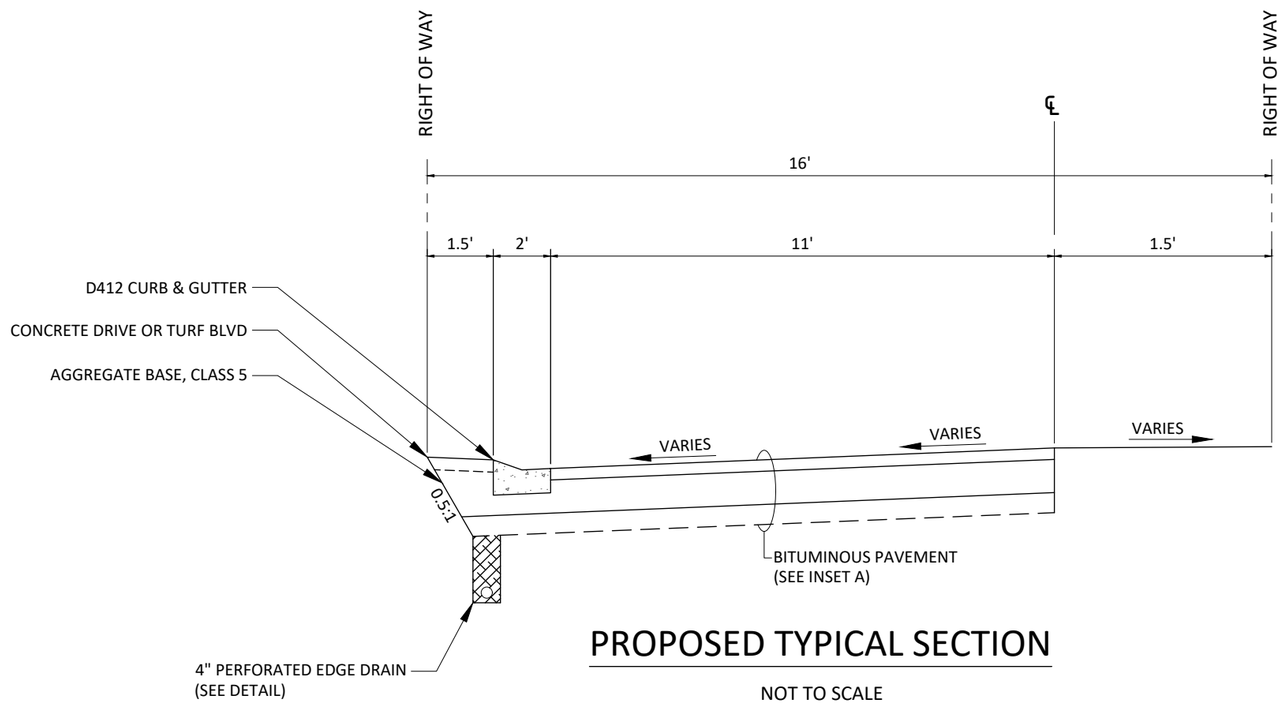

PROPOSED TYPICAL SECTION

NOT TO SCALE

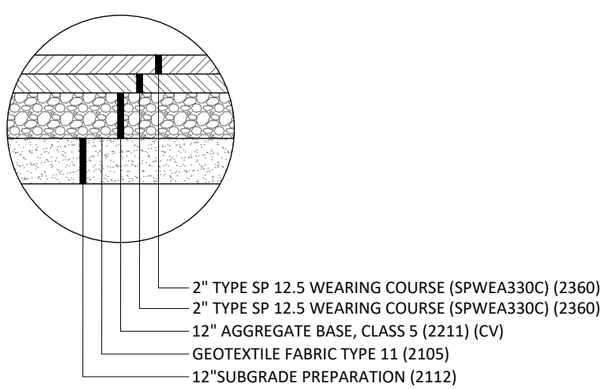

INSET A - BITUMINOUS PAVEMENT ALLEY AND ROADWAY

NOT TO SCALE

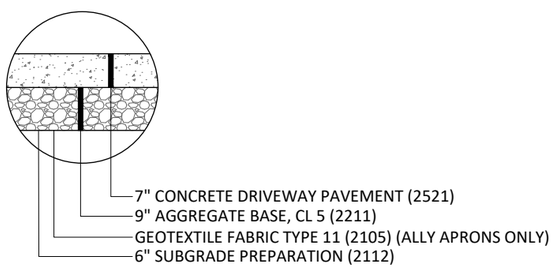

CONCRETE DRIVEWAY PAVEMENT

NOT TO SCALE

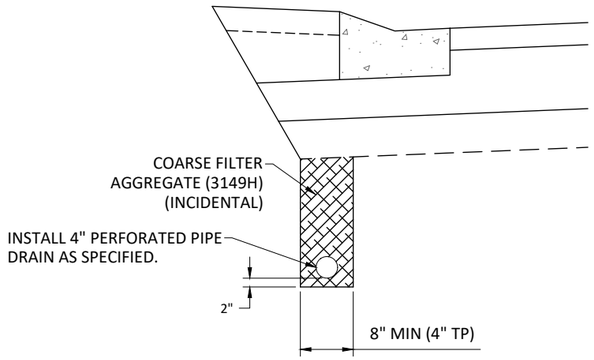

SUBSURFACE DRAIN DETAIL

NOT TO SCALE

H:\AURORA_CI_MN\0U1132223\CAD\C3D\FIGR-132223-PER-TYP SECTION.dwg 12/27/2023 12:15:09 PM