Real People. Real Solutions.

Fort Dodge, IA

Americans with Disabilities Act Self-Evaluation and Transition Plan

DRAFT – April 2024

Prepared by:
Bolton & Menk, Inc.
1519 Baltimore Drive
Ames, IA 50010
P: 515-233-6100

In collaboration with:
Slingshot Architecture
305 East Court Ave.
Des Moines, IA 50309
T 515-243-0074

[Page Intentionally Left Blank]

Table of Contents

I. Part I- City of Fort Dodge ada transition plan Introduction 1

A. Transition Plan Purpose & Need 1

B. ADA and its Relationship to Other Laws 1

C. City of Fort Dodge Requirements 1

D. Document Organization 2

II. Part II- City of Fort Dodge ADA Self-Evaluation & Transition Plan for Street Rights-of-Way 4

A. Self-Evaluation 4

B. Policies and Practices 8

C. Implementation Plan 10

D. ADA Coordinator 15

E. Public Outreach 15

F. ADA Grievance Procedure 16

G. Monitor Progress 16

III. Part III- City of Fort Dodge ADA Self-Evaluation & Transition Plan for Public Building & Park Facilities 16

A. Overview 16

B. City Of Fort Dodge Standards for Government Building Facilities 17

C. Municipal Building 23

D. Lake Side Municipal Golf Course - Club House 31

E. Fort Dodge Regional Airport 35

F. Blanden Memorial Art Museum 42

G. **Citizens Central – Senior Center** 32

H. Fort Dodge Public Library 38

I. Fire Department 43

J. City Of Fort Dodge Public Park Building Facilities 45

K. Scope Of Work 79

L. Buildings 79

M. PARKS 86

N. SUMMARY OF BUDGET COSTS 93

Appendices

Appendix A: ADA Deficiencies

Appendix B: ADA Self-Evaluation

Appendix C: ADA Transition Plan Projects referenced from the City of Fort Dodge Capital Improvements Plan

Appendix D: Public Outreach Results

Appendix E: ADA Grievance Procedure

Appendix F: ADA Coordinator Contact Information

Appendix G: ADA Design Standards and Procedures

Appendix H: ADA Policies and Practices Evaluation

Appendix I: 2014 Traffic Signal Systems Improvement Study: By Snyder & Associates

I. PART I- CITY OF FORT DODGE ADA TRANSITION PLAN INTRODUCTION

A. Transition Plan Purpose & Need

The Americans with Disabilities Act (ADA), enacted on July 26, 1990, is a civil rights law prohibiting discrimination against individuals on the basis of disability. ADA consists of five titles outlining protections in the following areas:

1. Employment
2. State and local government services
3. Public accommodations
4. Telecommunications
5. Miscellaneous Provisions

Title II of ADA pertains to the programs, activities and services public entities provide. As a provider of public transportation services and programs, the City of Fort Dodge must comply with this section of the Act as it specifically applies to public service agencies. Title II of ADA provides that, "…no qualified individual with a disability shall, by reason of such disability, be excluded from participation in or be denied the benefits of the services, programs, or activities of a public entity, or be subjected to discrimination by any such entity." (42 USC. Sec. 12132; 28 CFR. Sec. 35.130)

As required by Title II of ADA, 28 CFR. Part 35 Sec. 35.105 and Sec. 35.150, the City of Fort Dodge has conducted a self-evaluation of its facilities within public street rights-of-way and public facilities and has developed this Transition Plan detailing how the organization will ensure that these facilities are accessible to all individuals.

B. ADA and its Relationship to Other Laws

Title II of ADA is companion legislation to two previous federal statutes and regulations: the Architectural Barriers Acts of 1968 and Section 504 of the Rehabilitation Act of 1973.

The Architectural Barriers Act of 1968 is a federal law that requires facilities designed, built, altered or leased with Federal funds to be accessible. The Architectural Barriers Act marks one of the first efforts to ensure equitable access to the built environment.

Section 504 of the Rehabilitation Act of 1973 is a Federal law that protects qualified individuals from discrimination based on their disability. The nondiscrimination requirements of the law apply to employers and organizations that receive financial assistance from any Federal department or agency. Title II of ADA extended this coverage to all state and local government entities, regardless of whether they receive federal funding or not.

C. City of Fort Dodge Requirements

Under Title II, the City of Fort Dodge must meet these general requirements:

- Must operate their programs so that, when viewed in their entirety, the programs are accessible to and useable by individuals with disabilities [28 C.F.R. Sec. 35.150].
- May not refuse to allow a person with a disability to participate in a service, program or activity simply because the person has a disability [28 C.F.R. Sec. 35.130 (a)].
- Must make reasonable modifications to policies, practices and procedures that deny equal access to individuals with disabilities unless a fundamental alteration in the program would result [28 C.F.R. Sec. 35.130(b) (7)].
- May not provide services or benefits to individuals with disabilities through programs that are separate or different unless the separate or different measures are necessary to ensure that benefits and services are equally effective [28 C.F.R. Sec. 35.130(b)(1)(iv) & (d)].
- Must take appropriate steps to ensure that communications with applicants, participants and members of the public with disabilities are as effective as communications with others [29 C.F.R. Sec. 35.160(a)].
- Must designate at least one responsible employee to coordinate ADA compliance [28 C.F.R Sec. 35.107(a)]. This person is often referred to as the "ADA Coordinator." The public entity must provide the ADA coordinator's name, office address, and telephone number to all interested individuals [28 C.F.R Sec. 35.107(a)].
- Must provide notice of ADA requirements. All public entities, regardless of size, must provide information about the rights and protections of Title II to applicants, participants, beneficiaries, employees, and other interested persons [28 C.F.R Sec. 35.106]. The notice must include the identification of the employee serving as the ADA coordinator and must provide this information on an ongoing basis [28 C.F.R Sec. 107(a)].
- Must establish a grievance procedure. Public entities must adopt and publish grievance procedures providing for prompt and equitable resolution of complaints [28 C.F.R Sec. 35.107(b)]. This requirement provides for a timely resolution of all problems or conflicts related to ADA compliance before they escalate to litigation and/or the federal complaint process.

D. Document Organization

This introduction is Part I of a three-part document. Subsequent parts include:

- **Part II** – Part II provides the ADA Transition Plan for pedestrian facilities within street rights-of-way in the City of Fort Dodge. This section describes the Self-Evaluation methodology for identifying ADA deficiencies in policies, practices, and programs in public rights-of-way and provides a plan and schedule for the removal of these barriers.
- **Part III** – Part III provides ADA Transition Plan for each public buildings and

park facilities owned and operated by the City of Fort Dodge. Each facility is reported individually with instances of non-compliance identified, prioritization for their remediation, and estimated costs.

This document has been created to cover accessibility within the public street rights-of-way and city-owned building facilities. It does not include information on city programs, practices, or facilities not related to public rights-of-way or buildings not owned by the city.

A street sidewalk inventory is not included with this plan. Sidewalk improvements are recommended where sidewalks do not meet ADA standards for discontinuities, width, slope and other factors. Remediating these conditions should be coordinated with capital improvement projects and other future projects.

This document does not include an update to the 2017 assessment of the city's inventory of traffic signals and their status as accessible pedestrian signals (APS). Non-compliant signals should be coordinated with capital improvement projects and other future projects.

II. PART II- CITY OF FORT DODGE ADA SELF-EVALUATION & TRANSITION PLAN FOR STREET RIGHTS-OF-WAY

A. Self-Evaluation

1. Overview

The City of Fort Dodge is required, under Title II of the Americans with Disabilities Act (ADA) and 28 C.F.R Sec. 35.105, to perform a Self-Evaluation of current transportation infrastructure policies, practices, and programs. A Self-Evaluation identifies what policies and practices impact accessibility and examine how the city implements these policies. The goal of the Self-Evaluation is to verify that, in implementing the city's policies and practices, it is providing accessibility and not adversely affecting the full participation of individuals with disabilities. The Self-Evaluation identifies barriers to accessibility and provides a plan to remedy these barriers.

ADA Self-Evaluations generally cover the pedestrian circulation route/pedestrian accessible route (sidewalk and trails generally), curb ramps, parking lots, traffic control signals, and transit facilities that are located within public rights-of-way. Some of these attributes have not been reviewed with this Self-Evaluation and will be identified with future project scoping and implementation.

This Self-Evaluation examined the condition of the city's curb ramps, sidewalks and trails located in city parks, municipally owned parking lots, and buildings and facilities owned and maintained by the city. A 2017 study (2014 data) previously reviewed traffic signal compliance (see **Appendix I**).

2. Methodology

The Self-Evaluation field data inventory began in May 2020 and concluded in July 2020. During this time, project staff inventoried components of the Pedestrian Corridor Review / Pedestrian Accessibility Review (PCR/PAR) environment using the latest GPS technology to collect field data for pedestrian infrastructure features. Data was imported into Esri ArcGIS for analysis, reporting, and mapping as part of the Transition Plan. ADA accessibility evaluation included the following:

- *Pedestrian Ramps* – All pedestrian ramps were visually inventoried and evaluated for compliance. No field measurements were taken. Data collected for each pedestrian ramp includes general condition, landing size, ramp type, approximate slope, detectable warning system, and other required compliance information. Maintenance issues include vertical discontinuity, gaps, steep cross slope, cracking, standing water, vegetation, spalling, and others as shown in **Appendix A** of this document.

  Ramps received one of the following accessibility ratings based on the below criteria:

Table 1: Curb Ramp Accessibility Criteria

Rating	Criteria
1	Generally accessible: Uniform slopes, little to no noticeable cracks, only small vertical discontinuities, no spalling, joints intact, detectable warnings
2	Generally not accessible: Uneven or irregular slopes, large cracks, minor to excessive spalling, large and noticeable vertical discontinuities, deteriorated joints, no detectable warnings

To achieve ADA-compliance, a pedestrian ramp must also exhibit the following:

- Slope is less than 8.34% (1:12 rise to run ratio)
- Cross slope is less than or equal to 2% (1:50 ratio)
- Presence of a landing area greater than or equal to 4-feet by 4-feet and less than or equal to 2% cross slopes in all directions.
- An ADA-compliant detectable warning is present (i.e., truncated domes, brushed concrete, etc.). Public Right-of-Way Accessibility Guidelines (PROWAG) defines an ADA compliant warning as truncated domes extending the full width of a pedestrian ramp opening and differentiated in color from surrounding pavement.

Pedestrian ramps receiving a condition rating of 2 (generally not accessible) are not compliant with ADA and are candidates for future reconstruction projects. The timeline for modification of each of these pedestrian ramps will depend on its priority ranking, correlation to planned projects, reasonable accommodation requests, and available funding. Compliant and non-compliant pedestrian ramp locations are identified in **Appendix B**.

- *Sidewalks and Trails* – Sidewalk and trail maintenance issues include vertical discontinuity, gaps, cracking, standing water, vegetation, spalling, among others. Barriers to accessibility include items obstructing the PAR which could include hydrants, lighting/traffic signal poles, power poles, manhole/handhole, gate valves, and locations with a PCR/PAR which is too narrow, among others (see **Appendix A**).

  An assessment of general street sidewalk accessibility was not part of this Self-Evaluation. Only the sidewalks and trails within city parks were evaluated and given recommendations for prioritization.

  Sidewalks and trails received one of the following condition ratings based the above criteria:

Table 2: Sidewalk and Trail Accessibility Criteria

Rating	Condition
1	Generally accessible: Sidewalk is smooth with vertical discontinuities less than 1/2", and the surface is still passable
2	Generally not accessible: Sidewalk has vertical discontinuities more than 1/2", surface is crumbling, and the surface is unpassable for wheelchairs in multiple spots

An accessible sidewalk or trail must achieve a condition rating of 1. Sidewalk and trail segments rated 2 are not accessible and are candidates for future reconstruction projects. The timeline for modification identified sidewalks and trails will depend on its priority ranking, correlation to planned projects, reasonable accommodation requests, and available funding. Compliant and non-compliant pedestrian ramp locations are identified in **Appendix B**.

To achieve ADA-compliance, a sidewalk or trail must exhibit the following:

- Running slope is less than 5% (1:20 rise to run ratio), or may not exceed the general grade established for an adjacent street or highway
- Cross slope is less than 2% (1:50 ratio)
- Minimum continuous clear width of 4 feet with 5-foot x 5 foot passing spaces at a maximum interval of 200 feet
- Surfaces must be firm, stable, and slip resistant
- Vertical discontinuities are ½ inch or less, and discontinuities between ¼ and ½ inch shall be beveled at a slope not steeper than 50%
- Horizontal openings a maximum of 0.5 inches

- *Parking Lots* – Parking lots were inventoried and evaluated for accessibility. Information collected included number of spaces, number of accessible spaces, numbers of van-accessible spaces, signage, pavement markings, an accessible route connecting to PCR/PAR, and site route/connections. The conditions of each parking lot are provided in **Appendix B.**
- *Parks* – A field investigation of public parks was conducted to evaluate accessibility. Information collected included sidewalk/trail accessibility and ADA compliance of shelters and restrooms. Sidewalks and trails were evaluated in **Part II** of this document. Information related to park restroom accessibility and other features are detailed in **Part III** of this document.
- *Facilities* – Facilities including public buildings and spaces were also evaluated as part of this effort. This part of the evaluation is detailed in **Part III** of this document. Information collected as part of the facilities

evaluation includes interior/exterior accessible routes, and accessibility features of parking, entryways, building interiors, ramps, elevators, signs, doors, controls, seating, service counters, restrooms, drinking fountains, and fire alarms.

3. Summary

The City of Fort Dodge conducted the Self-Evaluation review of programs from May-July 2020. Results of the Self-Evaluation (pedestrian ramps and sidewalks/trails within parks) are shown in **Figure 1**. **Appendix B** provides detailed information on the results of the Self-Evaluation including an implementation plan for making the city's facilities accessible.

Figure 1. Self-Evaluation Results

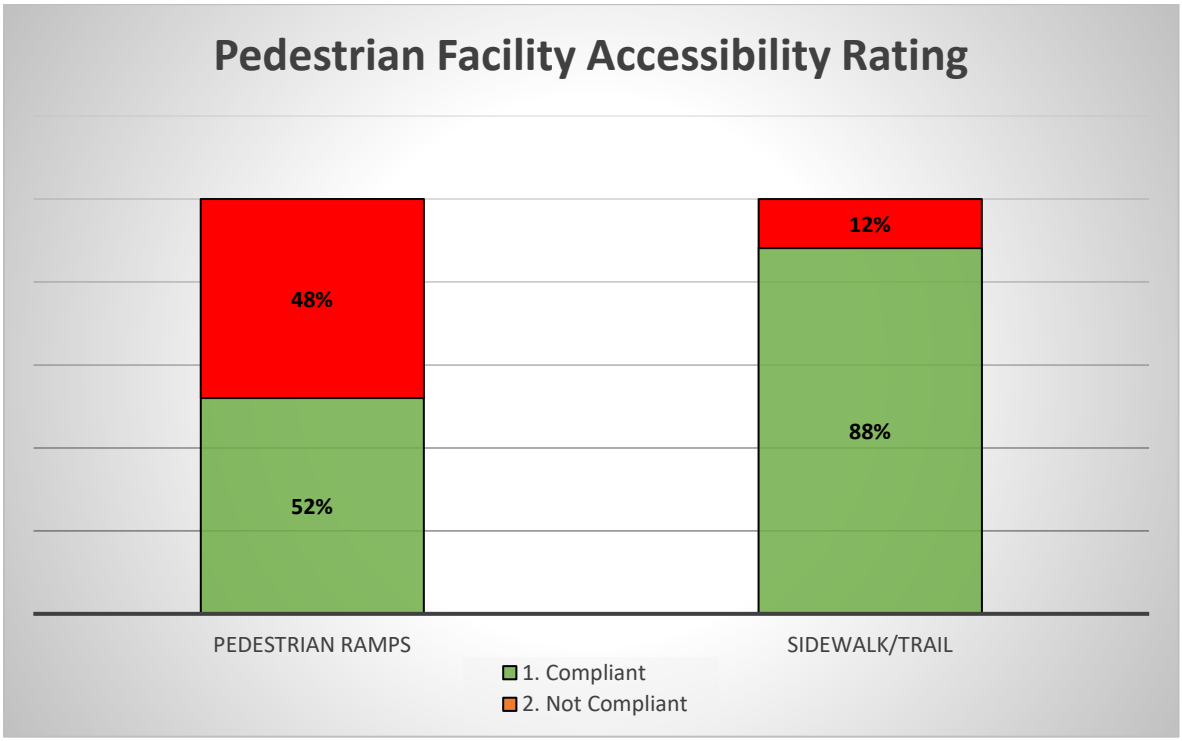

4. Additional Recommendations

The data collected for this Self-Evaluation was for pedestrian curb ramps and sidewalks and trails within city parks. It did not include an inventory of general sidewalks or traffic signal APS availability throughout the city, nor did it assess the accessibility of transit stops in the city. A 2014 traffic signal assessment was conducted for Fort Dodge, and is included as **Appendix I**.

Data collected as part of the Self-Evaluation survey were limited to visual assessment only; no field measurements were collected. This reduces the precision of the data and decreases the level of overall level of confidence that the findings are verifiably reflective of ADA-compliance. Fort Dodge will want to perform additional assessment of public sidewalks and traffic signals on

planned projects moving forward so it can properly scope the changes needed to bring these facilities into ADA compliance.

B. Policies and Practices

The City of Fort Dodge is required, under Title II of the ADA and 28 CFR 35.105, to perform a self-evaluation of its policies, practices, and programs. The goal of this Self-Evaluation is to verify that, in implementing the policies and practices, the city is providing accessibility and not adversely affecting the full participation of individuals with disabilities. The Self-Evaluation identifies policies and practices that affect accessibility and examine city implementation of these policies. The Self-Evaluation examines the condition of the city's curb ramps, and sidewalks and trails in city parks, identifying infrastructure needs (see **Appendix B**).

1. Previous Practices

Since the adoption of the ADA, the City of Fort Dodge has striven to provide accessible pedestrian features as part of the city's capital improvement projects. As additional information was made available as to the methods of providing accessible pedestrian features, the city updated its procedures to accommodate these methods.

This document reviewed a variety of plans and policies in its assessment of existing policy related to the provision of accessible infrastructure. A breakdown of these documents and related recommendations can be found in **Appendix H**. Documents reviewed include:

- Hike & Bike WC Bicycle, Pedestrian, & Trails Master Plan, Webster County & Fort Dodge, Iowa (2018)
- Fort Dodge Comprehensive Plan (2016)
- Des Moines River and Lizard Creek Water Trails Corridor Plan (2017)
- Northwest River District Neighborhood Revitalization Plan (2016)
- City of Fort Dodge Downtown Parking Study (2015)
- Fort Dodge Downtown Design Guidelines (2010)
- Fort Dodge Downtown Plain (2008)
- Business Highway 20/5th Avenue Corridors of Commerce Action Plan (2008)
- The City of Fort Dodge City Code

2. ADA Policy

The City of Fort Dodge will continue to provide accessible pedestrian design features as part of all city capital improvement projects. With this Self-Evaluation Plan, Fort Dodge adopts the U.S. Access Board's proposed Public Rights-of-Way Accessibility Guidelines (PROWAG) design standards and

procedures as listed in **Appendix G**. These standards and procedures will be kept up to date with nationwide and local best management practices.

The city will consider and respond to all accessibility improvement requests. All accessibility improvements that have been deemed reasonable will be scheduled consistent with transportation priorities and available financial resources. The city will coordinate with external agencies to ensure that all new or altered pedestrian facilities within the city's jurisdiction are ADA-compliant to the maximum extent feasible, and that other facilities subject to the jurisdiction of external agencies also be ADA-compliant.

Requests for accessibility improvements can be submitted to the City of Fort Dodge ADA Coordinator. The City of For Dodge adopts a formal ADA Grievance Procedure (**Appendix E**). Contact information for the ADA Coordinator is located in **Appendix F**.

Maintenance of pedestrian facilities within the public rights-of-way will continue to follow the policies set forth in city code and other documents (**see Appendix H**).

New Construction

All new street construction projects with pedestrian accommodations will be designed and constructed to conform with the most current ADA guidance and design practices to the maximum extent feasible.

Reconstruction Projects

All city street reconstruction projects with pedestrian accommodations will be designed and constructed in accordance with the most current ADA guidance and design practices to the maximum extent feasible.

Rehabilitation/Resurfacing Projects

All city major rehabilitation and resurfacing projects will include construction of missing or non-compliant pedestrian curb ramps as needed.

Curb ramps must be brought into compliance with roadway construction activities determined to be alterations per current US Department of Transportation / Department of Justice requirements. Alterations include new asphalt layers, mill and overlay, major rehabilitation and similar activities. Routine maintenance does not require curb ramp upgrades. Maintenance includes seal coats, crack filling/sealing, fog seals, pavement patching and similar activities.

Stand Alone Projects

As city funding or grant funding opportunities are available, independent ADA projects may be undertaken by the city. The ADA Self-Evaluation is the standard for determining prioritization of ADA stand-alone remediation.

Development Projects

The City of Fort Dodge will require infrastructure adjacent to new development and reconstruction to comply with ADA standards through its development review process.

C. Implementation Plan

1. Priority Areas

Data collected and evaluated for the public rights-of-way ADA evaluation were classified based on 3-tier prioritization process. A map depicting high and medium priority areas is included with this section (see **Figure 1**). Priority areas were established with the following criteria:

Priority Level 1 *– High Priority*

- Locations exhibiting accessibility barriers identified through the public process by stakeholders and the general public.
- Locations and roadway segments serving Level 1 facilities including:
    - Government facilities (city, city, state);
    - Public libraries;
    - Public and private primary and secondary schools (within a one-quarter mile radius from the school property);
    - Hospitals, health clinics and health centers (public and private);
    - Public housing and homeless shelters, including senior facilities and rehabilitation facilities;
    - Colleges, universities, and technical schools;
    - Transportation hubs (includes bus lines and transit stations);
    - Parks.

Priority Level 2 *– Medium Priority*

- Locations and roadway segments serving Level 2 facilities including:
    - Central business districts, shopping malls, supermarkets and strip retail centers;
    - Churches and Places of Worship;
    - Major employment sites;
    - Housing complexes, including apartments.

Priority Level 3 *– Lower Priority*

- Single-family residential areas;
- Industrial areas;
- Other areas not classified as Priority Level 1 and 2.

The City of Fort Dodge used the priority ranking outlined above to create the plan and schedule for ADA remediation activities to bring facilities into compliance. Reporting on the results of the Self-Evaluation is included in **Appendix B**.

Figure 1: ADA Prioritization Areas, Fort Dodge, IA

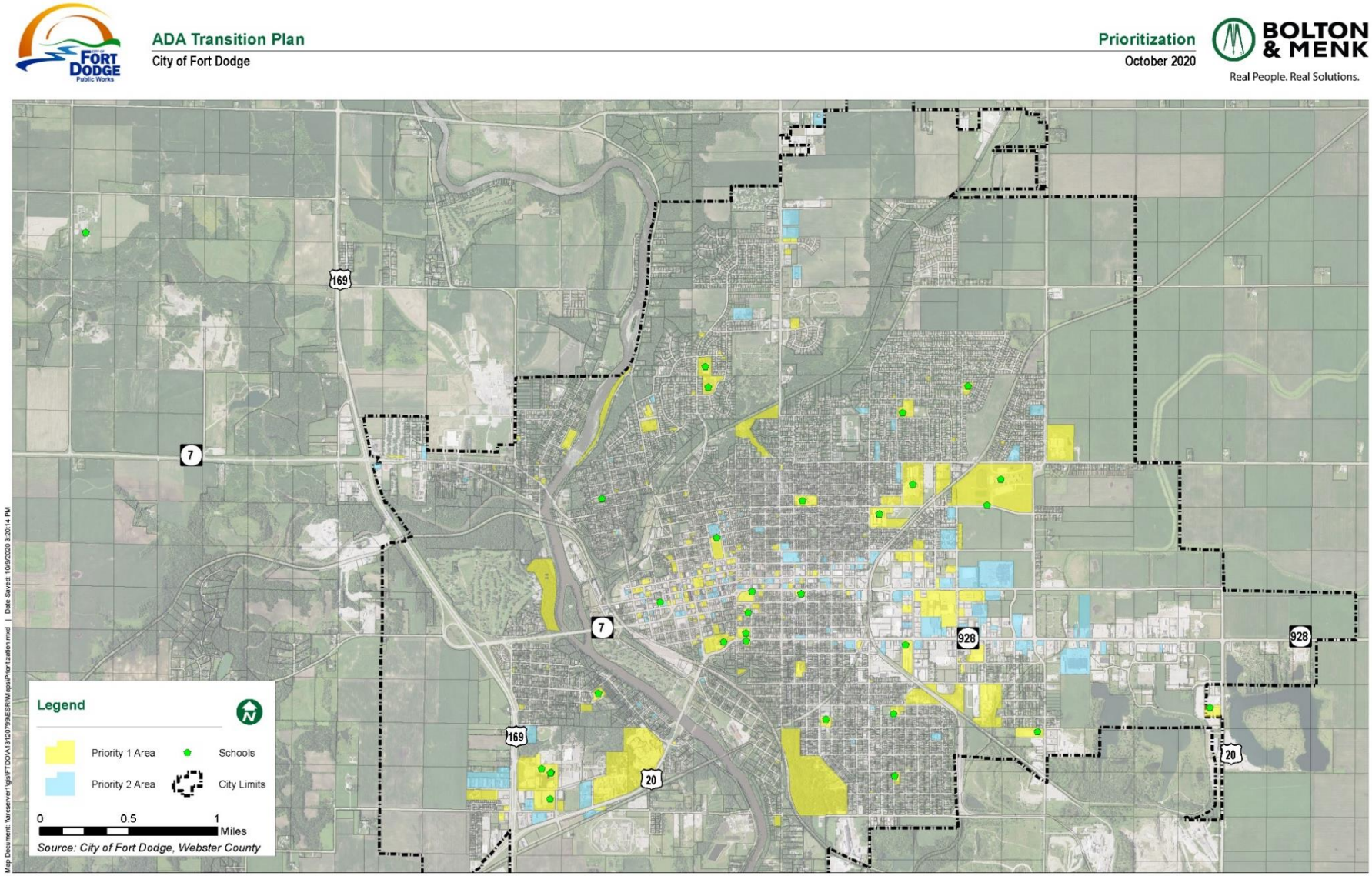

2. External Agency Coordination

Many other agencies are responsible for pedestrian facilities within the jurisdiction of the City of Fort Dodge. The city will coordinate with external agencies to develop ADA-compliant facilities, track progress over time, and work collaboratively to eliminate accessibility barriers to all public rights-of-way and public buildings in Fort Dodge.

3. Schedule

This Self-Evaluation estimates a total cost of $10.47M in ADA improvements necessary to bring pedestrian facilities throughout the city into ADA compliance. The city aims to achieve ADA compliance among these facilities responsibly and as expeditiously as possible, recognizing that $10.47M is a significant public investment and remediation will take time.

The city will utilize three methods for upgrading pedestrian facilities to the current ADA standards:

Capital Improvement

The most comprehensive method for upgrading facilities is through future street and utility capital improvement projects. Per ADA, roadway reconstruction/major alteration projects require all non-compliant pedestrian ramps to be replaced with ADA-compliant facilities within the project scope. This Self-Evaluation estimates that approximately $995,000 worth the total remediation cost is already scheduled in Fort Dodge's Capital Improvement Plan (2020-2024). This is nearly 10 percent of the ADA remediation need identified.

Stand-Alone Projects

Stand-alone projects ADA improvement projects may be incorporated into the Capital Improvement Plan on a case-by-case basis as determined by city staff. These may be paid for with city funding or grant resources as they are available.

Adjacent Development and Redevelopment

The city will require sidewalks and curb ramps adjacent to site redevelopment, new development, and cooperative agreement projects to be constructed to ADA standards.

New instances of non-compliance will surface regularly as normal wear-and-tear and extreme weather take their toll on pedestrian facilities. Periodic updates to this ADA Transition Plan document will be required to track progress. These conditions will likely prevent any city in Iowa from achieving 100% ADA compliance among facilities. However, deficiencies have been carefully prioritized in this plan to ensure remediation happens where it matters most. With this in mind, the city is committed to eliminating the deficiencies identified in this plan for municipal buildings and park structures at a cost of approximately $263,000.

The city has set the following implementation goals for improving the accessibility of its pedestrian facilities within its jurisdiction:

- After 10 years, 25% of accessibility features identified in this Plan would be improved.
- After 20 years, 50% of accessibility features identified in this Plan would be improved.
- After 30 years, 75% of accessibility features identified in this Plan would be improved.
- After 40 years, 100% of accessibility features identified in this Plan would be improved.

Note that the CIP will remediate a significant portion of non-compliant features in the first ten years.

The city anticipates updating this plan every five years to track progress and capture new instances of non-compliance. This plan serves as a framework for the city to follow and implementation goals will likely change as the city pursues ADA compliance.

4. Budget Information – Planning Level Costs

Construction costs for upgrading facilities can vary depending on each individual improvement and conditions of each site. Costs can also vary on the type and size of project the improvements are associated with. Listed below are representative costs for some typical accessibility improvements. These costs were used to generate planning level cost estimates for ADA improvement projects.

Table 2: ADA Remediation Unit Prices (2024)

Unit Prices (2021 Dollars)		
Description	**Unit**	**Per Unit Cost**
Pedestrian Ramp Construction	Ramp	$7,200
Ramp Detectable Warning Only	Ramp	$1,200
Traffic Control Signal APS Upgrade Retrofit	Per Corner	$8,400
Parking Lot ADA Remediation	Per accessible parking stall, including accessible aisle and new curb ramp	$5,400
Sidewalk/Trail ADA Reconstruction (concrete or bituminous)	Sq. Ft.	$7.20
Sidewalk/Trail ADA Barrier Remediation	Sq. Ft.	$9.60

5. Undue Financial Burden

The ADA includes a stipulation [28 CFR 35.150(a)(3)] for a requirement that would cause significant difficulty or expense to be carried out. This means that local agencies such as the City of Fort Dodge do not have to provide a modification to infrastructure if providing it would cause a significant administrative or financial difficulty. The undue burden standard takes into account overall cost or operational challenges. If a change is considered an undue burden, the agency is required to look for an effective alternative.

Under the 28 CFR 35.150(a)(3), if a public agency believes and can demonstrate that a requested action to make a facility accessible would result in a fundamental alteration in the nature of a service, program, or activity or in undue financial burden, "*…a public agency has the burden of proving that compliance with §35.150(a) would result in such alteration or burdens. The decision that compliance would result in such alteration or burdens must be made by the head of a public entity or his or her designee after considering all resources available for use in the funding and operation of the service, program, or activity, and must be accompanied by a written statement of the reasons for reaching that conclusion…*" (www.ecfr.gov).

The City of Fort Dodge plans to meet this challenge by ensuring future pedestrian infrastructure is constructed according to ADA standards from the start and remediation known instances of non-compliance in a systematic manner. ensuring the safety and accessibility of pedestrian infrastructure and avoiding future potential for undue financial burden.

D. ADA Coordinator

In accordance with 28 CFR 35.107(a), the City of Fort Dodge has identified an ADA Title II Coordinator to oversee the city's policies and procedures. Contact information for this individual is in **Appendix F.**

E. Public Outreach

The City of Fort Dodge recognizes that public participation is an important component in the development of this document. Input from the community has been gathered and used to help define priority areas for improvements within the public rights-of-way of the City of Fort Dodge.

Public outreach for the creation of this document consisted of the following activities:

City Website

A city website was established early in the process in 2019, that provided the public an opportunity to submit comments on areas in the community they find problematic.

- Fort Dodge ADA Transition Plan Webpage (https://www.fortdodgeiowa.org/department/division.php?structureid=224)
- Public Comment Website [consultant] (https://clients.bolton-menk.com/fortdodgeada/)

This document was available for public comment online between the dates of XX --XX, 2024. Information regarding the public outreach activities is in **Appendix D**.

A meeting summary can be seen in **Appendix D.**

F. ADA Grievance Procedure

Under the Americans with Disabilities Act, each agency is required to publish its responsibilities in regard to the ADA. If users of the City of Fort Dodge facilities and services believe the city has not provided reasonable accommodation, they have the right to file a grievance.

In accordance with 28 CFR 35.107(b), the city has developed a grievance procedure for the prompt and equitable resolution of citizens' complaints, concerns, comments, and other grievances. This grievance procedure can be found in **Appendix E**.

G. Monitor Progress

This document will be updated as needed to reflect the City of Fort Dodge's approach to complying with ADA and providing accessible pedestrian infrastructure. The appendices in this document will be updated periodically to account for improvements, while the main body of the document will be updated within five to ten years with a future update schedule to be developed at that time. With each main body update, a public comment period will be established to continue the public outreach.

III. PART III- CITY OF FORT DODGE ADA SELF-EVALUATION & TRANSITION PLAN FOR PUBLIC BUILDING & PARK FACILITIES

A. Overview

As part of the City of Fort Dodge ADA Transition Plan, the City evaluated government buildings and other public buildings and facilities within City parks such as restroom facilities, park shelters, and community buildings. The following public facilities were inventoried:

1. City of Fort Dodge Government Building Facilities
   - City of Fort Dodge Municipal Building – 819 1st Ave
   - City of Fort Dodge Lakeside Municipal Golf Course & Club House– 1417 Nelson Ave
   - Fort Dodge Regional Airport – 1639 Nelson Ave #2

- Bladen Memorial Art Museum – 920 3rd Ave S
- Citizen's Central Senior Center – 617 Central Ave
- City of Fort Dodge Public Library – 424 Central Ave
- City of Fort Dodge Fire Department – 1515 Central Ave
- Oleson Park - 1400 Oleson Park Ave
- Bus Shelter – 21 S 9th St

2. City of Fort Dodge Public Park Building Facilities

- City of Fort Dodge Aquatic Center – 1111 N 32nd St
- Snell-Crawford Park – 1404 Park St
- Loomis Park – N 7th St & Loomis Park Dr
- Harlan Rogers Sports Complex – 1628 Nelson Ave
- Olson Park – 12th Ave S & S 17th St
- Hydro-Electric Park – 819 1st S Ave

The following pages include facility-specific ADA Self-Evaluation checklists for each facility:

B. City Of Fort Dodge Standards for Government Building Facilities

1. Introduction

Standards issued under the Americans with Disabilities Act (ADA) address access in new construction and alterations to state and local government facilities, places of public accommodation, and commercial facilities. Access to recreation facilities, including play areas, swimming pools, sports facilities, fishing piers, boating facilities,golf courses, and amusement rides is addressed in the ADA.

Among other things, the ADA ensures access to the built environment for people with disabilities. The ADA Standards establish design requirements for the construction and alteration of facilities subject to the law. These enforceable standards apply to places of public accommodation, commercial facilities, and state and local government facilities.

The Access Board is responsible for developing and updating design guidelines known as the ADA Accessibility Guidelines (ADAAG). These guidelines are used by the Department of Justice (DOJ) and the Department of Transportation (DOT) in setting enforceable standards that the public must follow. Both DOJ's and DOT's current ADA Standards are based on the Access Board's updated ADAAG (2004). As a result, for the most part, these two sets of standards are very similar. However, each contains additional requirements that are specific to the facilitiescovered by the respective agencies. These additional requirements define the types of facilities covered, set effective dates, and provide additional scoping or technical requirements for those facilities. DOJ's

ADA Standards apply to all facilities except public transportation facilities, which are subject to DOT's ADA Standards. The edition of the ADA Standards provided here on the Access Board's website includes DOJ's and DOT's additional provisions.

Public entities are not required to make all existing facilities fully accessible. In the section below, "Alterations to Existing Facilities", the triggers and priorities are defined with technical feasibility and disproportioned costs considered. A public entity may provide access to programs by offering an alternative at a different location per Title II and Title III.

2. Department of Justice ADA Standards (2010)

a) State and Local Government Facilities

Units of government at the state, county, and local levels are subject to the ADA and must comply with the ADA Standards in new construction and alterations. All types of public facilities are covered, including schools, hospitals, public housing, courthouses, and prisons.

DOJ's 2010 ADA Standards for Accessible Design became effective March 15, 2012 and apply to all facilities covered by the ADA except public transit facilities. This includes state and local government facilities subject to Title II and places of public accommodation and commercial facilities under Title III.

As implemented under Title II, the 2010 Standards consist of the regulatory provisions in 28 CFR §35.151 and appropriate sections of the Access Board's 2004 ADA Accessibility Guidelines (36 CFR part 1191, appendices B and D).
https://www.ada.gov/regs2010/titleII_2010/titleII_2010_regulations.htm

3. Construction and Manufacturing Tolerances

A tolerance is an unintended, but permitted (i.e., "tolerated"), variation from a specified dimension resulting from the process of construction or manufacture. The ADA Standards recognize conventional industry tolerances for dimensions not expressed as a range. This applies to field work, not design work. Tolerances necessary for a particular manufacturing process are also permitted. Information on specific tolerances may be available from industry and trade organizations, code groups and building officials, and published references. Many dimensions in the ADA Standards are expressed as a range instead of an absolute so that designers can allow some room for minor deviations in construction or manufacturing. Tolerances do not apply to dimensions specified as a range.

4. Furnishings and Equipment

The DOJ and DOT ADA Standards, like most building requirements and codes, apply to those elements that are fixed or built-in. Moveable elements and furnishings are generally not addressed or covered by the ADA Standards. DOJ's

ADA regulations include requirements that may impact non-fixed elements, such as providing accessible medical equipment, including examination tables and chairs, to provide persons with disabilities effective access to health services. In addition, placement of non-fixed elements can affect the accessibility of an area by encroaching into accessible routes and clearances.

5. Alterations to Existing Facilities

Alterations are defined in the standards as "a change in a building or facility that affects or could affect the usability of a building or facility or portion thereof." Many types of projects are covered as "alterations," including remodeling, renovation, rehabilitation, reconstruction, restoration, resurfacing of circulation paths or vehicular ways, and changes or rearrangement of structural parts, elements, or walls. Normal maintenance, reroofing, painting or wallpapering, or changes to mechanical and electrical systems are not considered alterations unless they affect a facility's usability. For example, a project limited to an HVAC system that includes the addition of thermostats would affect a facility's usability because it involves elements (operable parts) covered by the standards.

The standards ensure that the opportunities for accessibility presented by an alteration are taken. How and to what extent the standards apply is determined by the scope of a project and the elements and spaces altered. Only those elements or spaces altered are required to comply, but alterations made to areas containing a primary function (a major activity for which a facility is intended) also require an accessible path of travel.

If alterations are limited only to elements in a room or space, then the standards apply only to the elements altered. Similarly, where spaces are altered, the standards apply to those spaces that are altered. If a room or space is completely altered (or built new as part of an alteration), the entire room or space is fully subject to the standards. Compliance is required to the extent that it is technically feasible.

6. Technical Infeasibility

Compliance in an alteration is not required where it is "technically infeasible." The term is defined as "something that has little likelihood of being accomplished because existing structural conditions would require removing or altering a load-bearing member that is an essential part of the structural frame; or because other existing physical or site constraints prohibit modification or addition of elements, spaces, or features that are in full and strict compliance with the minimum requirements."

Where technical infeasibility is encountered, compliance is still required to the maximum extent technically feasible.

7. Alterations Affecting Primary Function Areas

Additional requirements apply when alterations are made to areas containing a "primary function," which is a major activity intended for a facility. Examples

of primary function areas include dining areas of a restaurant, retail space in a store, exam rooms in a doctor's office, classrooms in a school, and offices and other work areas where the activities of a covered entity are carried out. Spaces not considered primary function areas include entrances, corridors, restrooms, break rooms, employee locker rooms, and mechanical or electrical closets. Restrooms are not primary function areas unless their provision is the primary purpose of a facility, such as a highway rest stop.

8. Accessible Path of Travel

When alterations are made to a primary function area, an accessible path of travel to the area must be provided. The accessible path of travel must extend from the altered primary function area to site arrival points, including public sidewalks and parking and passenger loading zones provided on the site. The path of travel also includes access to restrooms, telephones, and drinking fountains, where provided to serve the primary function area. In leased facilities, alterations made by a tenant to primary function areas that only the tenant occupies do not trigger a path of travel obligation upon the landlord with respect to areas of the facility under the landlord's authority if those areas are not otherwise being altered.

9. Disproportionality (20%)

The accessible path of travel is required to the extent that it is not "disproportionate" to the total cost. Regulations implementing the standards define "disproportionate" as exceeding 20% of the total cost of alterations to the primary function area. The 20% cap applies only to costs associated with the accessible path of travel, including an accessible route to the primary function area from site arrival points, entrances, and retrofits to restrooms, telephones, and drinking fountains.

10. Prioritization

Compliance is required up to the point the 20% cost cap is reached, even where it does not result in a fully accessible path of travel. Where costs exceed this cap, compliance should be prioritized in this order:

1. an accessible entrance
2. an accessible route to the primary function area
3. restroom access
4. an accessible telephone
5. an accessible drinking fountain
6. access to other elements such as parking and storage

11. References:

United State Access Board: https://www.access-board.gov/

ADA Guidance for State and Local Government (Title II): https://www.ada.gov/ada_title_II.htm

City of Fort Dodge ADA Self-Evaluation & Transition Plan for Public Buildings

C. Municipal Building

819 1st Avenue, Fort Dodge, IA 50501

Constructed 1914)

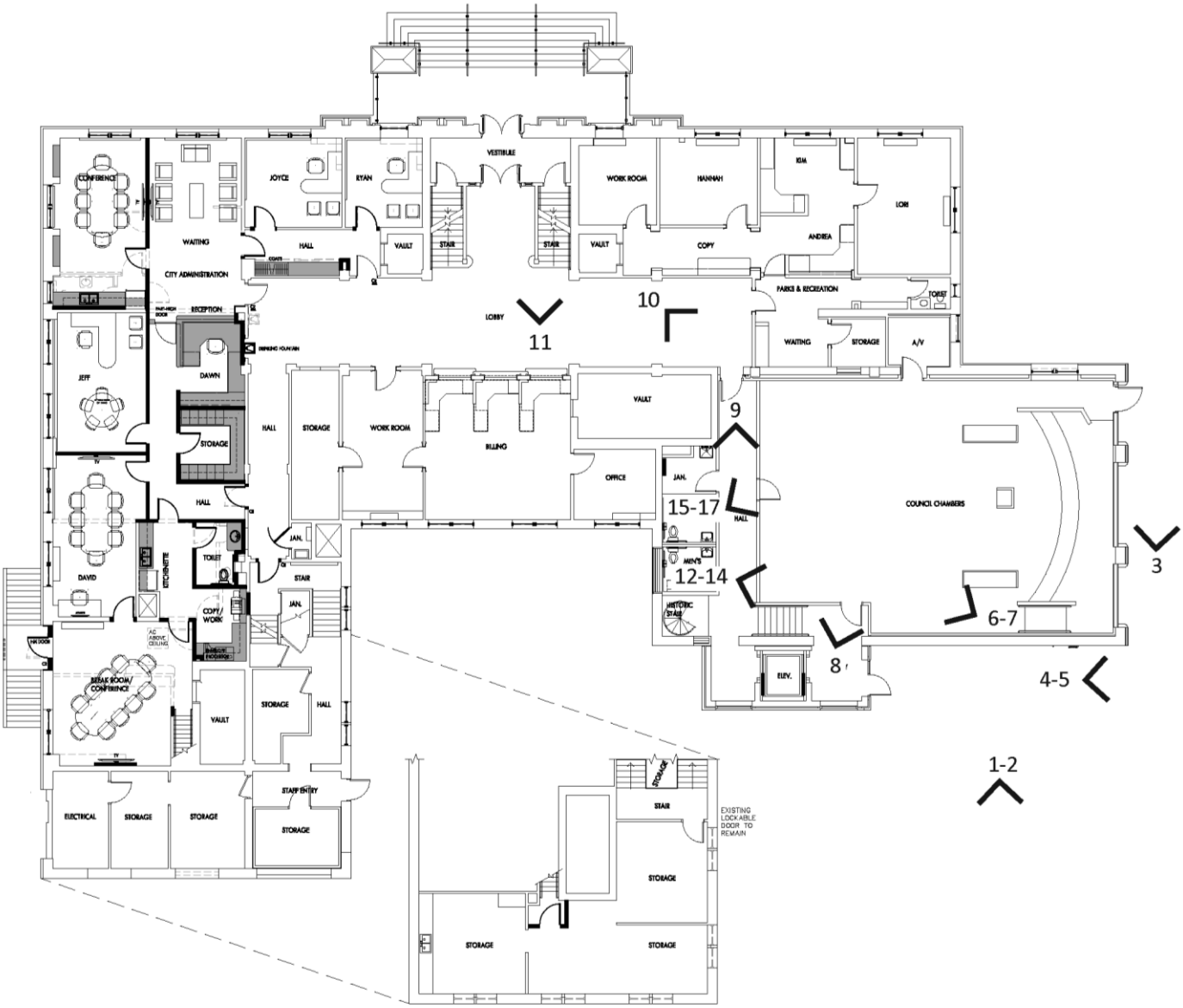

First Level

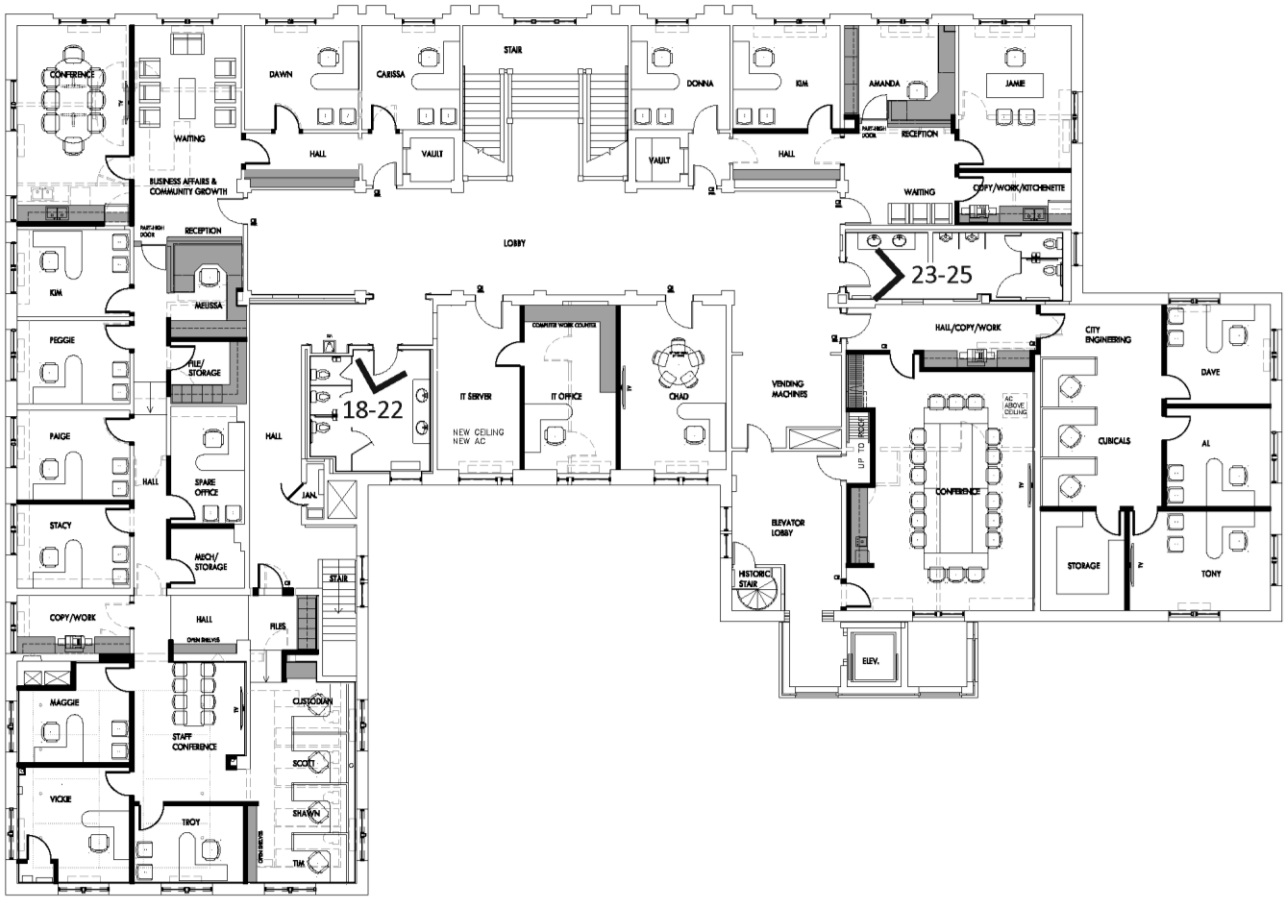

Second Level

1

2

Existing van and accessible stall are complaint with the standards. Recommendation to repaint striping.

3

4

5

Accessible signage is provided to direct the public to the accessible entrance.

Existing door operator is compliant with the standards.

6

7

Slope of the ramp within council chambers exceeds the maximum rise over run within the standards. Existing slope is 9.72%, code allows for maximum 1:12 (8.33%). Additionally, handrails are required to extend min 12 beyond extent of the ramp at thetop and bottom of the ramp.

8

Existing elevator and signage arecompliant with the standards.

9

Existing automatic door opener is compliant with the standards.

10

Existing Emergency Defibrillator is installed at location not compliant with protruding objects standards. The code allows for a maximum 4” protrusion when installed between 27”-80” from the finish floor. Recommendation is to install cane protection under cabinet or relocate emergency defibrillator.

11

Existing front desk is compliant with the standards.

12

13

Existing room fixtures are compliant to the standards.

14

Verify baby changer when at an open position. The surface must be maximum 34” above finish floor. When at an open position allows for a minimum 27” knee clearance.

15

Existing room fixtures are compliant to the standards.

16

Proper clear floor area for the pull side of the door is not provided. Existing conditions allow for 17”, while the standards require a min of 18”. To comply with the requirements one of two options can be pursued. 1. Move door 1” further from the sink. 2. Alter the door to swing out. This option would need to be verified

17

with corridor width requirements. Verify baby changer when at an open position. The surface must be maximum34” above finish floor. When at an openposition allows for a minimum 27” knee clearance.

18

Existing water fountain is compliant with the standards.

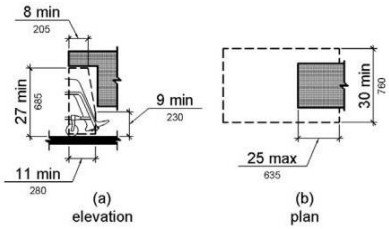

Figure 306.3
Knee Clearance

19

Existing shroud is not compliant with the standards. Only 7” is provided before the shroud decreases the knee clearance. Per the diagram above, 8” is required. Additional shroud does not provide a min 9” clear for toe clearance.

20

Existing paper towel is within the reach ranges but location of trash interferes with the accessible route. Recommendation to move the existing trash can.

21

Existing mirror installation is not compliant with the requirements. Mirrors located above lavatories or countertops shall be installed with the bottom edge of the reflecting surface 40” maximum above the finish floor or ground. Recommendation to lower all mirrors to comply with accessible codes.

22

Rear grab bar is not installed per the standards. A minimum 12’’ overlap from centerline of toilet to grab bar is required. Existing provides 10.5” overlap. Recommendation to relocate existing grab bar. Additionally grab bars are installed above the maximum heights. Recommendation to lower grab bars to be within 33-36” above finishfloor.

23

Proper clear floor area for the pull side of the door is not provided. Existing conditions allows for 17”, while the standards require a min of 18”. To comply with the requirements one of two options can be pursued: 1. Move door 1” further from the sink. 2. Alter the door to swing out. This option would need to be verified with corridor width requirements.

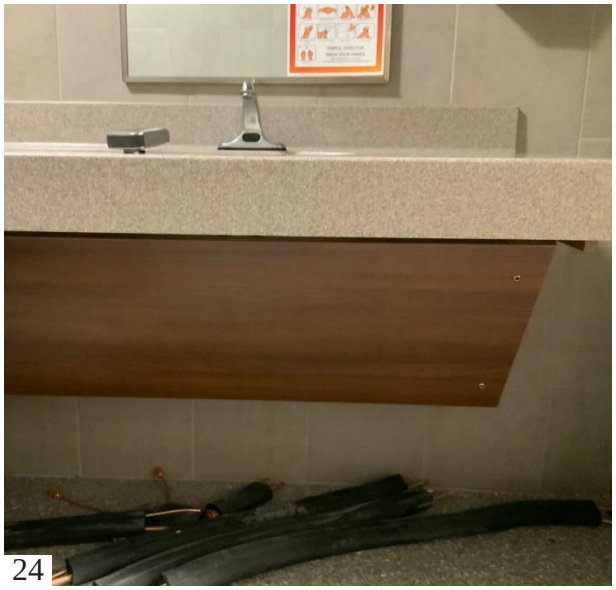

24

Existing mirror installation is not compliant with the requirements. Mirrors located above lavatories or countertops shall be installed with the bottom edge of the reflecting surface 40” maximum above the finish floor or ground. Recommendation to lower all mirrors to comply with accessible codes.

25

Rear grab bar is not installed per the standards. A minimum 12’’ overlap from centerline of toilet to grab bar is required. Existing provides 10.5” overlap. Additionally grab bars are installed above the maximum heights. Recommendation is to relocate existing grab bars and lower grab bars to be within 33-36” above finish floor.

D. Lake Side Municipal Golf Course - Club House

1417 Nelson Avenue, Fort Dodge, IA 50501

Constructed 1991)

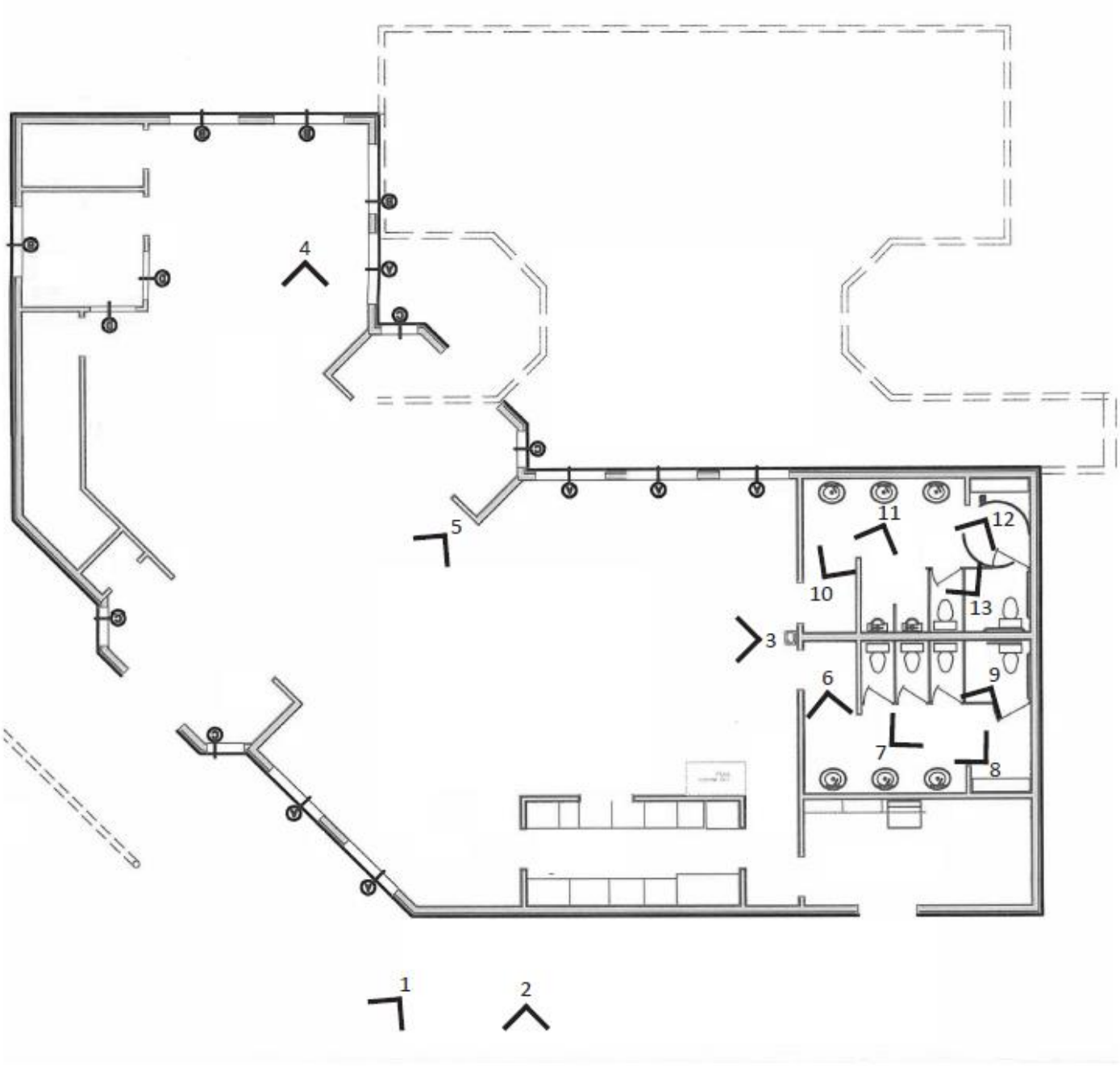

1

2

Existing accessible parking stalls do not meet accessible requirement. All accessible stalls must be paired with an access aisle. Recommendation to re-stripe and reconfigure the two accessible stalls to provide the following: van-accessible stall meeting one of the two options, at least 11 feet wide with an access aisle at least 5 feet, or at least 8 feet wide an accessible aisle at least 8 feet. The second accessible parking shall be at least 8 feet wide and share the provided access aisle with the van-accessible stall. The access aisle shall adjoin an accessible route connecting parking spaces to accessible entrances.

3

Existing water fountain is complaint with accessible requirements with the exception of protruding objects. Recommendation to install a cane protection at the water fountain.

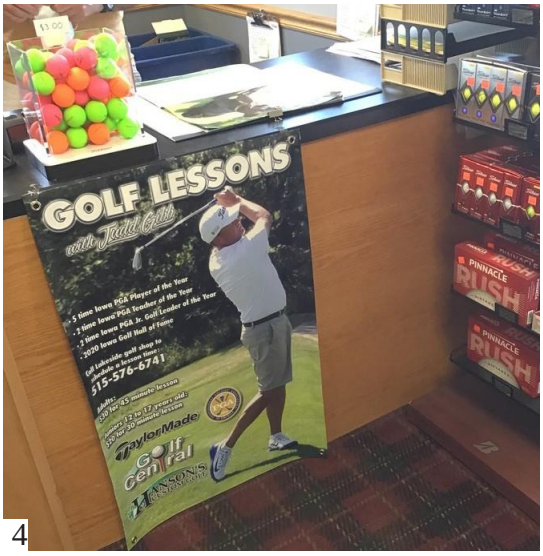

4

Existing sales and service counter meets the requirements of min 36” wide and maximum 36” above finish floor.

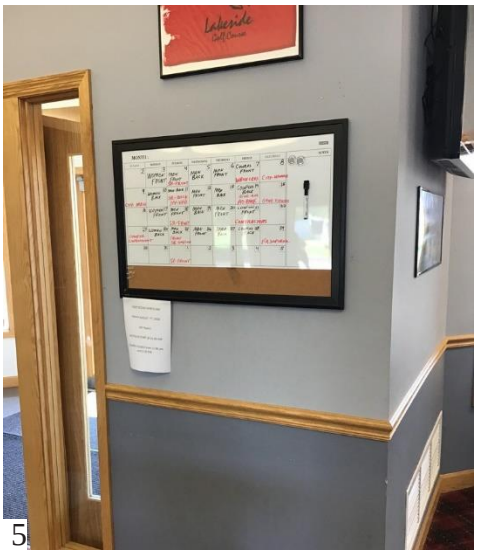

5

If calendar is used by the public, then calendar should be lowered to be within the reach ranges, maximum 48” above finish floor.

6

Sufficient door clearance is not provided at the door. Min 48” is required, while 45.75” is provided.

Existing door signage is installed with the lowest character 62” above the floor. Per ADA, lowest character shall be installed min 48” and max 60” above finish floor. Recommendation to lower the sign by minimum 2”.

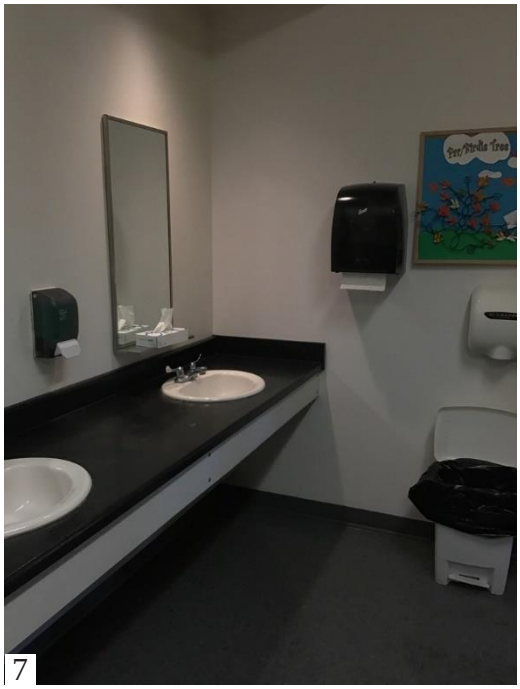

7

Existing vanity is compliant.
Mirrors are installed at 41.5” from floor to reflective surface. Recommend to lower mirror minimum 1.5” to meet the ADA requirements.
Paper towel dispenser is installed 52” to the operative parts. Recommendation to either lower the dispenser by 4” to meet maximum 48” requirements or relocate trash container to not impede on accessible clearances to hand dryer within the accessible reach range.

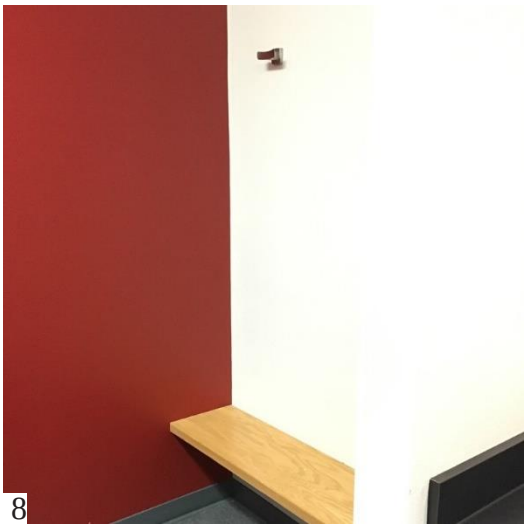

8

Hook at bench is above the accessible reach range. Recommendation to reinstall at a maximum of 48” above finish floor.

9

Toilet has been installed too far from the side wall. Per ADA, 16-18” is acceptable from centerline of toilet to wall. Existing conditions are 20”.
Existing hook is above accessible reach range. Recommendation to reinstall at a maximum of 48” above finish floor.

10

Sufficient door clearance is not provided at the door. Min 48” is required, while 45.75” is provided.

Existing door signage is installed with the lowest character 62” above the floor. Per ADA, lowest character shall be installed min 48” and max 60” above finish floor. Recommendation to lower the sign by minimum 2”.

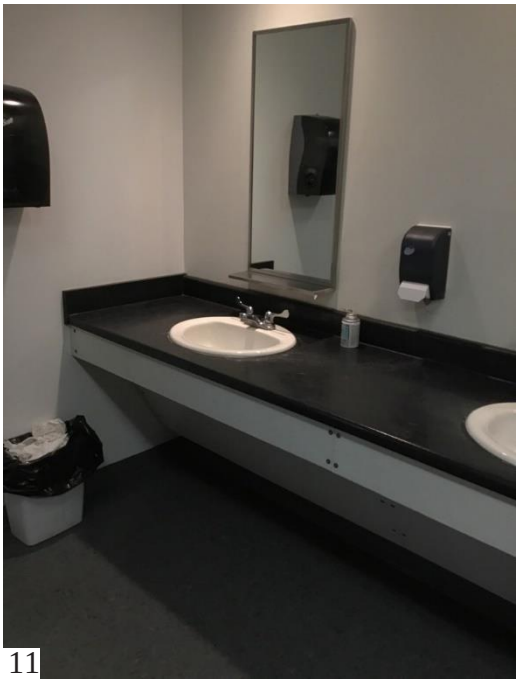

11

Existing Vanity is compliant.
Mirrors are installed at 41.5” from floor to reflective surface. Recommendation to of lower mirror minimum 1.5” to meet the ADA requirements.
Paper towel dispenser is installed 52” to the operative parts. Recommendation to either lower the dispenser by 4” to meet maximum 48” requirements or relocate trash to not impede on accessible clearances to hand dryer within the accessible reach range.

12

Hook at bench is above the accessible reach range. Recommendation to reinstall at a maximum of 48” above finish floor.

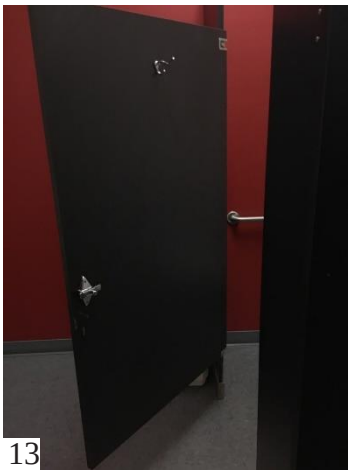

13

14

Toilet has been installed too far from the side wall. Per ADA, 16-18” is acceptable from centerline of toilet to wall. Existing conditions are 20”.
Toilet flush valve is installed on the wrong side of the toilet. Replace toilet with flush valve on the other side and correct distance to wall.
Existing hook is installed above 48” above finish floor.

E. Fort Dodge Regional Airport

1639 Nelson Ave #2, Fort Dodge, IA 50501

Constructed 1997; Expanded 2014

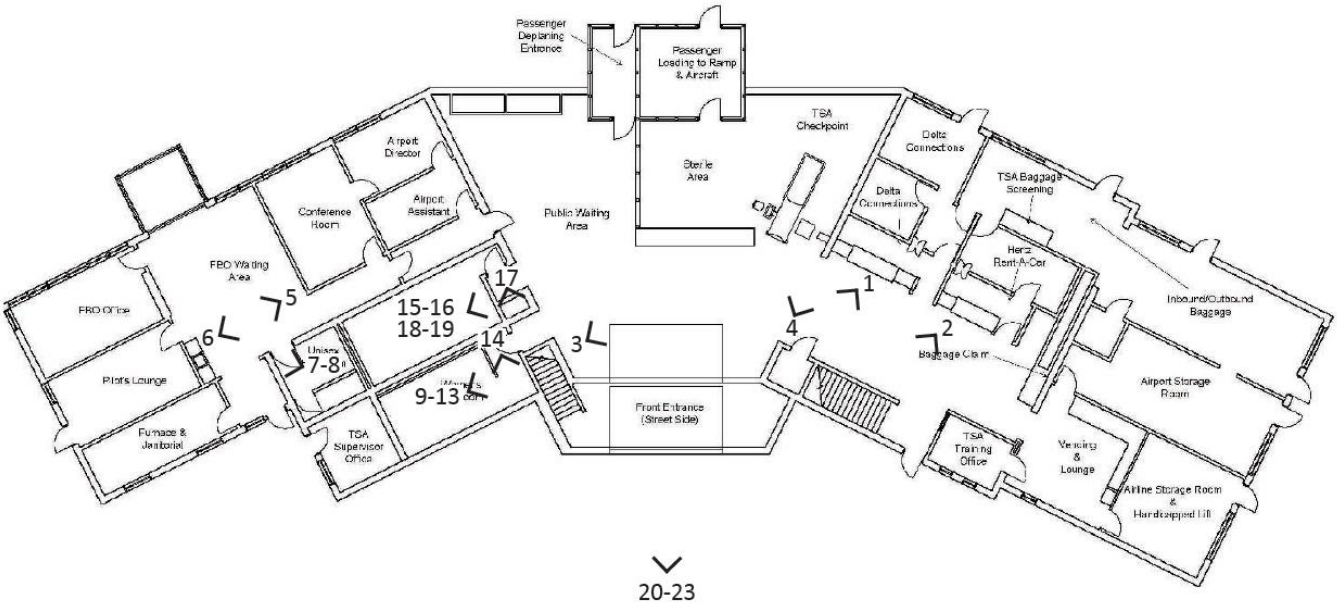

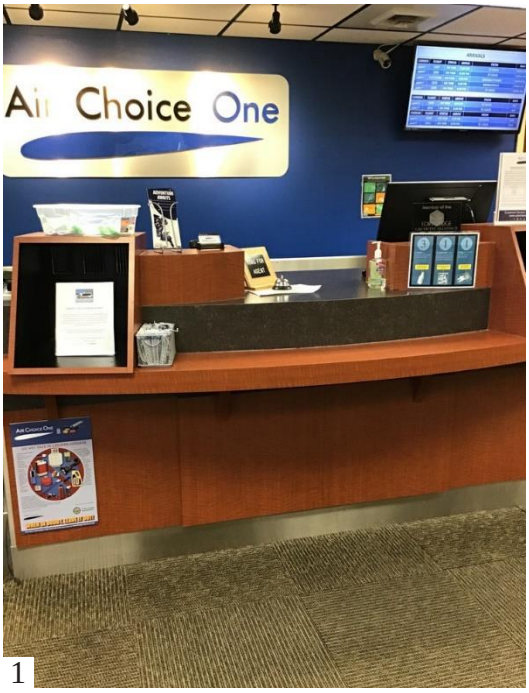

1

1

2

Existing Accessible Service Counters meet the requirements for a side approach. The accessible counter depth may be in conflict with the standards. The depth of accessible portion of the counter top shall extend the same depth as the sales or service counter top. The accessible counter is only 9.5” deep while the higher counter is deeper. If the public use area of the high counter top exceeds 9.5”, then the depth of the accessible counter is not compliant with standards.

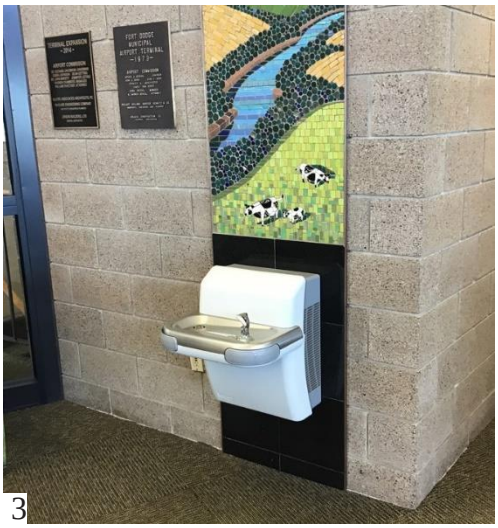

3

Existing water fountain location is compliant with the standards. Existing water fountain does not provide proper knee clearances per the requirements. Recommend raising the water fountain by minimum 1”. When making modifications, confirm the height of spout does not exceed 36”.

Cane detection is required to be added on both sides of the water fountain.

4

Existing emergency defibrillator is installed at location not compliant with protruding objects standards. The code allows for a maximum 4” protrusion when installed between 27”-80” from the finish floor. Recommendation to install cane protection between the door and the box.

5

Existing employee work surface is compliant with standards.

6

Existing kitchenette counter is installed at 35”; exceeding the standards by 1”. Recommendation to provide a 34” tall countertop at the sink

7

Existing toilet is located 18.5” from the centerline of toilet to the side wall. This exceeds the maximum requirements of the standards (16”- 18). All grab bars meet the requirements. Height of hook is installed above accessible reach ranges per the standards. Recommendation to lower the hook to a maximum of 48” above the finish floor.

8

Existing height of the paper towel dispenser is above the accessible reach ranges per the standards. Recommend to either lower the existing dispenser to a maximum 48” above finish floor. 48” measurement shall be taken from location of paper towels within the dispenser. Alternate solution is to provide a secondary paper towel dispenser within the reach range.

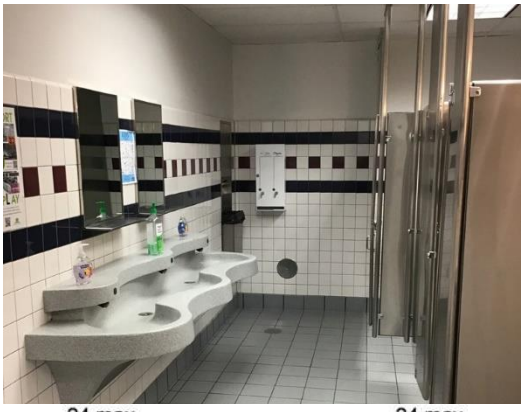

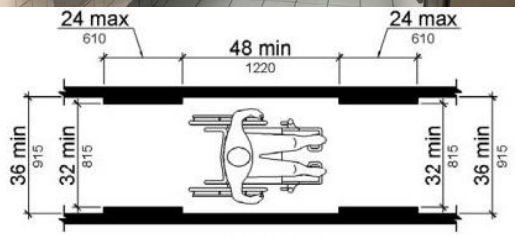

9 **Figure 403.5.1**
Clear Width of an Accessible Route

The existing width between the sink to accessible stall is not compliant with the clear width retirements. The existing width is 31”. Per standards (clear width diagram above) the clear width can be reduced to 32” for a maximum 24” length. As the accessible stall is oversized for wall hung toilet, recommendation to decrease the size of the stall by min 1” to meet the requirements atthe sinks. Minimum clearance for the accessible stall is 56”.

12

Existing mirror and counter are compliant with the requirements.
Mirrors above the sinks are not in compliance with standards. Mirrors above the sink are installed 48” to the reflective surface. Mirrors located above lavatories or countertops shall be installed with the bottom edge of the reflecting surface 40” maximum above the finish floor or ground.

10

Baby changer does not provide accessible knee clearance. 20” clearance is provided. Recommendation is to raise the height of the station to provide minimum 27” knee clearance. When raising the height
confirm baby changer at an open positionis not above 34”.

13

Existing toilet is located 15” from the centerline of toilet to the side wall. This is less than the requirements (16”- 18 from wall). All grab bars meet standards. Existing flush valve is on the wrong side of the toilet. Recommendation to change the fixture for the flush valve to be on the access side.

11

The existing paper towel dispenseris installed above the accessible reach range. Per the standards, since the hand dryer is within the accessible reach, this is acceptable.

14

The existing door clearances are compliant per the standards.

15

Existing hand dryers are installed at 51” from the finish floor to the operative device. This exceeds the maximum accessible reach ranges per the requirements. Recommendation is either lower one of the two hand dryers to be within the reach range, or install a new hand dryer with operative parts at a maximum 48” above the finish floor.

16

Existing paper towel dispenser is installed at 52” from the finish floor to paper towels. This exceeds the maximum accessible reach ranges per the requirements. Recommendation is either lower the paper towel dispenser or providing another dispenser within the reach range of maximum 48” above finish floor.

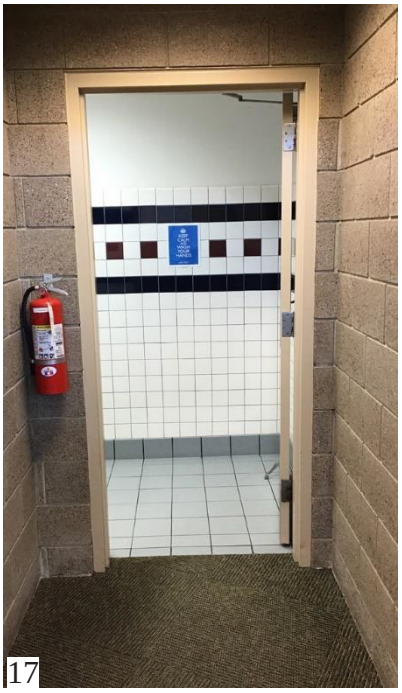

17

Existing entry door to the restroom provides 10” on the push side for clearance. The requirements require a minimum 12” if a closer is provided. Recommendation is to remove the closure to be accessible compliant.

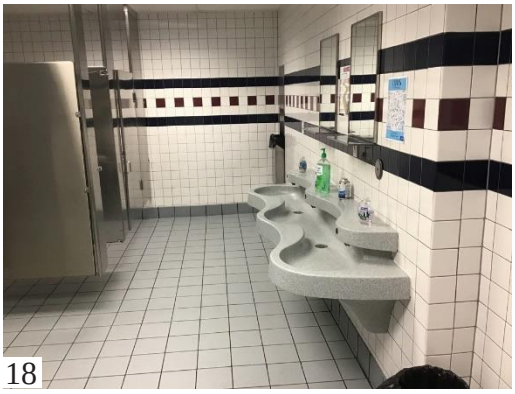

18

Existing mirrors installation are not compliant with the requirements. Mirrors located above lavatories or countertops shall be installed with the bottom edge of the reflecting surface 40” maximum above the finish floor or ground. Recommendation of lowering all mirrors to comply with accessible codes.

19

Existing toilet is located 14.5” from the centerline of toilet to the side wall. This is below the minimum requirements of the standards (16”- 18). All grab bars meet the requirements.

20

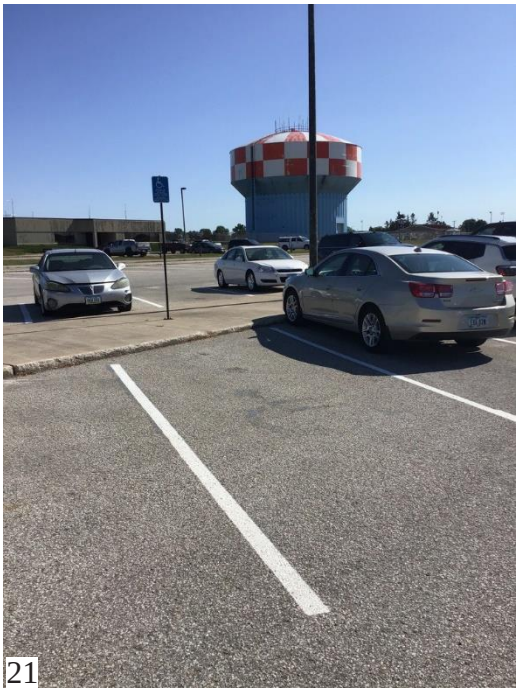
21

22

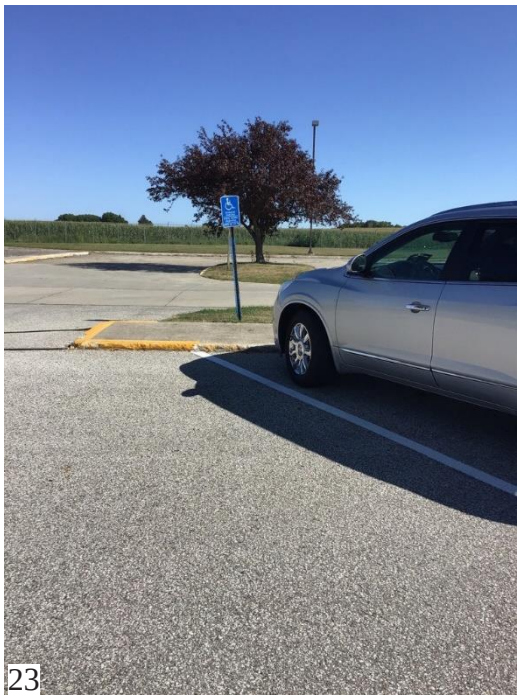
23

Existing accessible parking stalls do not meet accessible requirement. All accessible stalls must be paired with an access aisle. Recommendation to re-stripe and reconfigure the two accessible stalls to provide the following. Van-accessible stall meeting one of the two options: at least 11 feet wide with an access aisle at least 5 feet, or at least 8 feet wide an accessible aisle at least 8 feet.
Second accessible stall shall be at least 8 feet wide and may share the provided access aisle with the van-accessible stall. The access aisle shall adjoin an accessible route connecting parking spaces to accessible entrances.

F. Blanden Memorial Art Museum

920 3rd Ave S, Fort Dodge, IA 50501

Constructed 1931; Additions 1960

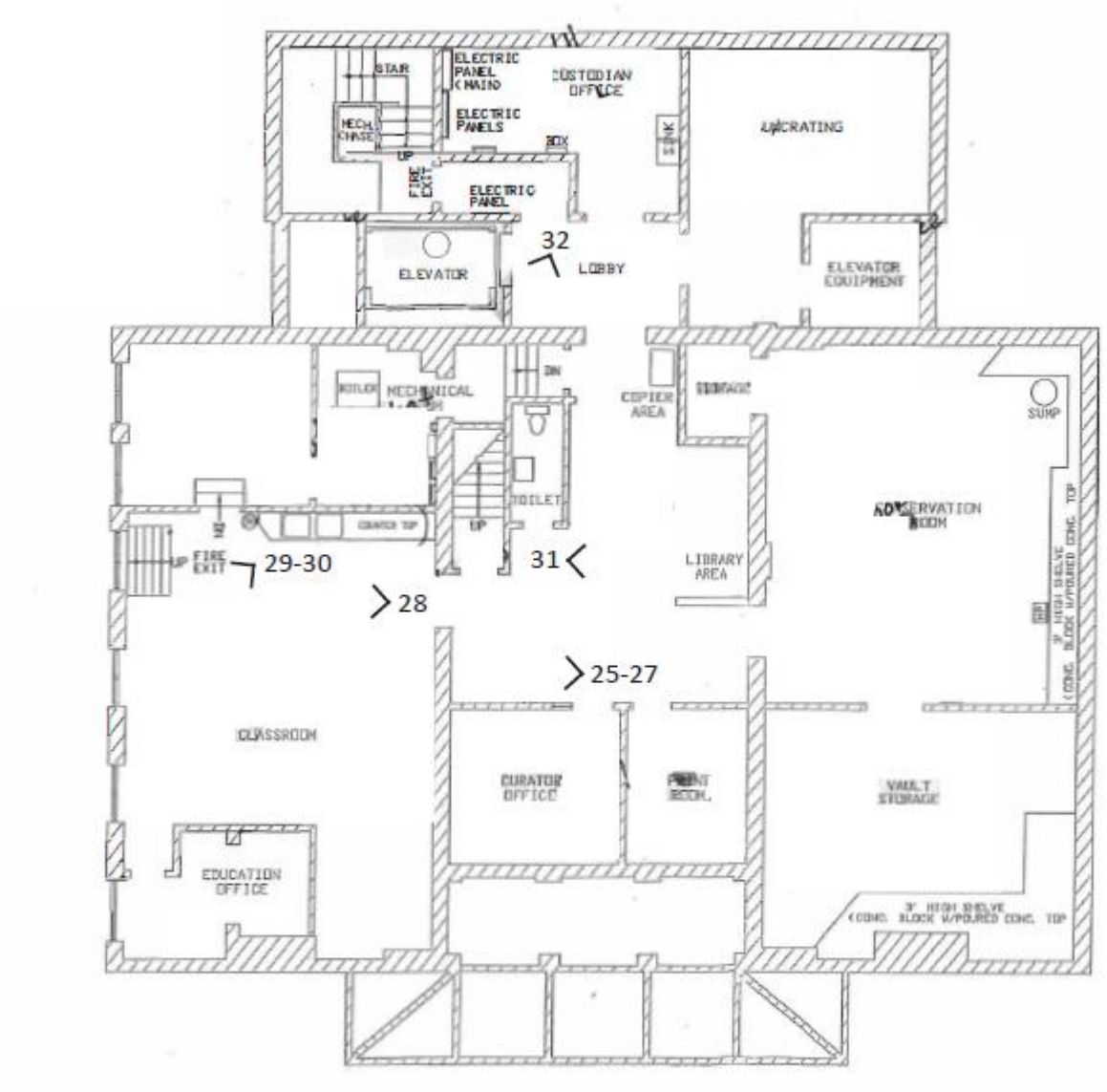

Basement Level

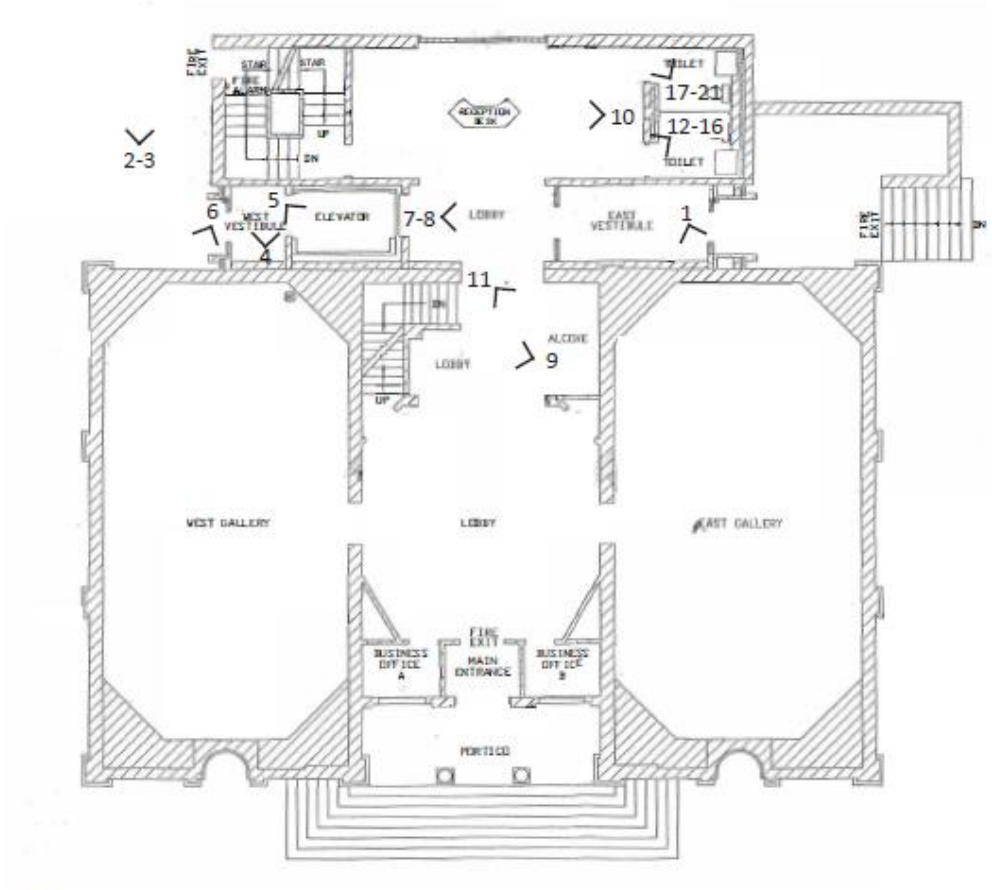

First Level

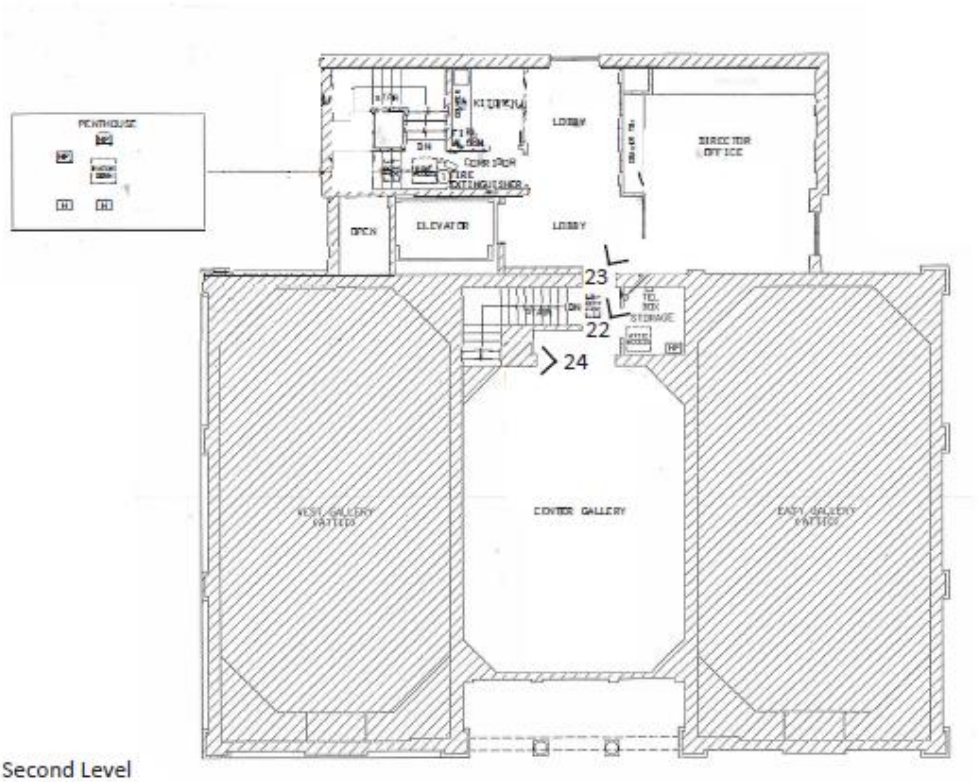

Second Level

1

Main entry door is unfeasible to be the accessible entry. Proper signage is provided to direct the public to the accessible entrance.

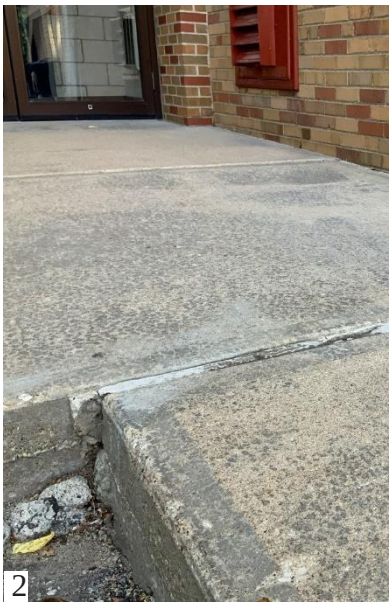

2

Existing sidewalk for the accessible path is not compliant. Sidewalk varies up to 1” creating a tripping hazard.

3

Existing accessible parking stalls do not meet accessible requirement. Accessible stalls must be paired with an access aisle. Recommendation to re-stripe and reconfigure the two accessible stalls to provide the following. Van-accessible stall meeting one of the two options: at least 11 feet wide with an access aisle at least 5 feet, or at least 8 feet wide an accessible aisle at least 8 feet. Second accessible stall shall be at least 8 feet wide and share the provided access aisle with the van accessible stall. The access aisle shall adjoin an accessible route connecting parking spaces to accessible entrances.

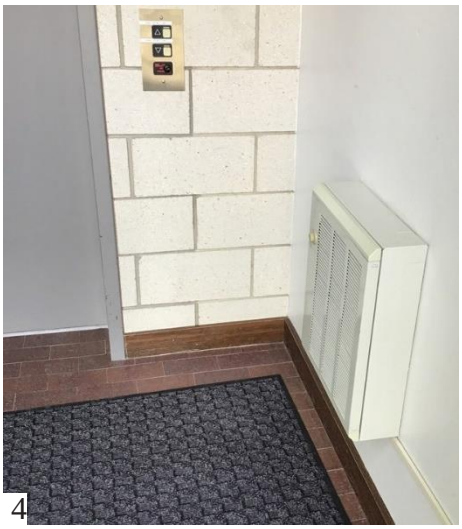

4

Existing vestibule heater is installed at a location not compliant with protruding objects standards. Standards allow for a maximum 4” protrusion when installed between 27”-80” from the finish floor. Recommendation to install cane protection from bottom of heater to floor

5

to meet the standards. Existing fire alarm pull is installedabove the reach range within the standards. Pull is installed 55.5” above finished floor. Recommendation to lower pull to maximum 48” above finish floor.

6

Existing call button for accessible access is installed per the standards reach ranges.

7

8

Existing elevator is compliant with the standards.

9

Existing thermostat is installed above the reach ranges within the standards. All operative parts of shall be installed a maximum 48” above finish floor. Recommendation to lower thermostat to comply with standard.

10

Existing water fountain is installed per the standards per the height, but requires cane detection to be compliant.

11

Handrails are installed per the standards.

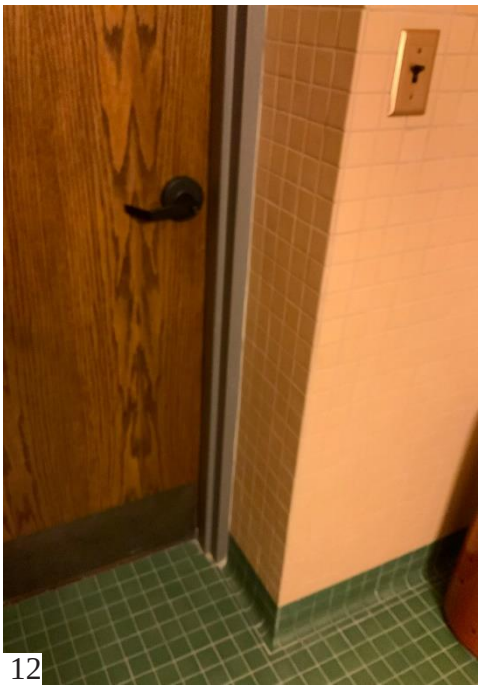

12

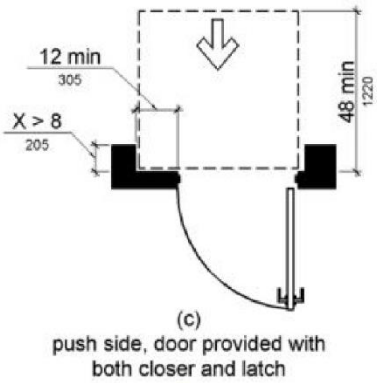

13

14

Existing door clearances do not comply with the standards. Door is recessed 14” into the open. Per standards in a recessed door, the push side clearance must be provided, per the diagram on the right. Clearance is only required on doors with a closer. Recommendation to remove the existing closer to be compliant with the standards.

Pipe wrap is installed per the standards

Existing sink counter exceeds the standards. Sink counter to be a maximum 34” from finish floor, existing is 34 1/4”. As the counter exceeds the standards by 1/4”, counter is within the allowable tolerances.

Existing soap and paper towel dispenser exceeds the standards. Recommendation to lower for operative parts to be a maximum 48” above finish floor.

15

16

Baby changer is not installed per the standards.When at an open position, the surface must bemaximum 34” above finish floor. As existing toilet grab bars prevent station to be installed at this height. Recommendation is to eitherremove the changer or relocate it to a differentwall. Toilet paper dispenser is not compliant with the standards. Toilet paper dispenser shall be 7-9” in front of the toilet. Measurement shall be measuredthe centerline of the dispenser.

Existing flush valve is on the wrong side. Recommendation changing the fixturefor the flush valve to be on the access side.

17

Sufficient door clearance is not provided at the door. Min 48” is required. Existing display encroaches on the door clearances. Recommendation to relocate display unit outside of the clearance zone.

Existing door signage to be installed with the lowest character min 48” and max 60” above finish floor.

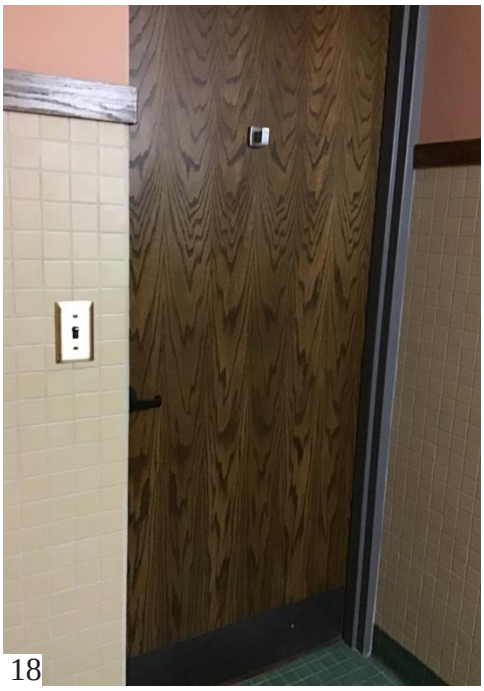

18

Existing light switch and coat hook is installed above the standards maximum reach range. Recommendation to lower the coat hook to a maximum 48” above finish floor. The light switch should be relocated top of controls maximum 48” above the finish floor.

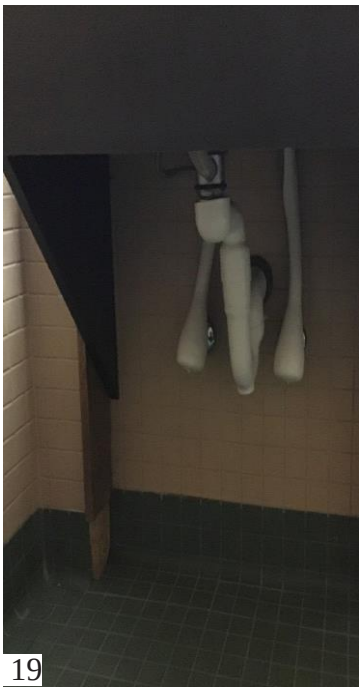

19

Pipe wrap is installed per the standards.

20

Hook at bench installed above the accessible reach range. Recommendation to reinstall at a maximum of 48” above finish floor.

21

Toilet paper dispenser is not compliant with the standards. Toilet paper dispenser shall be 7-9” in front of the toilet. Measurement shall be measured the centerline of the dispenser.

22 Existing handrail is not compliant with the standards. Handrail projects 4.5” from the wall. Recommendation to return the handrail to the ground to comply with the standards

23 Existing handrail return is not compliant with the standards. A min 1.5” clearance is required from the handrail and the wall. It is our recommendation tomodify the handrail to provide min 1 1/2” clearance.

24 Existing thermostat is installed above the reach ranges required by standards. All operative parts of shall be installed a maximum 48” above finish floor. Recommendation to lower thermostat to be within the standard.

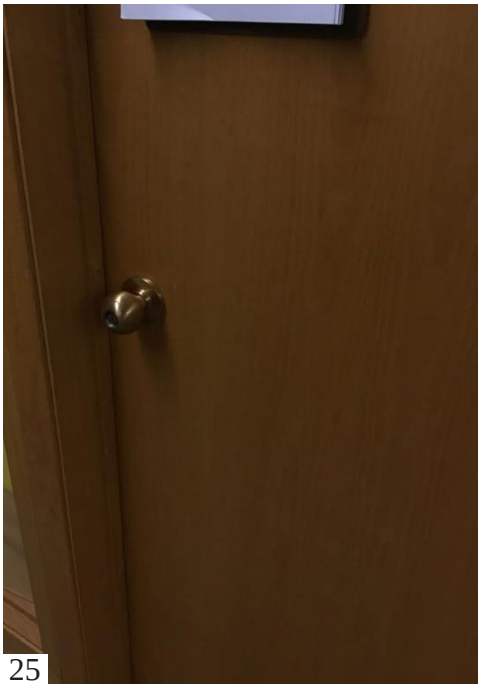

25

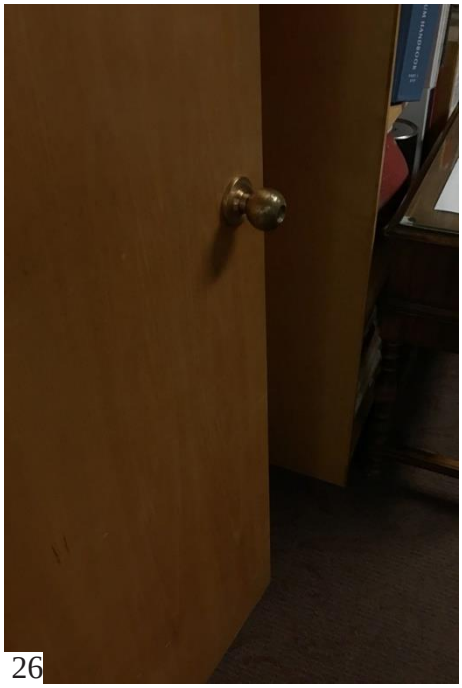

26

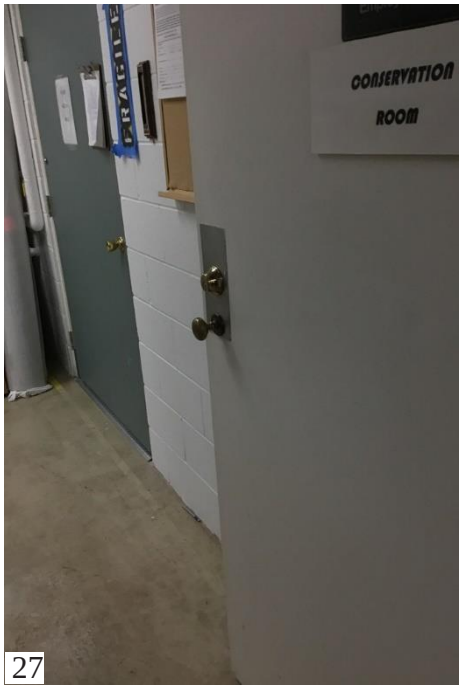

27

Various door hardware within the basement is not compliant with the standards. Door handles must be in compliant with operable parts section 309 of the standards. Operable parts shall be operable with one hand and shall not require tight grasping, pinching, or twisting of the wrist. The force required to activate operable parts shall be 5 pounds (22.2 N) maximum. Recommendation to replace all round door handles with levers to meet the standards.

28

Double door does not comply standards. At least one of the active leaves of doorways with two leaves shall comply with a min 32” door clearance. Existing leaves provide a 22” clear opening. Recommendation to replace the doors.

29

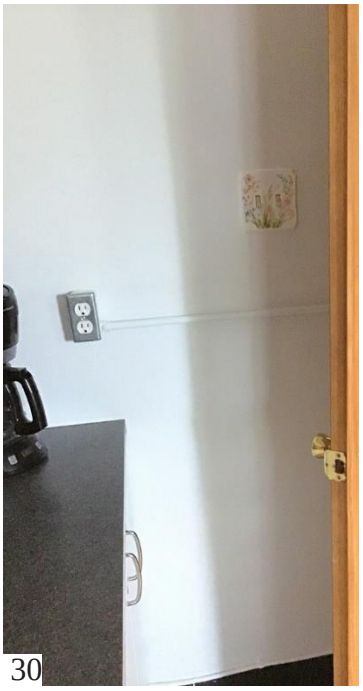

30

Existing fire extinguisher, paper towel dispenser, and thermostats are installed above the reach ranges per the standards. Handle of extinguisher to be installed a maximum of 48” above finished floor. Existing base cabinets are installed above the standards. Recommendation is to replace with a 34” tall base cabinet.

31

Existing cups for water dispenser are installed above the reach ranges within the standards. Cups should be accessible at 48” above finish floor. Recommendation is to either lower the cup dispenser or provide alternative location for cups within the accessible reach range.

32

Existing fire extinguisher is installed above the reach ranges within the standards. Recommendation is to lower extinguisher for the handle to be a maximum 48” above finish floor.

G. **Citizens Central – Senior Center**

617 Central Ave, Fort Dodge, IA 50501
Constructed - Unknown

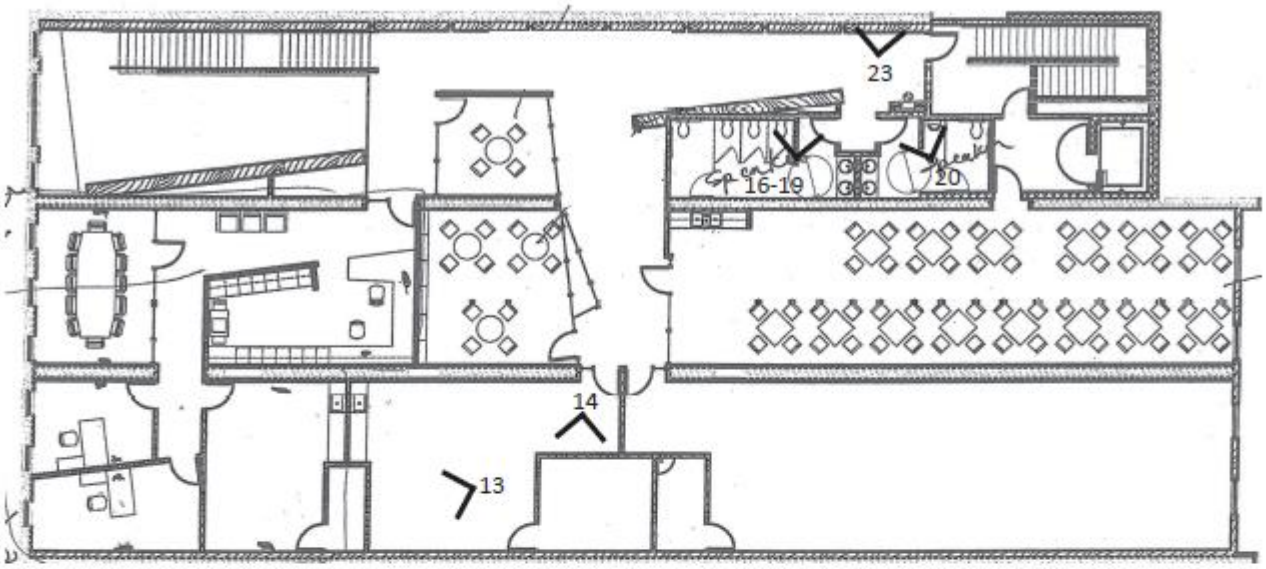

Second Level
**Existing conditions do not align with floor plan

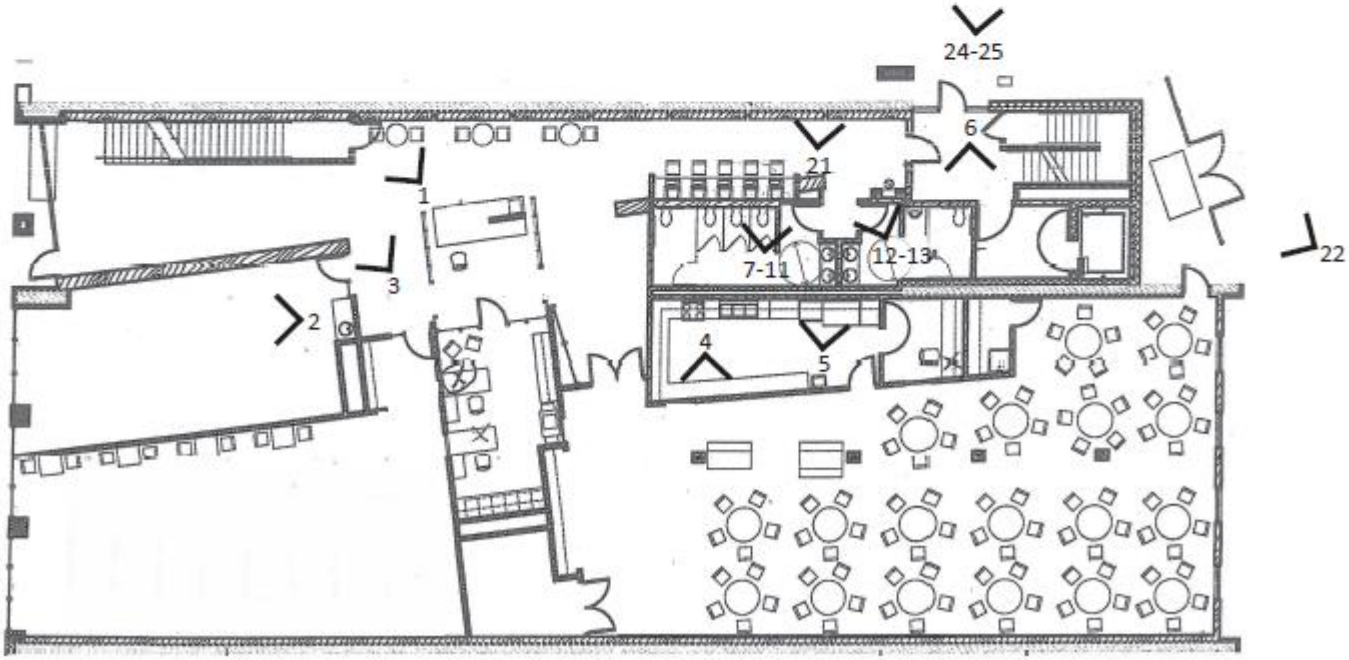

First Level

1

Existing accessible counter meets the requirements of the standards

2

Existing hand sink is not compliant with the standards. The sink it only 19” from the wall. A min 24” is required for a side approach. Recommendation to modify existing cabinets /sink as required to allow for a front approach.

3

Existing signage for the community room does not contain braille. Recommendation to add braille to public rooms signage.

4

Existing stove is not compliant with the standards. Controls shall be located in the front panel to meet the standards. Recommendation is to replace the stove with a compliant accessible oven.

5

Existing paper towel dispenser is installed above the reach ranges within the standards. Recommendation is to lower paper towel dispenser to maximum 48” above finish floor.

6

Existing fire alarm pull is installed above the reach ranges within the standards. It is our recommendation to lower the fire pull to maximum 48” above finish floor.

7

Flush controls are located on the wrong side of the fixture per the standards. Flush controls shall be located on the open side of the water closet Recommendation is to flip fixture from men's and women's restrooms.

Rear grab bar is not installed per the standards. A minimum 12'' overlap from centerline of toilet to grab bar is required. Existing provides 6". Recommendation is to relocate existing grab bar.

8

Existing sink pipe is not properly protected per the standards. Recommendation is to install pipe wrap to meet the standards.

9

Existing feminine hygiene dispenser is installed above the reach ranges per the standards. Controls are located 48-1/4" above finish floor. As existing, this condition exceeds the standards by 1/4".

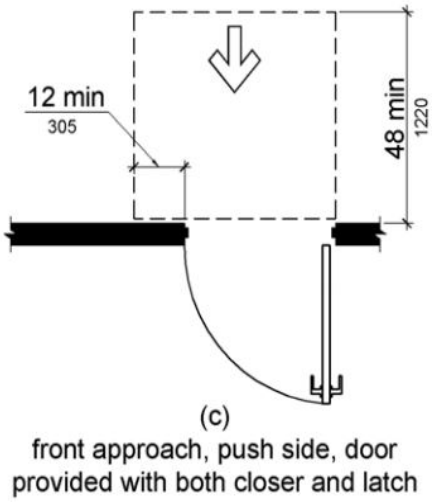

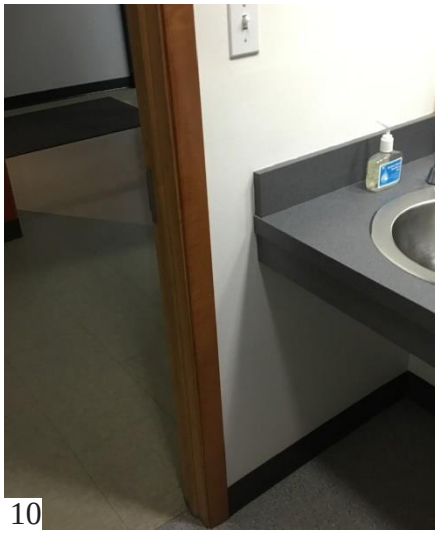

10

11

Existing women's restroom entry door is compliant with the standards, as long as a latch is never added to the door. Per the diagram on the left, if both a latch and closer is provided, a minimum 12" clearance is required on the push side. Existing conditions provides 7 1/2"

12

Flush controls are located on the wrong side of the fixture per the standards. Flush controls shall be located on the open side of the water closet Recommendation is to flip fixture from men and women's restrooms.

Rear grab bar is not installed per the standards. A minimum 12'' overlap from centerline of toilet to grab bar is required. Existing provides 6". Recommendation is to relocate existing grab bar.

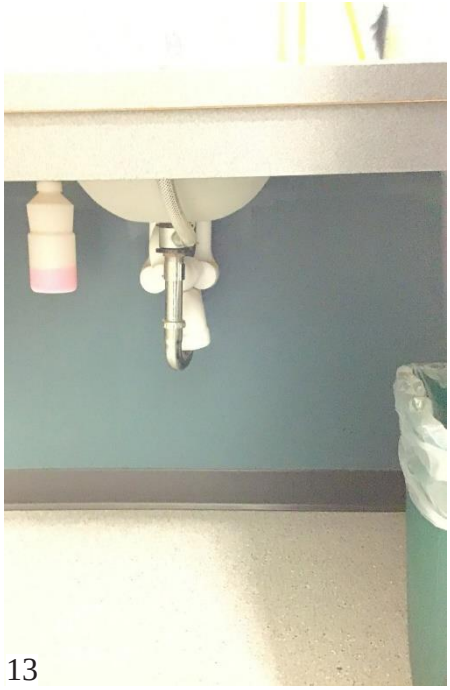

13

Existing sink pipe is not properly protected per the standards. Recommendation is to install pipe wrap to meet the standards.

14

Existing doors clear floor is not compliant with the standards. Existing door does not provide min 18" on the pull side. Recommendation is to modify the door either by relocation or swinging out to comply with the standards.

15

Existing sink is not compliant with the standards. From centerline of the sink to the wall is less than 2'-0" per the standards. Sink/base cabinet should be modified for a front approach or sink to be relocated to comply with the standards.

16

Existing vanity, mirrors, and paper towel dispenser are compliant with the standards.

17

Existing feminine hygiene dispenser is installed above the reach ranges per the standards. Recommend lowering controls to maximum 48" above finish floor to be complaint.

18

Flush controls are located on the wrong side of the fixture per the standards. Flush controls shall be located on the open side of the water closet. Recommendation is to flip fixture from men's and women's restrooms.

Rear grab bar is not installed per the standards. Per ADA standards, a min 12'' overlap from centerline of toilet to grab bar is required. Existing provides 6". Recommendation is to relocate existinggrab bar.

19

Existing coat hook in accessible stall is installed above the reach ranges within the standards. Recommendation is to lower the existing hook to a maximum of 48" above finish floor to be compliant.

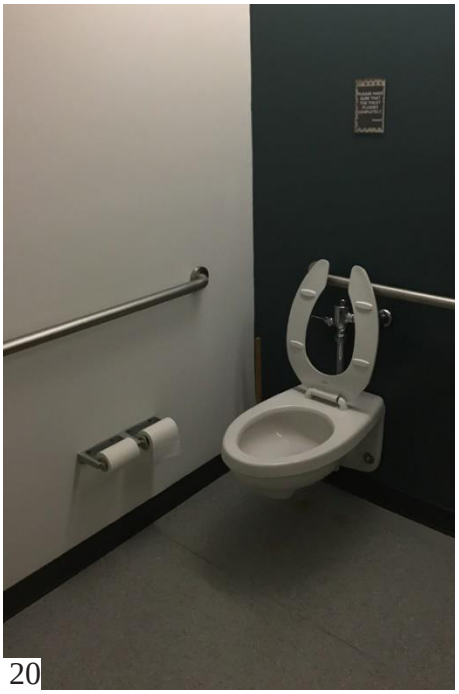

20

Flush controls are located on the wrong side of the fixture per the standards. Flush controls shall be located on the open side of the water closet Recommendation is to flip fixture from men's and women's restrooms.

Rear grab bar is not installed per the standards. Per the diagram on the right, a min 12'' overlap from centerline of toilet to grab bar is required. Existing provides 6". Recommendation is to relocate existing grab bar.

21

Water fountains are considered a protruding object exceeding the maximum 4” allowance per the standards. Recommendation to add cane detection on the exposed side of the water fountain to be complaint. Location of cane detection to not limit the min 30” clear floor requirements, measured from center line of the water fountain.

22

Existing accessible parking stalls do not meet accessible requirement. All accessible stalls must be paired with an access aisle. Recommendation to re-stripe and reconfigure the two accessible stallsto provide the following. Van-accessible stall meeting one of the two options: at least 11 feet wide with an access aisle at least 5 feet, or at least 8 feet wide an accessible aisle at least 8 feet.

Second accessible stall shall be at least 8 feet wide and may share the provided access aisle with the van-accessible stall. The access aisle shall adjoin an accessible route connecting parking spaces to accessible entrances.

23

Water fountains protruding objects and shall not exceeding the maximum 4” allowance per the standards. Recommendation is to add cane detection on the exposed side of the water fountain to be complaint. Cane detection cannot encroach on the min 30” clear floor requirements, measured from center line of the water fountain.

24

25

Existing accessible entry door, sidewalks, and operative access are complaint per the standards.

H. Fort Dodge Public Library

424 Central Ave, Fort Dodge, IA 50501
Constructed - Unknown

1-2

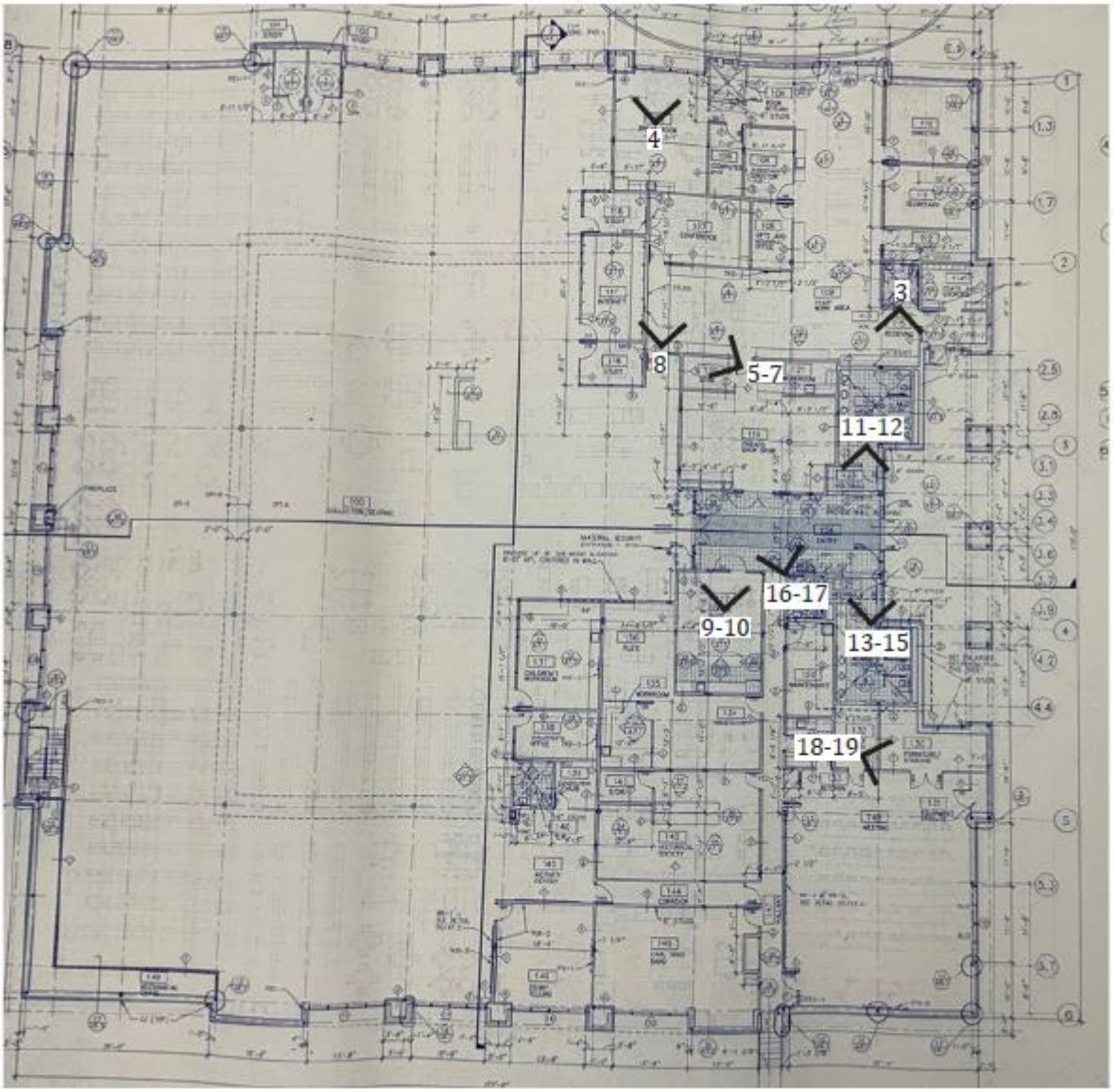

First Level

1

2

Existing accessible parking stalls do not meet accessible requirement. All accessible stalls must be paired with an access aisle. Recommendation to re-stripe and reconfigure the two accessible stalls to provide van-accessible stalls meeting one of the two options: at least 11 feet wide with an access aisle at least 5 feet, or at least 8 feet wide an accessible aisle at least 8 feet.
Second accessible stall shall be at least 8 feet wide and may share the provided access aisle with the van-accessible stall. The access aisle shall adjoin an accessible route connecting parking spaces to accessible entrances.

3

Existing toilet does not comply with the standards. Centerline of the toilet to the wall is 18.5”. The standards require 16” - 18”.

4

Existing employee sink does not comply with the standards. Countertop is 36” above finish floor, while the standards require 34” at the sink. Recommendation is to modify the casework only at the sink to comply with the standards.

5

Existing sink does not comply with the standards. Countertop is 36” above finish floor, while the standards require 34” at the sink. Recommendation is to modify the casework only at the sink to comply with the standards.

6

Existing service counter is not compliant with the standards. A portion of the counter surface that is 30 inches long minimum and 36 inches high maximum shall be provided.

7

Existing fire extinguisher is installed above the reach range. Recommendation is to lower to a maximum 48” above finish floor.

8

Existing emergency defibrillator is installed at location not compliant with protruding objects standards. The code allows for a maximum 4” protrusion when installed between 27”-80” from the finish floor. Recommendation is to install cane protection under cabinet.

9

Existing sink does not comply with the standards. Countertop is 36” above finish floor, while the standards require 34” at the sink. Recommendation is to modify the casework only at the sink to comply with the standards.

10

Existing fire extinguisher is installed above the reach range. Recommendation is to lower to a maximum 48” above finish floor.

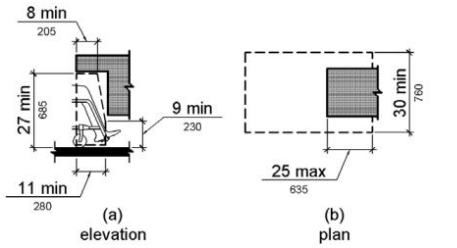

11

Existing shroud does not fully provide pipe protection. Recommendation is either to extend the shroud or install protection on the exposed pipe. Any modifications shall not impede on the required clearances above.

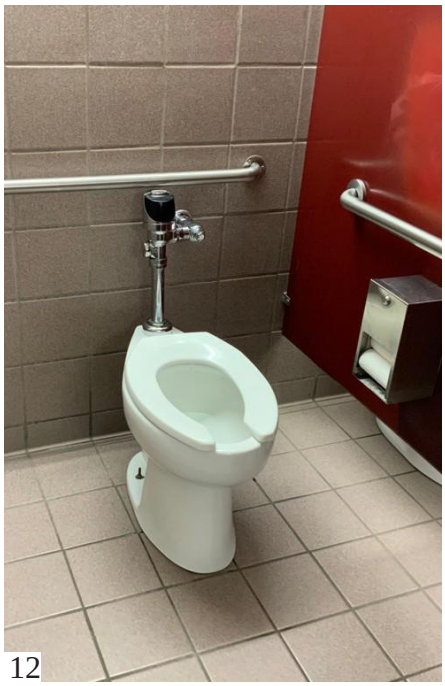

12

Existing toilet in men's restroom does not comply with the standards. Centerline of the toilet to the wall is 19". The standards require 16" - 18".

13

Existing baby changer is not installed per the standards. Height of the station shall be a of maximum 34" above finish floor when in an open position. When lowering the height confirm baby changer at an open position allows for a minimum 27" knee clearance.

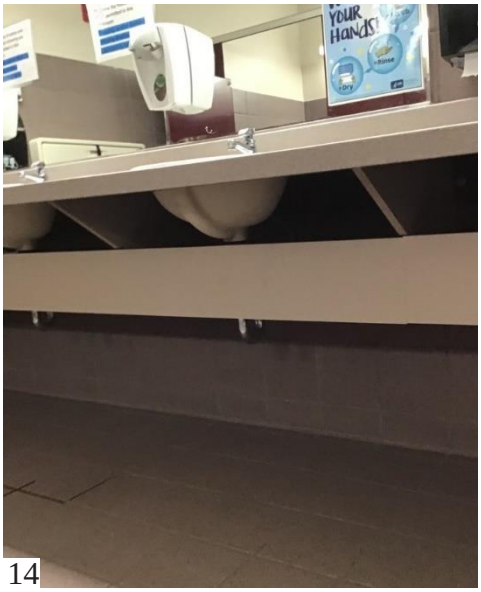

14

Existing shroud does not fully provide pipe protection. Recommendation is either to extend the shroud or install protection on the exposed pipe. Any modifications shall not impede on the required clearances above. Additionally, soap dispenser is location above the reach ranges of the standards. Soap dispenser to be a maximum 48" from finish floor.

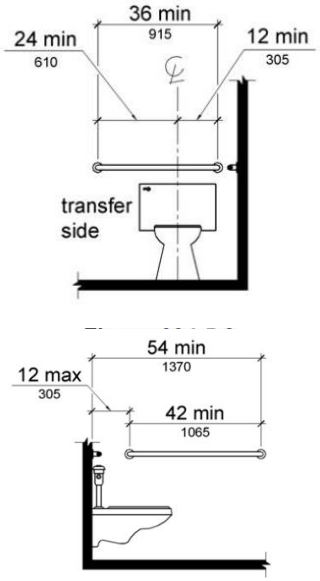

15

Existing toilet in women's restroom does not comply with the standards. Centerline of the toilet to the wall is 15.5". The standards require 16" - 18".

Additionally side and back grab bar are not located per the standards. Back grab bar does not overlap min 12" from the centerline of the toilet. Side grab bar is located 12.5" from the back wall.

16

In unisex restroom toilet paper dispenser is too close to the toilet. Per the standards, toilet dispenser to be between 7-9” from toilet. Existing toilet does not comply with the standards. Centerline of the toilet to the wall is 20.5”. The standards require 16” - 18”.

17

Existing baby changer is not installed per the standards. Recommendation is to lower the height of the station to maximum 34” above finish floor when in an open position. When lowering the height confirm baby changer at an open position allows for a minimum 27” knee clearance.

18

Existing base cabinet impedes are the minimum clear floor space for door within the standards. On the pull side of the door, a min 18” clear is required. Recommendation is either to relocate door to provide the minimum clearances or alter the direction of the door swing to swing into the hallway. If door swing was altered, only 12” clearance is required on the push side of the door.

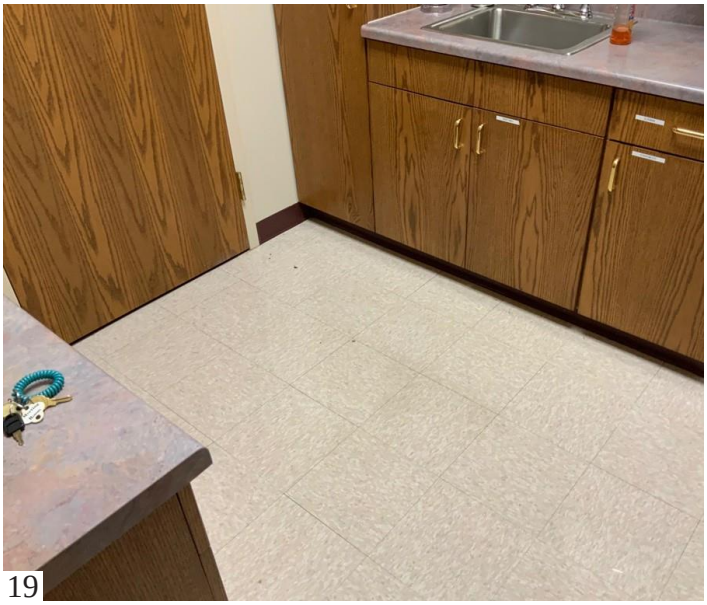

19

Existing sink does not comply with the standards. Countertop is 36” above finish floor, while the standards require 34” at the sink. Recommendation is to modify the casework only at the sink to comply with the standards.

I. Fire Department

1515 Central Ave, Fort Dodge, IA 50501
Constructed - Unknown

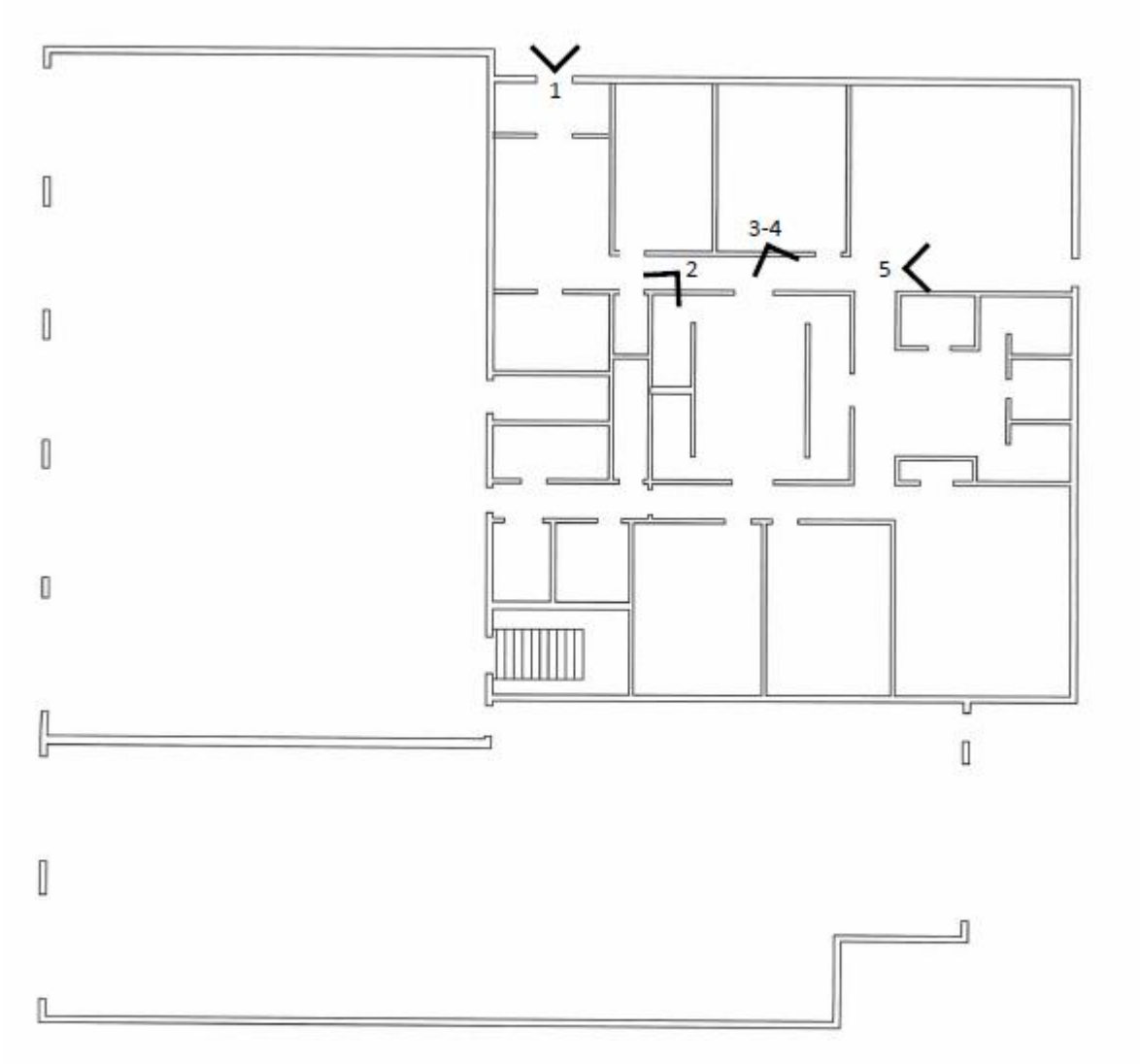

First Level
**Existing conditions do not align with floor plan

1

Existing vestibule is not compliant with the standards. The distance between two hinged or pivoted doors in series and gates in series shall be 48“ minimum plus the width of door swinging into the space.

2

Existing sign is installed above the standards height restrictions and without braille. Characters on signs shall be located 48” min above the finish floor or ground surface, measured from the baseline of the lowest tactile character and 60“ max above the finish floor or ground surface, measured from the baseline of the highest tactile character.

3

Existing toilet is installed 18.5” from side wall exceeding the standards of 16-18” measured from the centerline of the toilet.

4

Mirrors above the sinks are not in compliant with the standards. Mirrors above the sink are installed 48” to the reflective surface. Mirrors above lavatories or countertops shall be installed with the bottom edge of the reflecting surface 40” maximum above the finish floor or ground.

5

Existing door in the fitness room does not provide the min 18” clearance of the pull side of the door.

City of Fort Dodge ADA Self-Evaluation & Transition Plan for Park Facilities

J. City Of Fort Dodge Public Park Building Facilities

Fort Dodge Aquatic Center

1111 N 32nd St, Fort Dodge, IA 50501
Constructed -

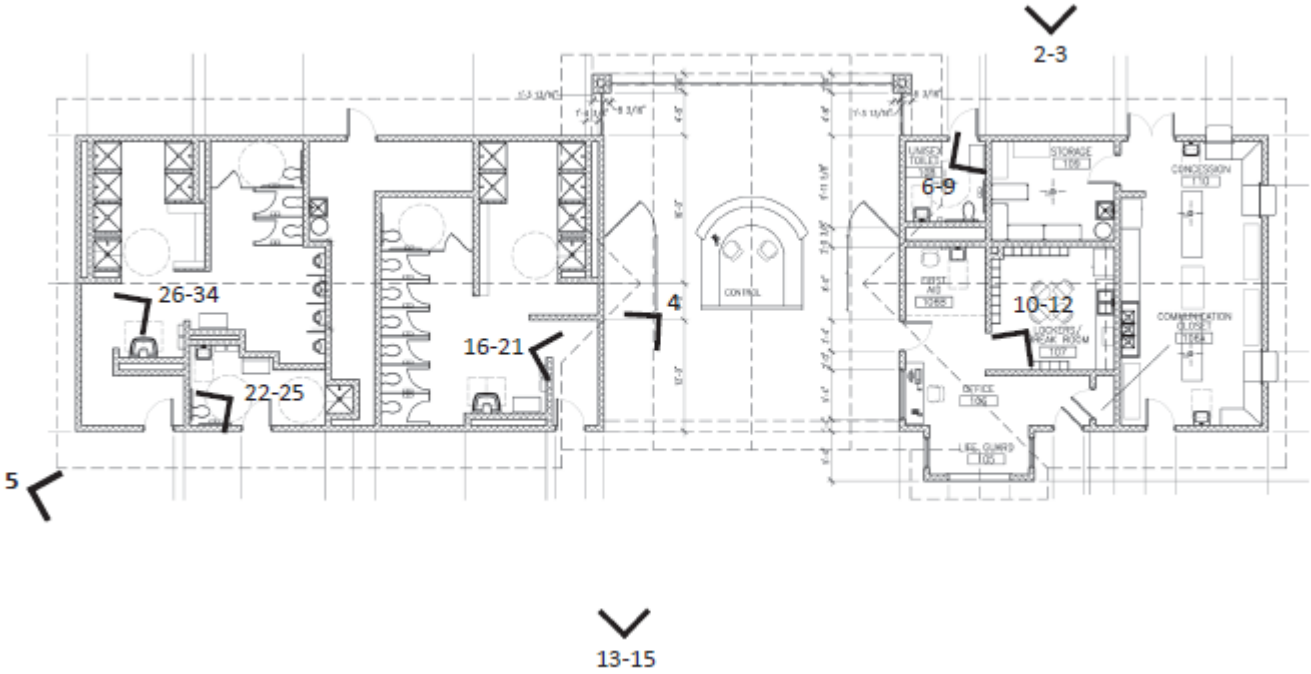

1

Existing accessible parking stalls do not meet accessible requirement. All accessible stalls must be paired with an access aisle. Recommendation to re-stripe and reconfigure the two accessible stalls to provide the following: van-accessible stall meeting one of the two options, at least 11 feet wide with an access aisle at least 5 feet, or at least 8 feet wide an accessible aisle at least 8 feet. The second accessible parking shall be at least 8 feet wide and share the provided access aisle with the van-accessible stall.

2

Existing service counter is compliant with the standards.

3

Water fountains are considered a protruding object exceeding the maximum 4” allowance per the standards. It is our recommendation to add cane detection on the exposed side of the water fountain to be complaint. Location of cane detection to not limit the min 30” clear floor requirements, measured from center line of the water fountain.

4

Facility provides an accessible compliant service counter.

5

Existing lockers are complaint with the standards.

6

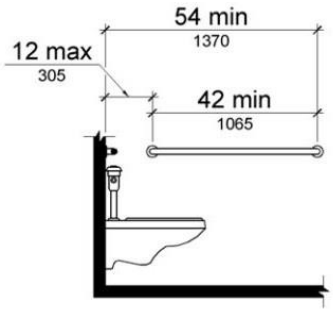

Figure 604.5.1
Side Wall Grab Bar at Water Closets

Side grab bar is not installed per the standards. Per the diagram on the right, existing grab bar is installed 13” from the back wall. Recommendation is to relocate existing grab bar.

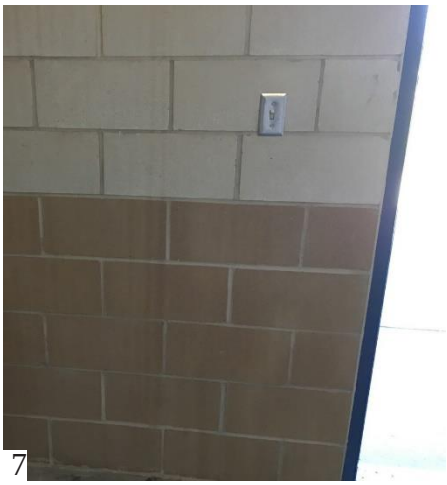

7

Existing light switch installation exceeds the reach ranges within the standards. Recommendation it to lower light switch to a maximum 48” above finish floor to be compliant with the standards.

8

Existing baby changer is not installed per the standards. Recommendation is to lower the height of the station to maximum 34” above finish floor when in an open position. When lowering the height confirm baby changer at an open position allows for a minimum 27” knee clearance.

9

Existing sink does not provide pipe wrap. Recommendation is to add pipe wrap. Existing mirror reflective surface is installed 1/2” above the standards. Mirrors located above lavatories or countertops shall be installed with the bottom edge of the reflecting surface 40” maximum above the finish floor or ground. Recommendation is to lower existing mirror to align with the standards

10

Existing sink does not comply with the standards. Countertop is 36” above finish floor, while the standards require 34” at the sink. Recommendation is to modify the casework only at the sink to comply with the standards.

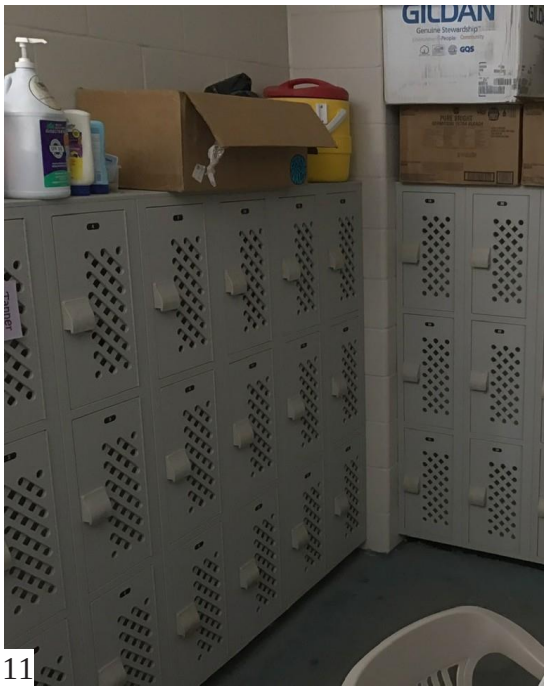

11 Existing lockers are compliant with the standards. Recommendation is to label 2% of existing lockers as accessible lockers.

12 Wall mount unit is not compliant with protruding objects standards. The code allows for a maximum 4” protrusion when installed between 27”-80” from the finish floor. Recommendation is to install cane protection between the door and the box.

13 Existing zero depth pool entry is compliant.

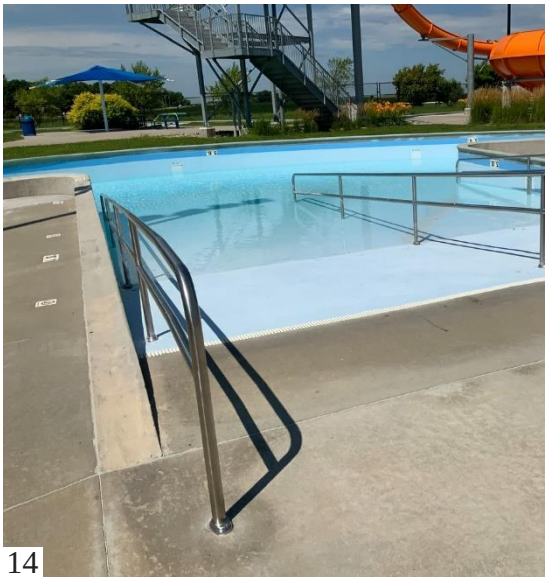

14 Existing ramp is slightly above the standards of maximum slope 1” to 12’. Existing slope is 1”to 10”.

15 Existing pool lift installed.

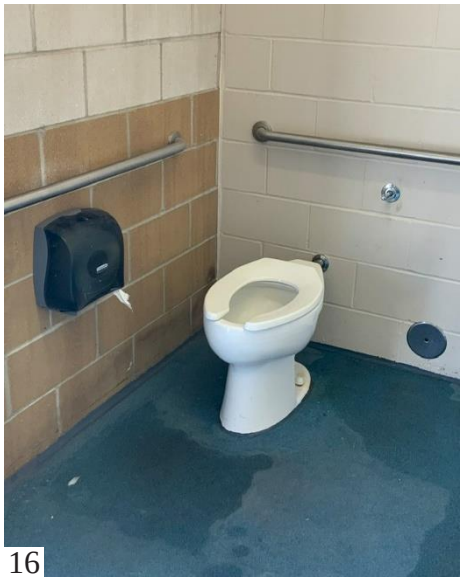

16 Existing toilet is installed 18.5” from side wall exceeding the standards of 16-18” measured from the centerline of the toilet. Additionally, grab bars are not installed per the standards. Refer to the diagrams below for the requirements.

17

Mirrors above the sinks are not in compliant with the standards. Mirrors above the sink are installed 48” to the reflective surface. Mirrors located above lavatories or countertops shall be installed with the bottom edge of the reflecting surface 40” maximum above the finish floor or ground.

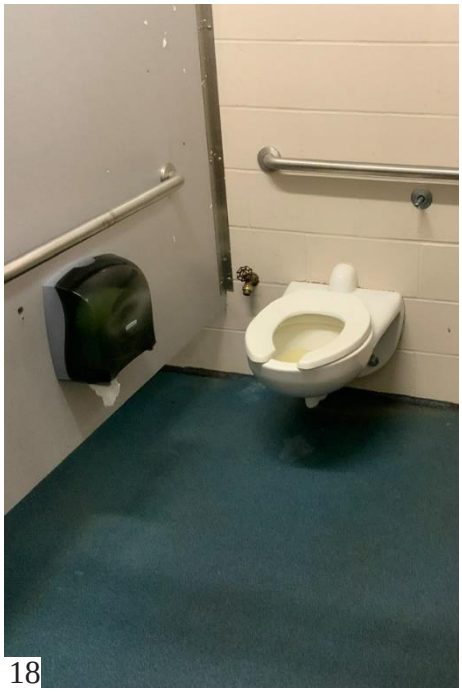

18

Existing toilet is installed 19” from side wall exceeding the standards of 16-18” measured from the centerline of the toilet. Additionally, hook is installed above the reach range. Recommendation is to lower the hook to a maximum 48” above finish floor.

19

Existing baby changer is not installed per the standards. Recommendation is to lower the height of the station to maximum 34” above finish floor when in an open position. When lowering the height confirm baby changer at an open position allows for a minimum 27” knee clearance.

20

Soap dispenser is installed above the reach ranges within the standards. Recommendation is to lower dispenser to a maximum 48” above finish floor.

21

Coat hook adjacent to the shower is installed above the reach ranges of the standards. Recommendation is to lower hook to a maximum 48” above finish floor.

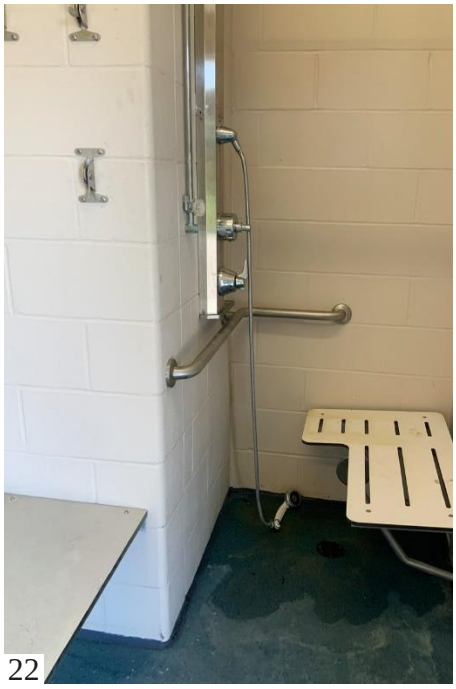

22

Coat hook adjacent to the shower is installed above the reach ranges of the standards. Recommendation is to lower hook to a maximum 48” above finish floor.

23

Existing baby changer is not installed per the standards. Recommendationis to lower the height of the station to maximum 34” above finish floor when in an open position. When lowering the height confirm baby changer at an open position allows for a minimum 27” knee clearance.

24

Existing mirror reflective surface is installed 1” above the standards. Mirrors located above lavatories or countertops shall be installed with the bottom edge of the reflecting surface 40” maximum above the finish floor or ground. Recommendation is to lower existing mirror to align with the standards.

25

Side grab bar is not compliant with the standards. At a minimum, grab bars shall be 42” long.

26

Mirrors above the sinks are not in compliant with the standards. Mirrors above the sink are installed 48” to the reflective surface. Mirrors above lavatories or countertops shall be installed with the bottom edge of the reflecting surface 40” maximum above the finish flooror ground.

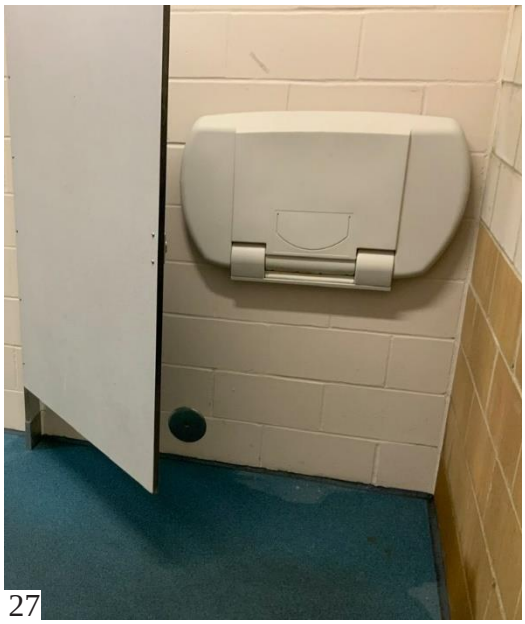

27

Existing baby changer is not installed per the standards. Recommendation is to lower the height of the station to maximum 34” above finish floor when in an open position. When lowering the height confirm baby changer at an open position allows for a minimum 27” knee clearance.

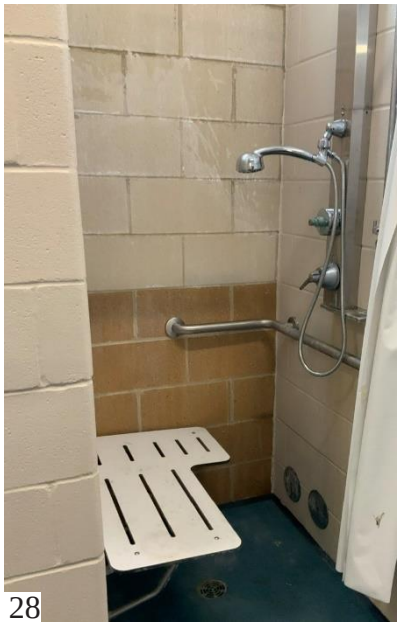

28

Coat hook adjacent to the shower is installed above the reach ranges of the standards. Recommendation is to lower hook to a maximum 48” above finish floor.

29

Mirrors above the sinks are not in compliant with the standards. Mirrors above the sink are installed 48” to the reflective surface. Mirrors located above lavatories or countertops shall be installed with the bottom edge of the reflecting surface 40” maximum above the finish floor or ground.

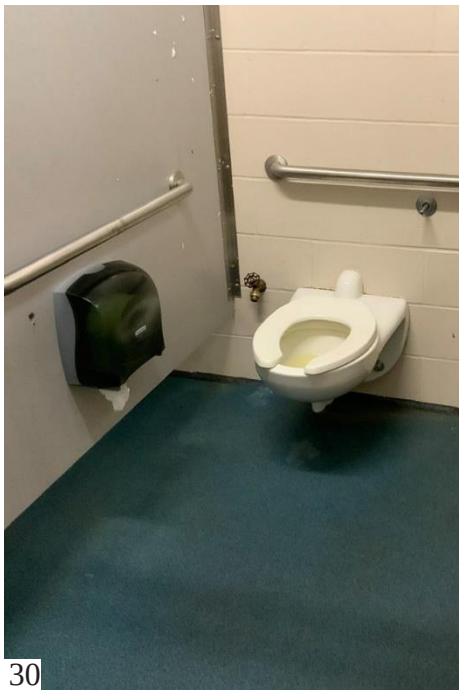

30

Existing toilet is installed 19” from side wall exceeding the standards of 16-18” measured from the centerline of the toilet. Additionally, hook is installed above the reach range. Recommendation is to lower the hook to a maximum 48”above finish floor.

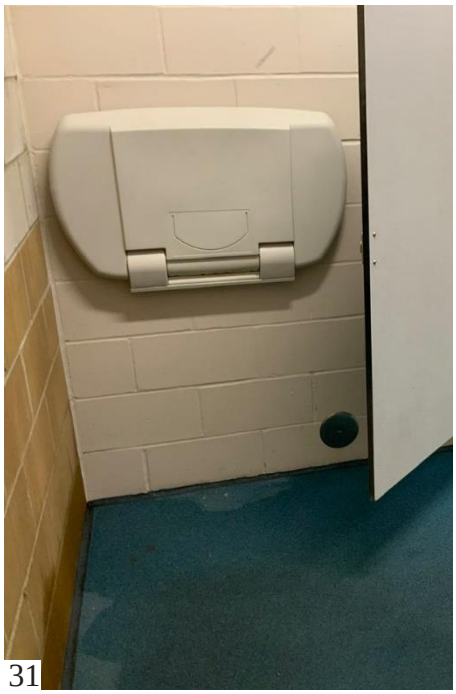

31

Existing baby changer is not installed per the standards. Recommendation is to lower the height of the station to maximum 34” above finish floor when in an open position. When lowering the height confirm baby changer at an open position allows for a minimum 27” knee clearance.

32

Soap dispenser is installed above the reach ranges within the standards. Recommendation is to lower dispenser to a maximum 48” above finish floor.

33

Coat hook adjacent to the shower is installed above the reach ranges of the standards. Recommendation is to lower hook to a maximum 48” above finish floor.

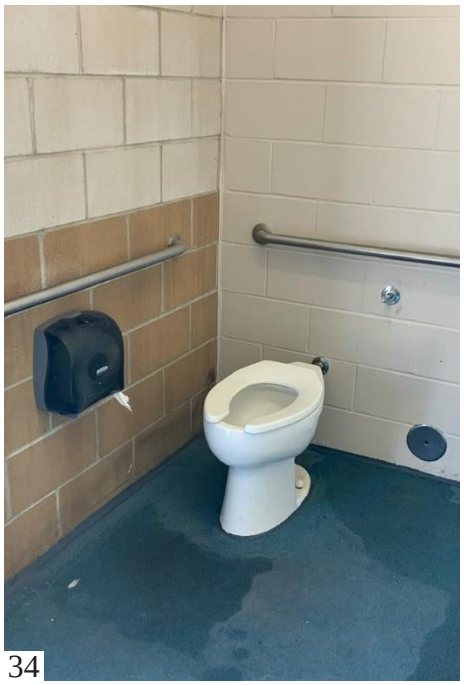

34

Existing toilet is installed 18.5” from side wall, exceeding the standards of 16-18” measured from the centerline of the toilet. Grab bars are not installed per the standards.

SNELL-CRAWFORD PARK

1404 Park St, Fort Dodge, IA 50501
Constructed - Buildings 1937

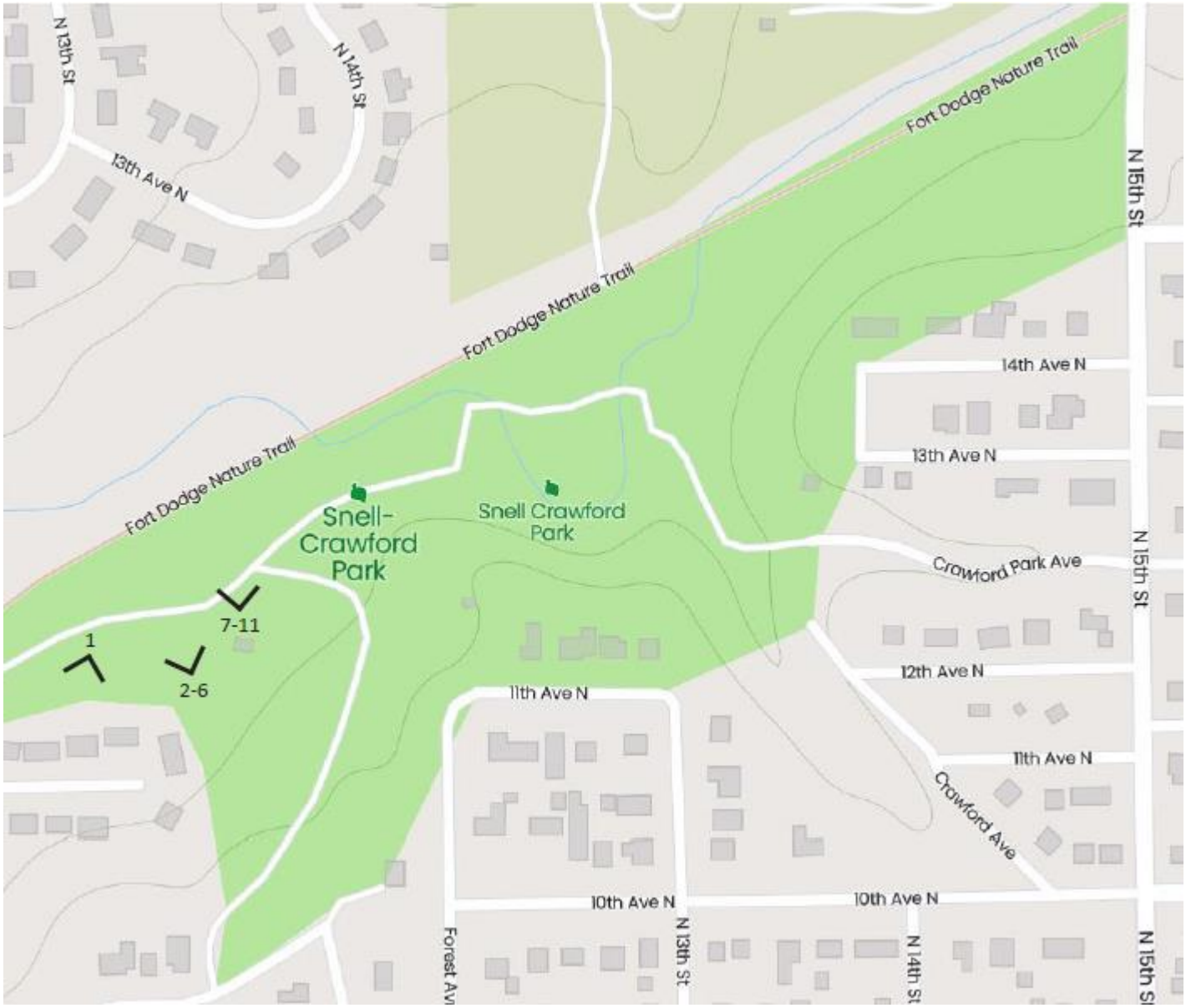

1

Existing accessible parking stalls do not meet accessible requirement. All accessible stalls must be paired with an access aisle. Recommendation to re-stripe and reconfigure the two accessible stalls to provide the following: van-accessible stall meeting one of the two options, at least 11 feet wide with an access aisle at least 5 feet, or at least 8 feet wide an accessible aisle at least 8 feet. The second accessible parking shall be at least 8 feet wide and share the provided access aisle with the van-accessible stall. The access aisle shall adjoin an accessible route connecting parking spaces to accessible entrances.

2

Existing public grills are located off the accessible path. Recommendation is to create an accessible path to existing grills.

3

4

Existing door hardware are not compliant with the standards. Recommendation is to install door hardware on the interior side of the door. Handle to be operable without pinching or turning.

5

Existing threshold of common room exceeds code requirements. Additionally, no accessible route is provided to the common room. Recommend creating an accessible route to the building. When path is poured, slopes to be designed to provide an accessible threshold.

6

Installed work surface is 36”, Per accessible requirements, the tops of work surfaces shall be 28” minimum and 34” maximum above the finish floor or ground. Recommendation to lower countertop by min 2”, max 8” to meet the requirements. Existing outlets above the work surface are above the standards. Outlets to be lowered to a max 48” above finish floor.

7

Existing sign is installed above the standards height restrictions and without braille. Characters on signs shall be located 48” min above the finish floor or ground surface, measured from the baseline of the lowest tactile character and 60” max above the finish floor or ground surface, measured from the baseline of the highest tactile character.

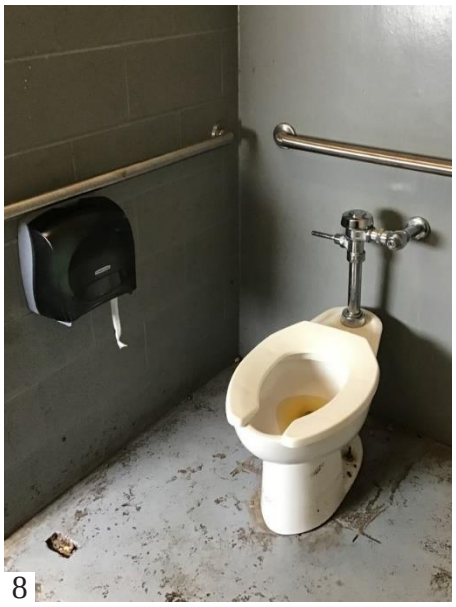

8

Existing flush valve is on the wrong side. Recommendation changing the fixture for the flush valve to be on the accessible side. Side grab bars are not installed per the standards due to infeasibility per existing conditions.

9

Site does not provide an accessible route to the restrooms. Existing threshold is not compliant with the standards. Additionally existing door hardware is not compliant. Door handles to be replaced with a lever set.

10

Existing sign is installed above the standards height restrictions and without braille. Characters on signs shall be located 48” min above the finish floor or ground surface, measured from the baseline of the lowest tactile character and 60“ max above the finish floor or ground surface, measured from the baseline of the highest tactile character.

11

Existing sinks do not provide required pipe wrap. Currently, there is no hot water being supplied to the faucet, obviating the requirements of pipe wrap. If hot water is ever ran to the existing structure, pipe wrap is required.

LOOMIS PARK

N 7th St & Loomis Park Dr, Fort Dodge, IA 50501
Constructed - Boat Building 1930

1

Recommendation to stripe the two accessible stalls to provide the following: All accessible stalls must be paired with an access aisle. Recommendation to re-stripe and reconfigure the two accessible stalls to provide the following: van-accessible stall meeting one of the two options, at least 11 feet wide with an access aisle at least 5 feet, or at least 8 feet wide an accessible aisle at least 8 feet. The second accessible parking shall be at least 8 feet wide and share the provided access aisle with the van-accessible stall. The access aisle shall adjoin an accessible route connecting parking spaces to accessible entrances.

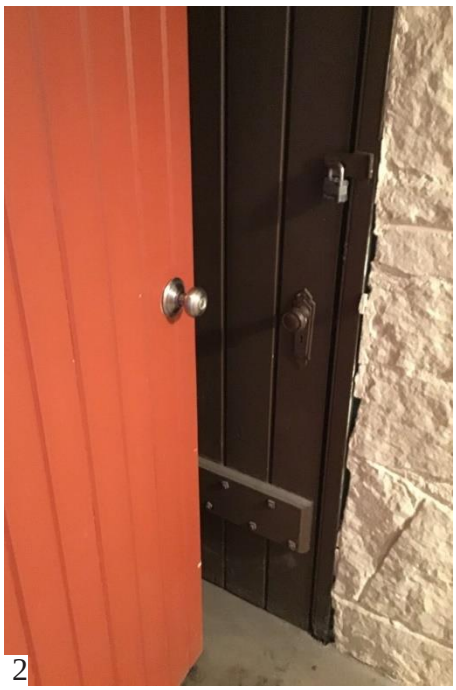

2

Existing door handles do not meet the requirements for grasp-ability. Recommendation is to change all round knobs for lever door handle sets.

3

Existing light switch is installed above the reach ranges within the standards. Recommendation is to lower existing outlet operative parts to be a maximum 48” above finish floor.

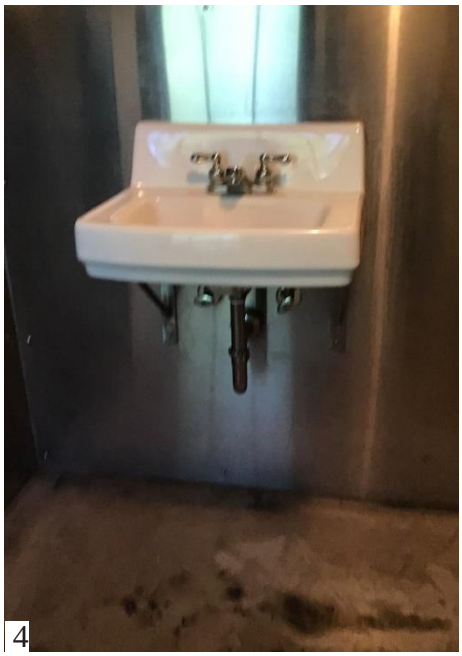

4

5

Existing sink is not in compliant with the standards. Sink is installed above the maximum height of 34 above finish floor. Additionally, pipe wrap is not provided on exposed plumbing pipes. Existing hand dryer should be lower to allow operations a maximum 48” above finish floor.

6

Existing sign is installed above the standards height restrictions and without braille. Characters on signs shall be located 48” min above the finish floor or ground surface, measured from the baseline of the lowest tactile character and 60“ max above the finish floor or ground surface, measured from the baseline of the highest tactile character.

7

Existing toilet is installed 18.5” from side wall exceeding the standards of 16-18” measured from the centerline of the toilet. Additionally, grab bars are not installed per the standards. Refer to the diagrams below for the requirements.

8

Existing soap dispenser is installed above the standards. Recommendation is to lower soap dispenser to operative parts to be a maximum 48” above finish floor.

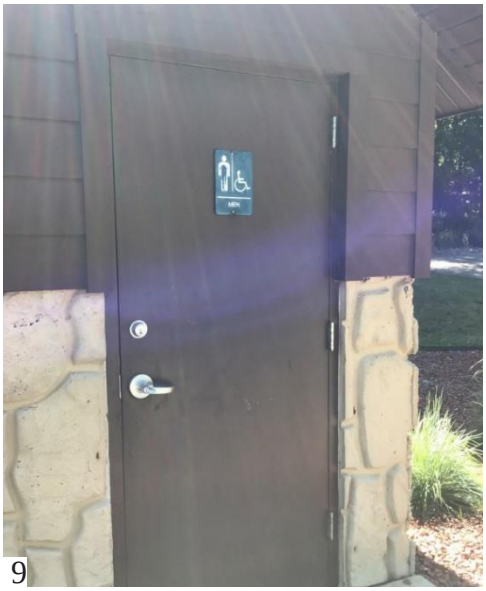

9

Existing sign is installed above the standards height restrictions and without braille. Characters on signs shall be located at least 48” above the finish floor or ground surface, measured from the baseline of the lowest tactile character and 60” max above the finish floor or ground surface, measured from the baseline of the highest tactile character.

10

Existing toilet is installed 18.5” from side wall exceeding the standards of 16-18” measured from the centerline of the toilet. Additionally, grab bars are not installed per the standards. Refer to the diagrams above for the requirements.

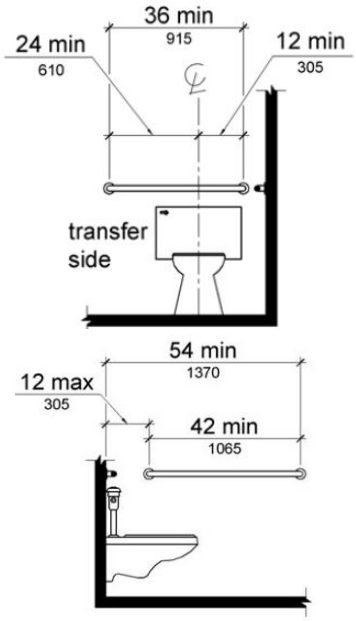

Existing soap dispenser is installed above the standards. Recommendation is to lower soap dispenser to operative parts to be a maximum 48” above finish floor.

Harlan Rogers Sports Complex 1628 Nelson Ave Fort Dodge, IA 50501Constructed – 1970

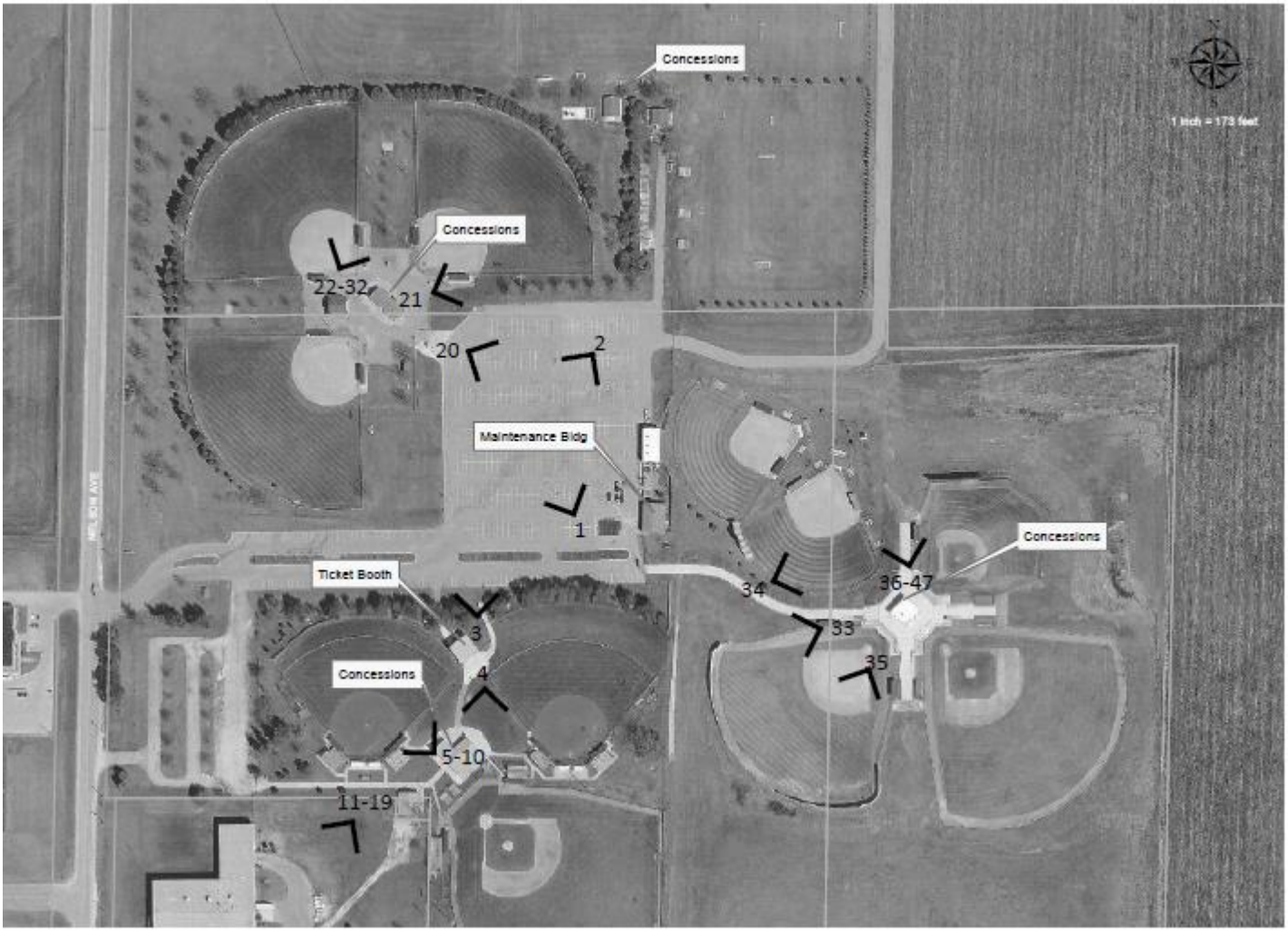

1

2

All accessible stalls must be paired with an access aisle. Recommendation to re-stripe and reconfigure the accessible stalls to provide the following: van-accessible stall meeting one of the two options, at least 11 feet wide with an access aisle at least 5 feet, or at least 8 feet wide an accessible aisle at least 8 feet. The second accessible parking shall be at least 8 feet wide and share the provided access aisle with the van-accessible stall. The access aisle shall adjoin an accessible route connecting parking spaces to accessible entrances.

3

4

Existing ticket booth to the southern fields has four ticket counters. Front counters are 42” above finish floor, above the maximum service counter heights per the standards. Counter on the backside are compliant with the standards. If back counters are used for ticketing, existing conditions are compliant with the standards if proper signage is provided to direct guests to the accessible ticket booths.

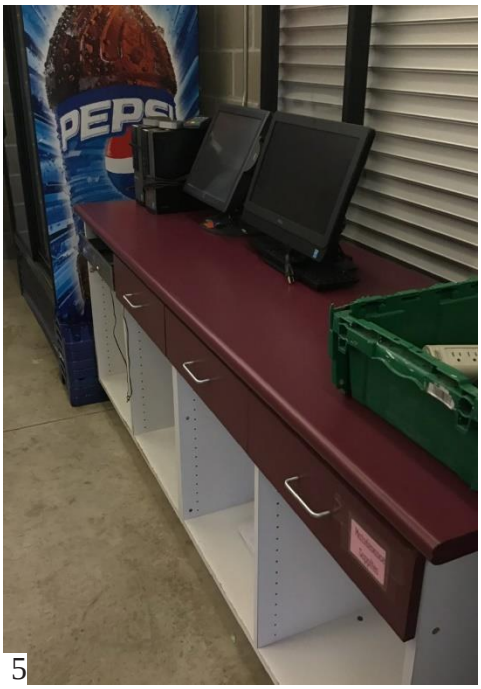

5

6

Existing counters within Southern field concessions are compliant with the standards.

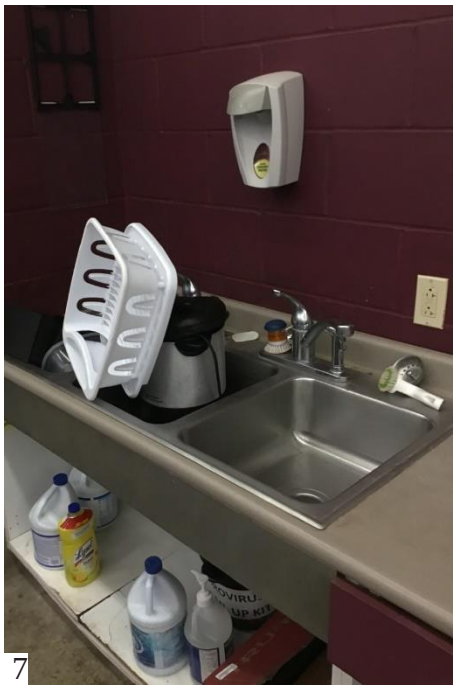

7

Existing sink does not comply with the standards. Countertop is 36” above finish floor, while the standards require 34” at the sink. Recommendation is to modify the casework only at the sink to comply with the standards. Hand soap is installed above the reach ranges within the standards. Recommendation is to lower hand soapto a maximum 48” above finish floor.

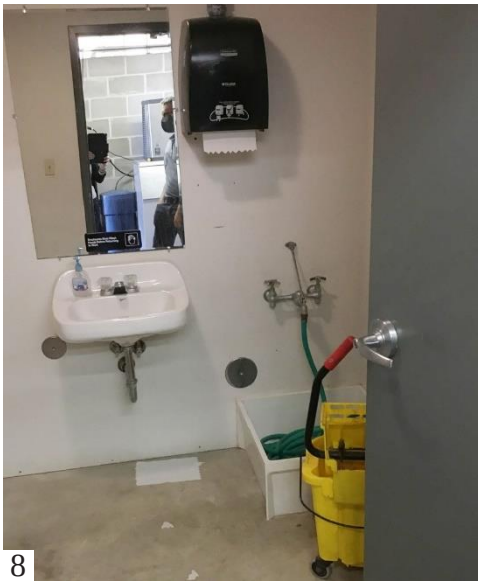

8

Existing paper towel dispenser is installed above the reach ranges in the standards. Recommendation is to lower paper towel dispenser to a maximum 48” abovefinish floor.

9

Existing flush valve is on the wrong side. Recommendation changing the fixture to be on the access side. Existing toilet is installed 18.5” from side wall exceeding the standards of 16-18” measured from the centerline of the toilet.

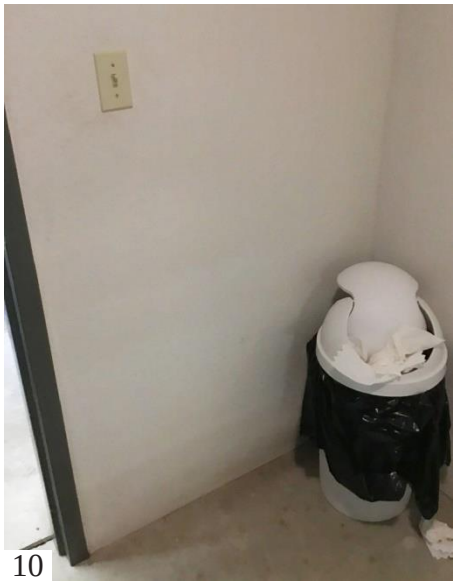

10

Existing light switch is installed above the maximum reach ranges per the standards. Recommendation is to lower lighting switch to a maximum 48”above finish floor.

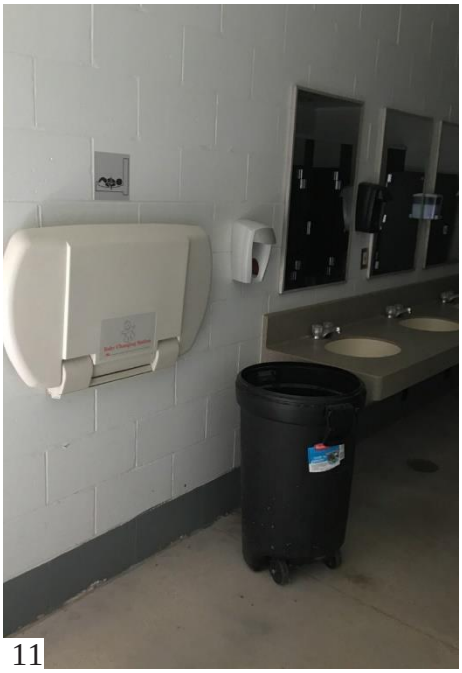

11

Existing baby changer is not installed per the standards. Recommendationis to lower the height of the station to maximum 34” above finish floor when in anopen position. When lowering the height confirm baby changer at an open position allows for a minimum 27” knee clearance.

12

Existing mirror reflective surface is installed 1/2” above the standards. Mirrors located above lavatories or countertops shall be installed with the bottom edge of the reflecting surface 40” maximum above the finish floor or ground. Recommendation is to lower existing mirror to align with the standards. Additionally, soap dispenser is installed above the reach ranges. Soap to be lowered to a maximum 48” above floor finish. Measurement to be taking to operative parts of soap dispenser.

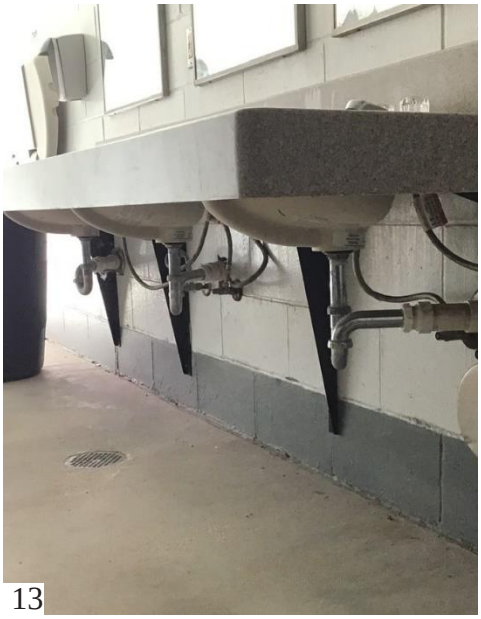

13

Existing sink does not provide pipe wrap. Recommendation is to add pipe wrap.

14

Existing flush valve is on the wrong side. Recommendation changing the fixture for the flush valve to be on the access side. Additionally side grab bars are not installed per the standards. Grab bar to be located 12” from the back wall.

15

Existing sign is installed above the standards height restrictions and without braille. Characters on signs shall be located 48” min above the finish floor or ground surface, measured from the baseline of the lowest tactile character and 60“max above the finish floor or ground surface, measured from the baseline of the highest tactile character.

16

Existing baby changer is not installed per the standards. Recommendationis to lower the height of the station to maximum 34” above finish floor when in anopen position. When lowering the height confirm baby changer at an open position allows for a minimum 27” knee clearance.

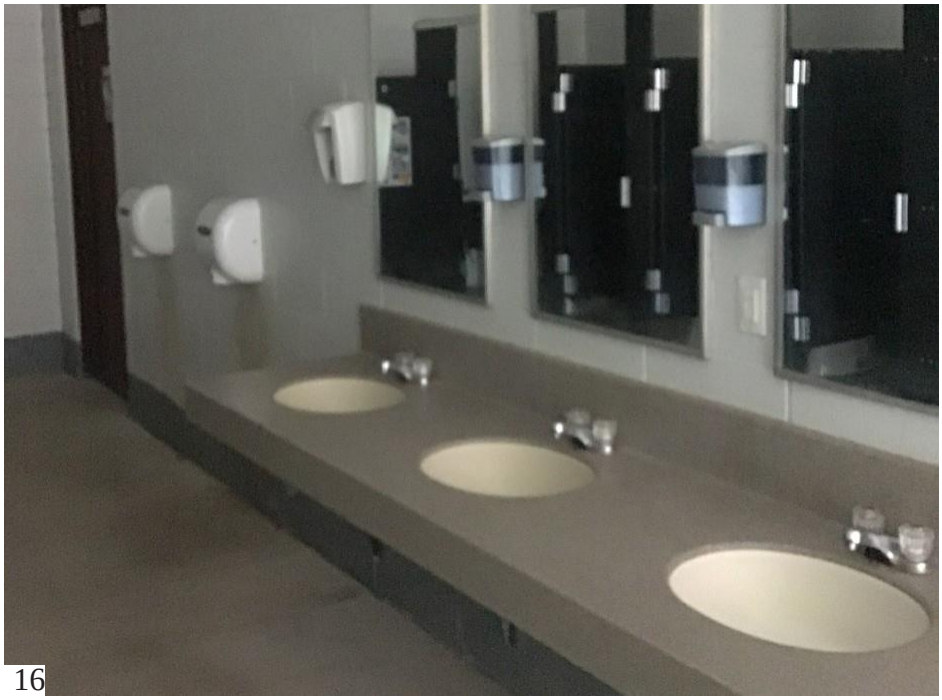

16

Existing mirror reflective surface is installed 1” above the standards. Mirrors located above lavatories or countertops shall be installed with the bottom edgeof the reflecting surface 40” maximum above the finish floor or ground. Recommendation is to lower existing mirror to align with the standards. Additionally, soap dispenser is installed above the reach ranges. Soap to be lowered to a maximum48” above floor finish. Measurement to be taking to operative parts of soap dispenser.

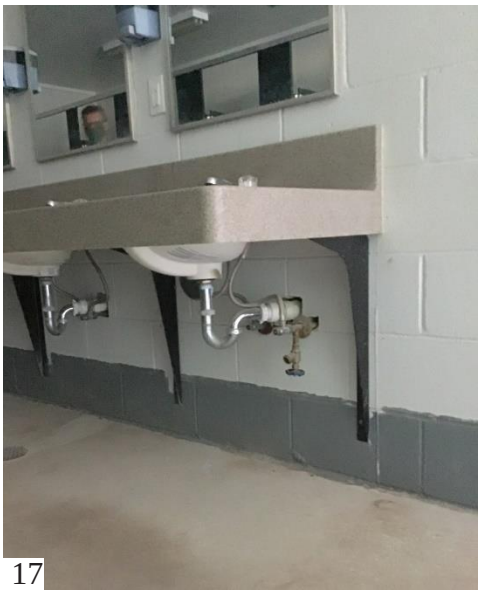

17

Existing sink does not provide pipe wrap. Recommendation is to add pipe wrap.

18

Existing sign is installed above the standards height restrictions and without braille. Characters on signs shall be located 48” min above the finish floor or ground surface, measured from the baseline of the lowest tactile character and 60” max above the finish floor or ground surface, measured from the

19

baseline of the highest tactile character. Existing water fountain does not comply with the standards. Height of spout shall not exceed 36” per the standards. Water fountain to be lowered for compliance. Cane detection is required to be added on both sides of the water fountain.

20

North fields do not provide an accessible route from the parking lot to the facility. Existing routes to be paved to provide an accessible route.

21

Existing concession sink is not compliant with the standards. Recommendationis to be lowered to a maximum 34” above finish floor. When lowering, a min 27” knee clearance is required to be maintained.

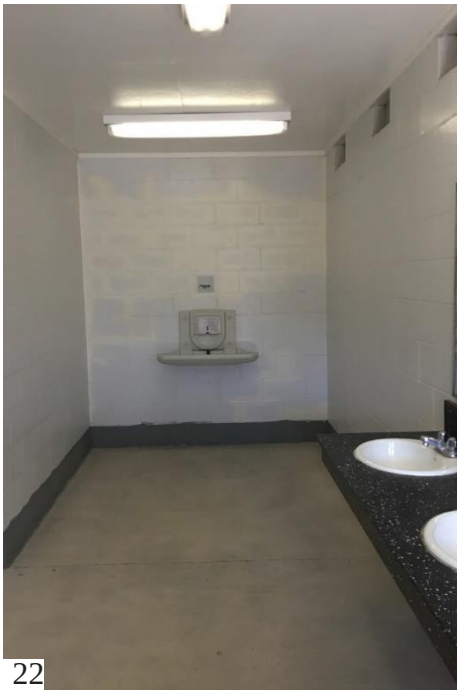

22

Existing baby changer is not installed per the standards. Recommendationis to lower the height of the station to maximum 34” above finish floor when in an open position. When lowering the height confirm baby changer at an open position allows for a minimum 27” knee clearance.

23

Existing mirror reflective surface is installed 1” above the standards. Mirrors located above lavatories or countertops shall be installed with the bottom edge of the reflecting surface 40” maximum above the finish floor or ground. Recommendationis to lower existing mirror to align with the standards. Additionally, soap dispenser is installed above the reach ranges. Soap to be lowered to a maximum 48” above floor finish. Measurement to be taking to operative parts of soap dispenser.

24

Existing sink does not provide pipe wrap. Recommendation is to add additionalpipe protection to cover the full length of plumbing pipe.

25

Hand dryers are installed per the requirements.

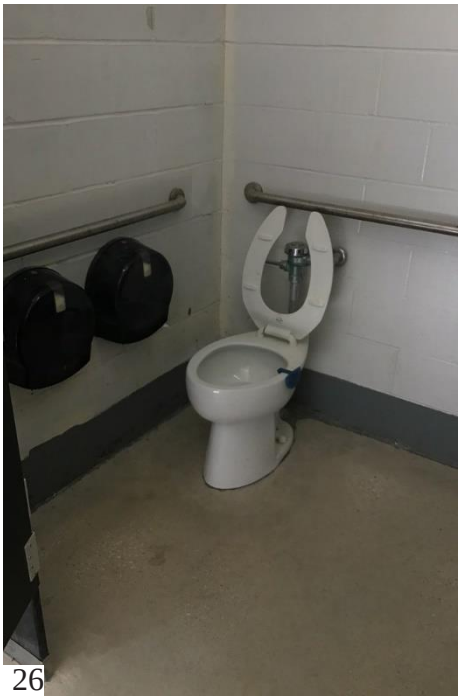

26

Existing flush valve is on the wrong side. Recommendation changing the fixture for the flush valve to be on the access side. Additionally coat hook is installed above the reach ranges. Coat hook to be lowered to a maximum 48” above finish floor.

27

Existing sign is installed above the standards height restrictions and without braille. Characters on signs shall be located 48” min above the finish floor or ground surface, measured from the baseline of the lowest tactile character and 60” max above the finish floor or ground surface, measured from the baseline of the highest tactile character.

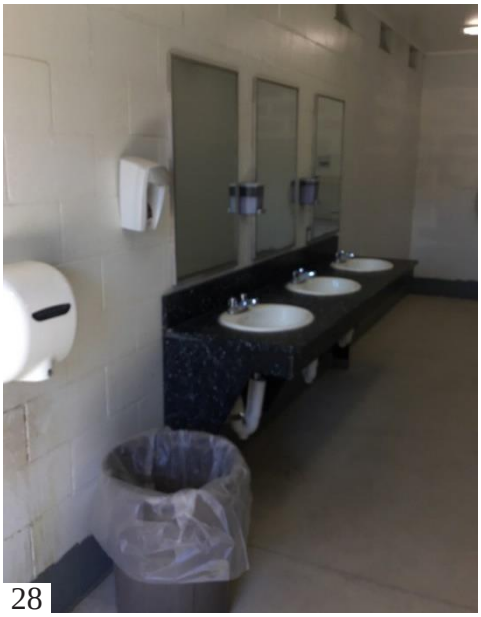

28

Existing mirror is installed 1” above the standards. Mirrors above lavatories or countertops shall be installed with the bottom edge of the reflecting surface 40” maximum above the finish floor or ground. Recommend lowering existing mirror to align with the standards.

29

Soap dispenser is installed above the reach ranges. Soap dispenser operative parts should be at a max of 48” above floor finish. Existing sink does not provide pipe wrap. Recommendation is to add additional pipe protection to cover the full length of plumbing pipe.

30

Existing baby changer is not installed per standards. Recommendationis to lower the height of the station to maximum 34” above finish floor when in an open position. When lowering theheight confirm baby changer at an openposition allows for a minimum 27” knee clearance.

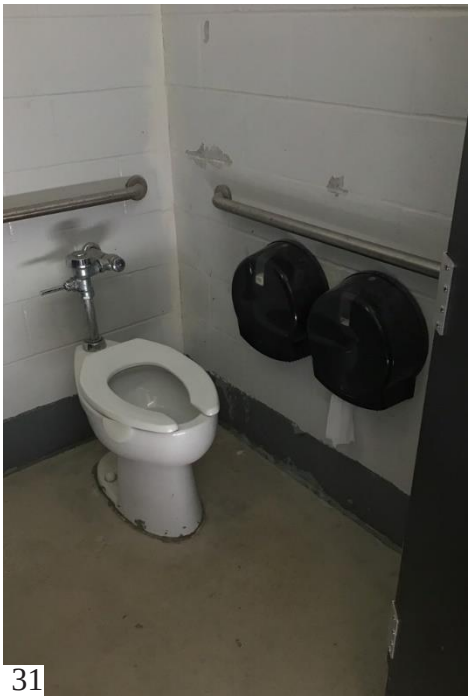

31 Coat hook within accessible stall is installed above the reach ranges. Coat hook to be lowered to a maximum 48” above finish floor.

32 Existing sign is installed above the standards height restrictions and without braille. Characters on signs shall be located 48” min above the finish floor or ground surface, measured from the baseline of the lowest tactile character and 60” max above the finish floor or ground surface, measured from the baseline of the highest tactile character.

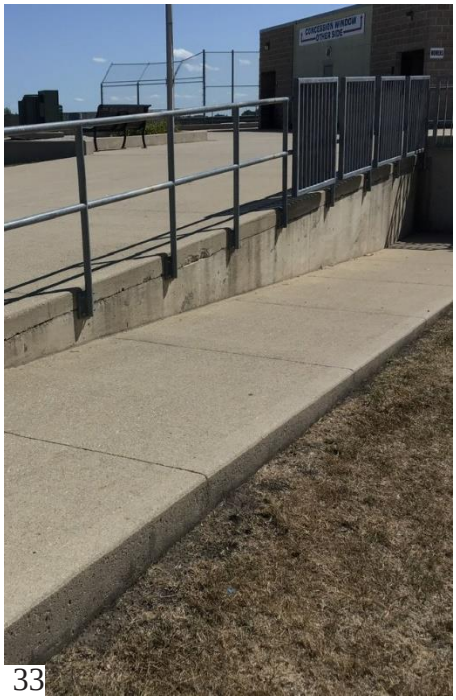

33 Existing ramp to the East fields.

34 Existing slopes to East Fields exceed the standards requirements. Per existing slopes, it is infeasible to provide a compliant accessible route from the accessible stalls to the East Fields.

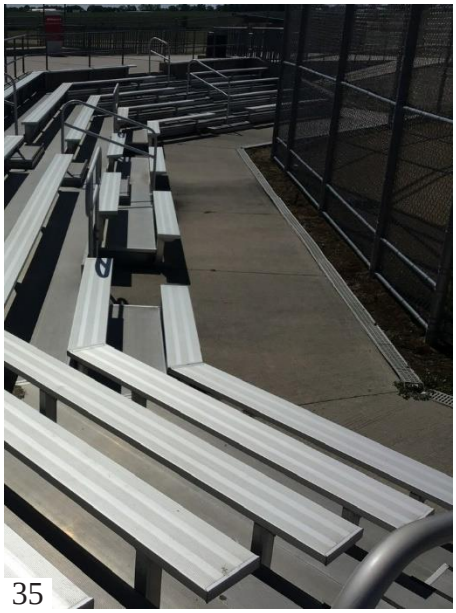

35 Accessible seating is provided at the East Fields.

36

Existing sign is installed above the standards height restrictions and without braille. Characters on signs shall be located 48” min above the finish floor or ground surface, measured from the baseline of the lowest tactile character and 60” max above the finish floor or ground surface, measured from the baseline of the highest tactile character.

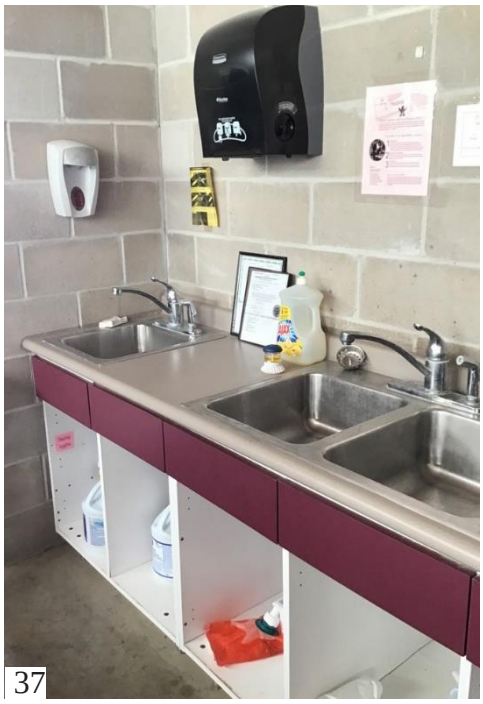

37

Existing sink does not comply with the standards. Countertop is 36” above finish floor, while the standards require 34” at the sink. Recommendation is to modify the casework only at the sink to comply with the standards. Hand soap is installed above the reach ranges within the standards. Recommendation is to lower hand soap to amaximum 48” above finish floor.

38

Existing sink does not provide pipe wrap. Recommendation is to add pipe protection.

39

Hand dryer is installed per the standards.

40

Baby change station is not installed per standard. We recommend lowering the height of station to maximum 34” above finish floor when in open position. After lowering, station must allow for a minimum 27” knee clearance when open.

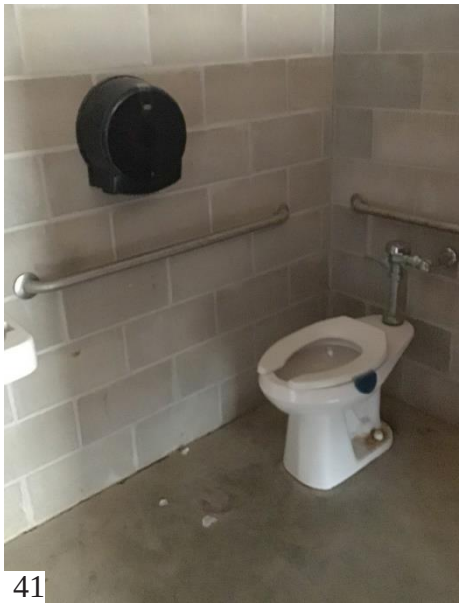

41

Existing flush valve is on the wrong side. Recommend changing the fixture for the flush valve to be on the access side.

42

Existing sign is installed above the standards height restrictions and without braille. Characters on signs shall be located 48” min above the finish floor or ground surface, measured from the baseline of the lowest tactile character and 60“max above the finish floor or ground surface, measured from the baseline of the highest tactile character. Replace sign as contrasting colors is faded.

43

Existing sink does not provide pipe wrap.Recommendation is to add pipe protection.

44

Hand dryer is installed per the standards.

45

Existing flush valve is on the wrong side. Recommend changing the fixture for the flush valve to be on the access side.

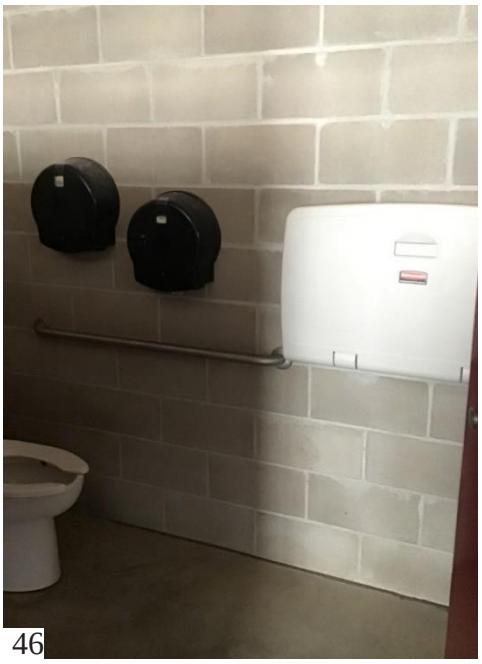

46

Existing baby changer is not installed per the standards. Recommend lowering the station to max 34” above finish floor when in an open position. When lowering the height confirm baby changer at an open position allows for a minimum 27” knee clearance.

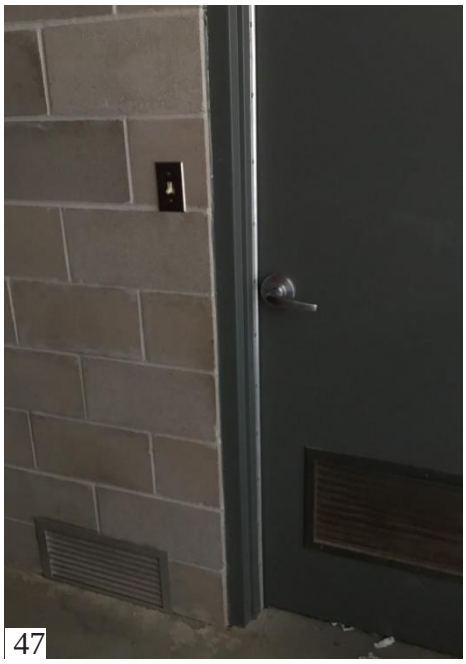

47

Existing light switch is installed above the standards. Recommendation is to lower existing light switch to a maximum 48”

Olson Park
12th Ave South & South 17th St Fort Dodge, IA 50501
Constructed - N/A

1

Recommendation to re-stripe and reconfigure the two accessible stalls to provide the following: van-accessible stall meeting one of the two options, at least 11 feet wide with an access aisle at least 5 feet, or at least 8 feet wide an accessible aisle at least 8 feet. The second accessible parking shall be at least 8 feet wide and share the provided access aisle with the van-accessible stall. The access aisle shall adjoin an accessible route connecting parking spaces to accessible entrances

2

Existing water fountain meets therequirements.

Existing threshold does not align with the standards. Recommendation is to modify existing sidewalk leading to the entry.

Existing switches and counter are installed above the standards. Recommendation is to lower work surfaceto 34” above finish floor.

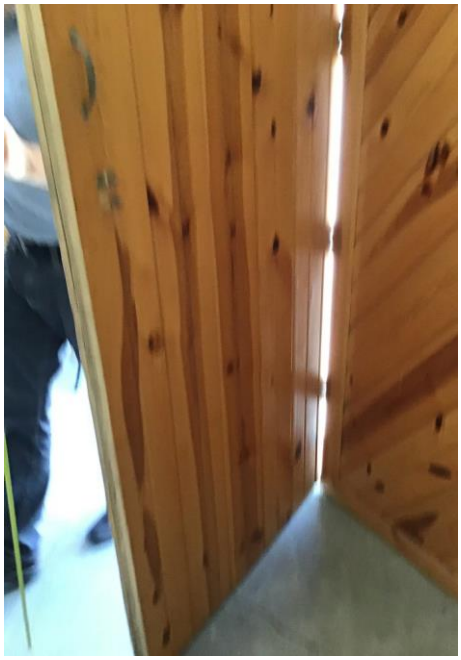

Existing door handle installed above the reach ranges and requires grasp-ability to utilize the door. Recommendationis to replace door handle with a lever set installed at typical mounting heights of door hardware.

HYDRO-ELECTRIC PARK

819 1st S Ave Fort Dodge, IA 50501
Constructed - 1939

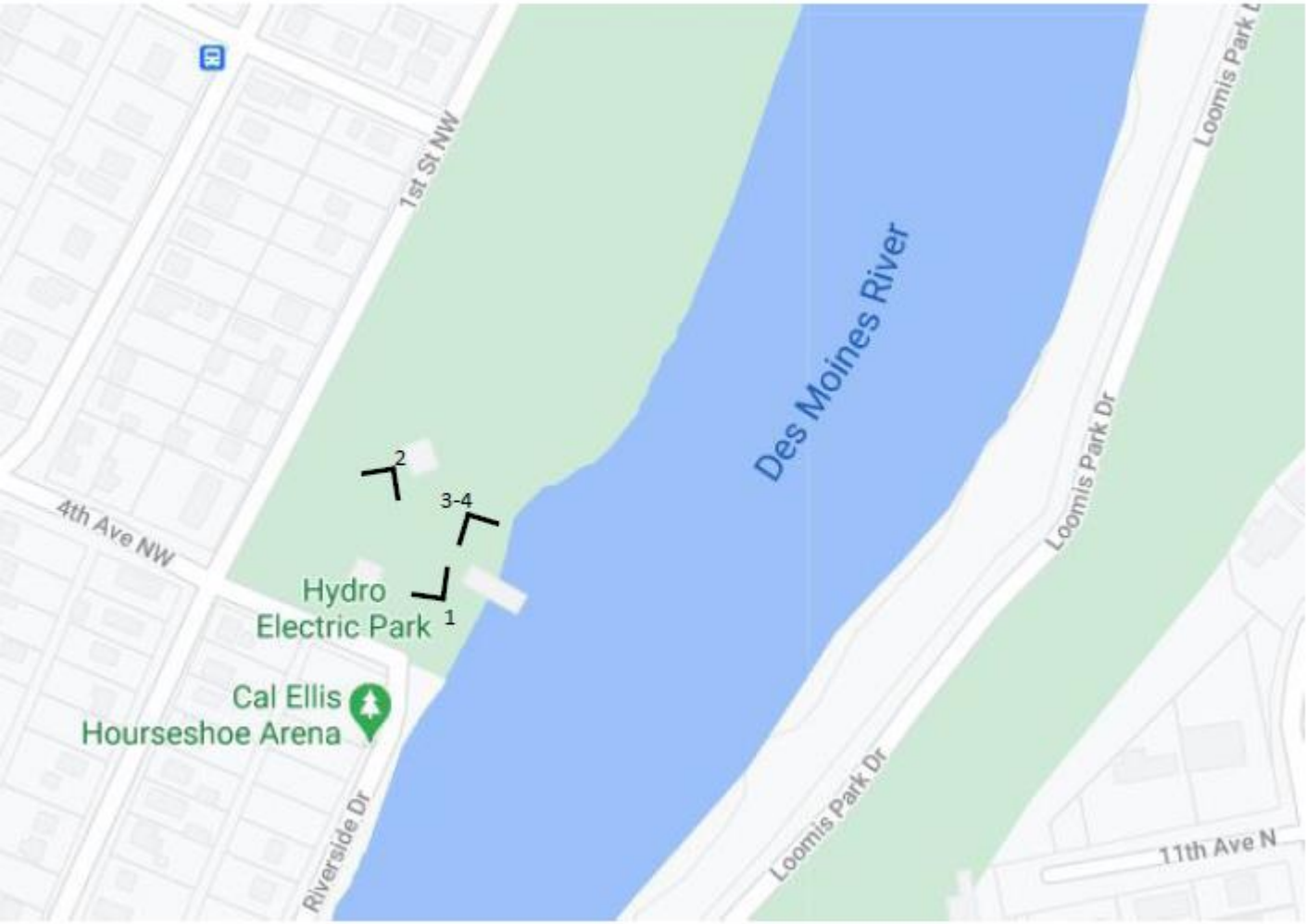

1

Parking lot does not have accessible stalls. Recommendation to stripe an accessible stall to provide the following: van-accessible stall meeting one of the two options, at least 11 feet wide with an access aisle at least 5 feet, or at least 8 feet wide with an accessible aisle at least 8 feet wide. The access aisle shall adjoin an accessible route connecting parking

2

Existing switches and counter are installed above the standards. Recommendation is to lower work surface to 34” above finish floor and switches to a maximum 48” above finish floor.

3

4

Existing restrooms in the outhouse building to the Work Progress Administration Building was built prior to the adoption of the standard. The existing building restrooms are structurally infeasible to meet accessible code.

Work Progress Administration Building does not provide an accessible route from the parking lot to the building. Existing route to be paved to provide an accessible route.

Oleson Park Shelter

1400 Oleson Park Ave
Constructed – 2022

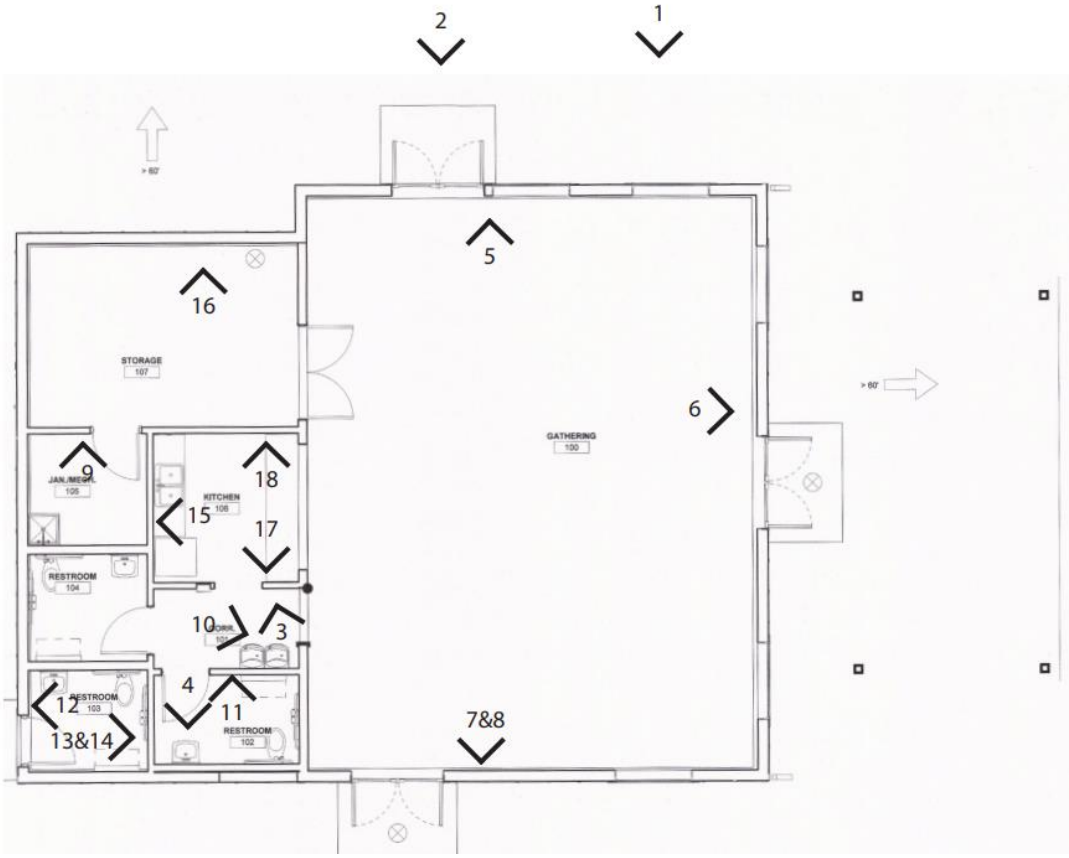

1

One accessible stall is missing signage. Recommendation to provide signage matching what is provided at other stall at 60” minimum above ground surface.

2

Trash can is located within required clearances at entry door. Recommendation to relocate trash can minimum 5’ away from door.

3

Thermostat is located more than 48” above floor. Recommendation to relocate below 48”.

4

Electrical outlet is more than 48” above the floor. Recommendation to relocate below 48” and patch and paint as necessary.

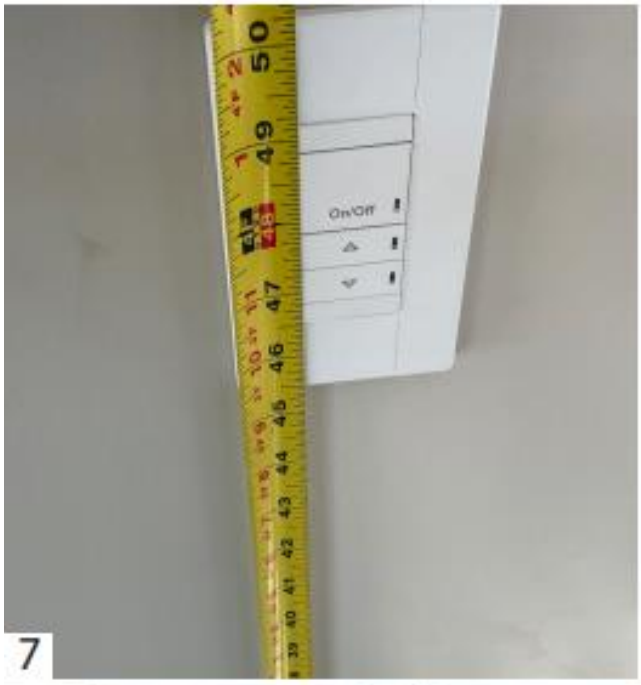

Lighting and fan controls are located above 48” in many locations. Recommendation to relocate switches below 48” and patch drywall and paint as necessary.

Lighting controls and outlet are located above 48” in many locations. Recommendation to relocate switches below 48” and patch drywall and paint as necessary.

Grab bars are located more than 36” above floor and does not extend to 54” from the back wall. Recommendation relocate grab bars between 33” and 36” above the floor and 54” from back wall to far end of grab bar and patch and paint as necessary.

Lighting controls and outlets located above a counter are above 46” above the floor. Recommendation to relocate switches and outlets below 46” and patch drywall and paint as necessary.

Mechanical equipment is below 80” from floor. Recommendation raise equipment to provide required clearances.

Lighting controls and outlets located above a counter are above 46” above the floor. Recommendation to relocate switches and outlets below 46” and patch drywall and paint as necessary.

Bus Shelter

21 S 9th St
Constructed – N/A

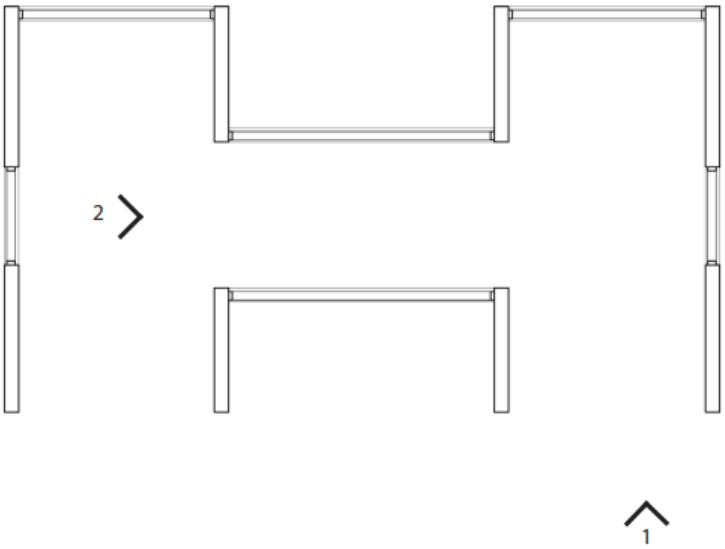

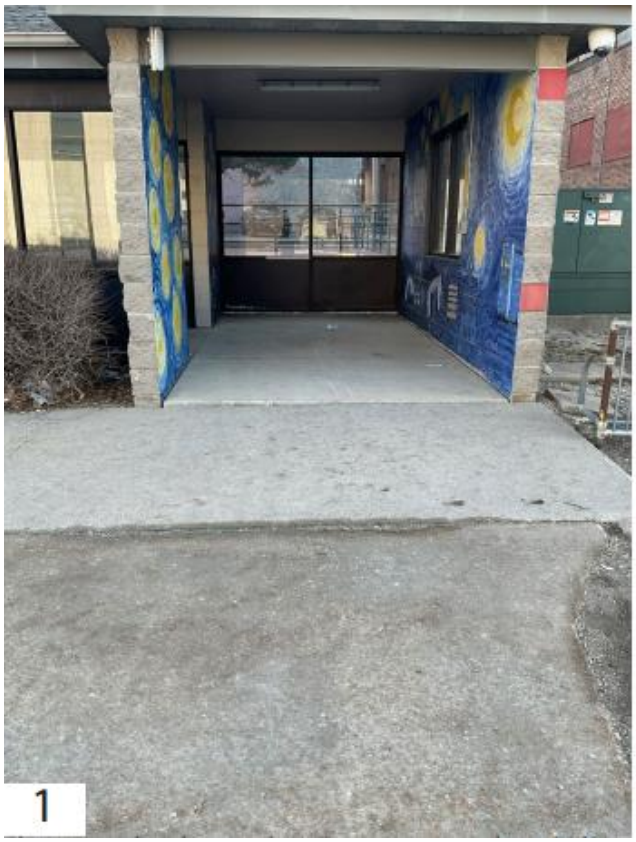

Changes in level exceed 1/2" at entrance to bus shelter and in sidewalk. Recommendation replace sidewalk to provide a level and flush ground surface.

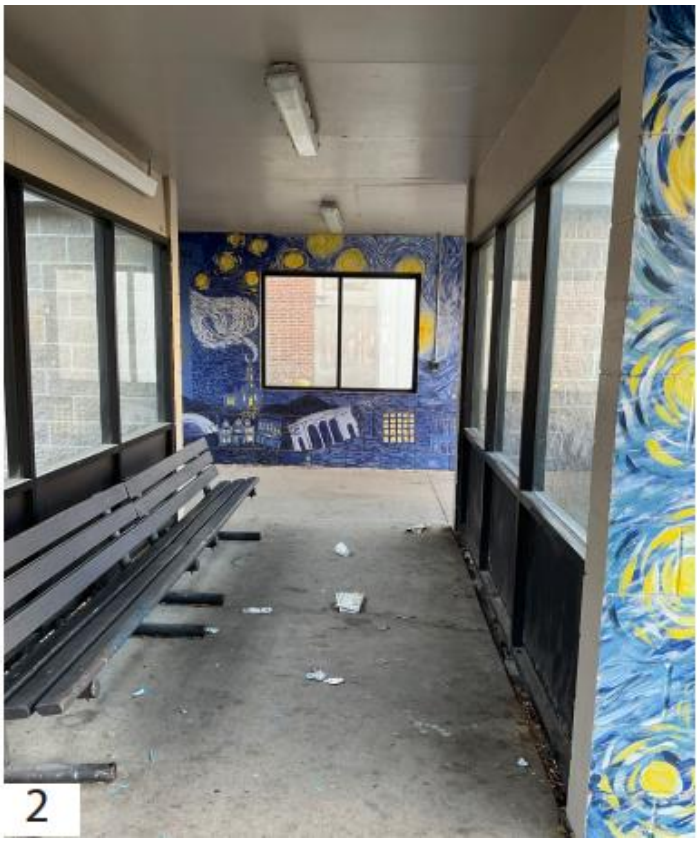

Benches do not meet depth requirements. Recommendation replace benches with compliant option with a seat depth of 20- 24" height of 17-19" and a back rest height of 18"

K. Scope Of Work

1. Summary

Each building has the following items which deviate from the accessibility standards. Some of these buildings were constructed prior to accessibility adoption and are not required to be modified to meet current codes, but as renovations happen in the future these modifications should be incorporated to the greatest extent possible. If budgets or identified scope restricts the extent of renovations, the *Prioritization* paragraph of this report offers recommendations. Scope of work items below have been noted with a priority number corresponding to that paragraph. Budget numbers are reflective of scope costs plus an allowance for contractor overhead and profit.

Depending on size of work packages there would be an economy of scale if larger work packages are considered.

2. Scope Prioritization of Existing Facilities

Beyond planned renovations, budget parameters and/or Community requests, please consider projects which address the higher priority designations and ones which affect the greatness number of citizens. In review of our findings and assuming a goal of addressing roughly half of the total budget, it would be our recommendation to begin with the following scope of work; Municipal Building, Lakeside Golf Course, Senior Center, Public Library and Harlan Sports Complex. The total budget for this work would be $69,850.

L. Buildings

1. Municipal Building

- Ramp within council chambers - re-work rise/run and extend the handrails. **Priority 2.**
- Men - unisex restroom door - move over 1” or swing the door out. **Priority 3.**
- Lower mirrors within women’s restroom on level 2 by 1”. **Priority 3.**
- Modify shroud at women’s vanity - only 7" for the room reduction - min 8" required. **Priority 3.**
- Women’s restroom - level 2, move back wall grab bar. **Priority 3.**
- Lower height of side and rear grab bars (current 27.5" AFF). **Priority 3.**
- Men’s restroom - level 2 – lower countertop. **Priority 3.**
- Repaint the accessible parking stalls paint striping. **Priority 6.**

Budget Pricing		
Description	**Priority**	**Budget Cost**
Ramp/Handrail Modifications	2	$6,250
Replace door frame/patch drywall/paint	3	$4,375
Lower mirrors/touch-up paint	3	$1,875
Modify p-lam shroud	3	$1,875
Move grab bars/patch/paint	3	$1,875
Lower countertop/adjust plumbing connections	3	$3,750
Repaint parking striping	6	$1,250

2. Lakeside Municipal Golf Course

- Cane detection at drinking fountain. **Priority 2.**
- Modify sales counter for accessible access of 36"Wx34"H. **Priority 2.**
- Modify restroom entry door clearance – disproportionate cost.
- Lower restroom signage, both restrooms. **Priority 3.**
- Lower restroom mirrors, both restrooms. **Priority 3.**
- Lower paper towel dispenser or move trash can to provide access to hand drier, both restrooms. **Priority 3.**
- Lower coat hook at changing bench, both restrooms. **Priority 3.**
- Toilet installed 2” too far from wall/grab bars. Fur out wall and move grab bars, both restrooms. **Priority 3.**
- Re-stripe parking stalls with access aisles. **Priority 6.**
- Lower calendar if this is modified by the public.

Budget Pricing		
Description	**Priority**	**Budget Cost**
Cane detection at drinking fountain	2	$1,250
Modify sales counter	2	$1,875
Lower restroom signage, both restrooms	3	$625

Lower restroom mirrors, both restrooms	3	$1,875
Lower paper towel dispensers	3	$375
Lower coat hook, both restrooms/patch&paint	3	$625
Fur out wall/move grab bars, both restrooms	3	$4,375
Repaint parking striping	6	$1,250

3. Fort Dodge Regional Airport

- Add cane guard below defibrillator. **Priority 2.**
- Private plane kitchenette - Lower sink cabinet to meet 34” height requirement. Either 36” wide with knee space or 48” wide side approach. **Priority 2.**
- Private plane restroom - Lower coat hook in restroom to below 48”. **Priority 3.**
- Private plane restroom - Move paper towel dispenser to max 48” high to paper. **Priority 3.**
- Public restroom F - Move toilet partition 1” to meet minimum clear space between lavatory and partition of 32”. **Priority 3.**
- Public female restroom - Raise baby changing station 7” to provide knee clearance. **Priority 3.**
- Public female restroom - Flip plumbing valve to opposite side of toilet. **Priority 3.**
- Public male restroom - Lower one hand drier to meet reach range. **Priority 3.**
- Public male restroom - Lower existing mirrors/shelves to 40” AFF. **Priority 3.**
- Drinking fountain is mounted 1” too low for required knee space. **Priority 5.**
- Re-stripe parking stalls to add access aisles/van space. **Priority 6.**

Budget Pricing		
Description	**Priority**	**Budget Cost**
Add cane protection below defibrillator	2	$1,250
Kitchenette counter/plumbing modification	2	$1,875
Lower coat hook and towel dispenser	3	$625

Move toilet partition	3	$1,875
Move baby changing station	3	$312
Flip plumbing valve	3	$1,562
Lower hand drier	3	$1,562
Lower mirrors/shelves	3	$938
Raise drinking fountain	5	$1,562
Repaint parking striping	6	$2,500

4. Blanden Memorial Art Museum

- Add cane detection to wall heater in vestibule. **Priority 2.**
- Add cane detection to drinking fountain. **Priority 2.**
- Art room - change door leaf widths and change to lever style hardware. **Priority 2.**
- Art room - Lower paper towel dispenser. **Priority 2.**
- Art room - Lower fire extinguisher. **Priority 2.**
- Art room - Lower T-stat in art room to 48” to top of controls. **Priority 2.**
- Art room - Lower sink base cabinet to 34” AFF. Suggest changing cabinet to provide knee access. **Priority 2**.
- Lower level - lower defibrillator and cup dispenser to within reach range of 48” AFF. **Priority 2.**
- Move fire alarm pull station to within reach range. **Priority 2.**
- Lower thermostat to within reach range. **Priority 2.**
- Change lower level door hardware to lever style, typical (3) doors. **Priority 2.**
- Replace sidewalk from parking space to entry door and create a ramp which aligns with accessible aisle. **Priority 6.**
- Re-stripe parking to create access aisle. **Priority 6.**

Budget Pricing		
Description	**Priority**	**Budget Cost**
Cane detection at wall heater	2	$1,250
Cane detection at drinking fountain	2	$1,250

Art room door change	2	$1,875
Art room lower paper towel/fire extinguisher/t-stat	2	$1,875
Art room lower sink counter	2	$1,875
Lower defibrillator and cup dispenser	2	$1,250
Lower fire alarm pull station	2	$938
Lower t-stat	2	$938
Change lower level door hardware to lever style (3)	2	$1,875
Replace sidewalk and create ramp	6	$70 per SY
Repaint parking striping	6	$1,250

5. Senior Center

- Replace oven with accessible oven. **Priority 2**
- Sink/cabinet modification in the common room on level 1 Note. **Priority 2**
- Fire Alarm Pull - lowering height. **Priority 2**
- Door at Second Floor - relocate or swing out to meet pull side clearance minimum of 18”. **Priority 2.**
- Second floor sink / casework modifications. **Priority 2.**
- Add cane detection to drinking fountains on level 1 and 2. **Priority 2.**
- Level 1 - Flip men and women's accessible toilets (to get flush valves on the right side). **Priority 3**
- Add pipe wrap mens RR - level 1. **Priority 3**
- Level 2 - Flip men and women's accessible toilets (to get flush valves on the correct side. **Priority 3.**
- All accessible stalls - revise back wall grab bar - closer to side wall. **Priority 3.**
- Lower coat hook on L2 W RR accessible stall. **Priority 3.**
- Re-stripe parking lot to provide accessible access aisle + add accessible. **Priority 6.**

Budget Pricing		
Description	**Priority**	**Budget Cost**
Replace oven	2	$1,250
Sink cabinet replacement (level 1)	2	$1,875
Fire alarm pull	2	$938
Sink cabinet replacement (level 2)	2	$1,875
Add cane detection at water fountains (level 1&2)	2	$2,500
Flip toilets so flush valves on correct side (levels 1&2)	3	$1,500
Add pipe wrap at men's restroom	3	$375
Move grab bars/patch/paint	3	$1,875
Lower coat hook	3	$375
Repaint parking striping	6	$1,250

6. Library

- Break room sink - modify to 34" height counter. **Priority 2.**
- Community Room Fire-Extinguisher Lower to Reach Range. **Priority 2.**
- Hand sink 36- height in bookstore. **Priority 2.**
- Hand sink 36" counter in conference room - lower counter to 34". **Priority 2.**
- Hand sink 36" counter in community room - lower counter to 34. **Priority 2.**
- Cane detection at Defibrillator. **Priority 2.**
- Big conference room door clearance at kitchen. **Priority 2.**
- Men's RR toilet too far from the wall. **Priority 3.**
- Employee single sex RR - Toilet 18 1/2 from wall. **Priority 3.**
- Pipe Protection in both RR's. **Priority 3.**
- Women's RR - Toilet location - 15.5" from wall. **Priority 3.**
- Women RR Grab bars - Back too far from side wall - Side too far from back wall. **Priority 3.**
- Women's soap dispenser height - 48.5" from finish floor. **Priority 3.**
- Re-stripe parking to create access aisle. **Priority 6.**

Budget Pricing		
Description	**Priority**	**Budget Cost**
Break room sink cabinet	2	$1,875
Community room fire extinguisher	2	$312
Book store hank sink height	2	$1,875
Community room sink cabinet	2	$1,875
Add cane protection to deliberator	2	$1,250
Remove cabinets to create door clearance	2	$3,750
Move toilets (3)	3	$3,750
Pipe protection (2)	3	$625
Soap dispenser height	3	$312
Move grab bars/patch/paint	3	$1,875
Repaint parking striping	6	$1,875

7. Fire Station
    - Fitness Entry Door – No clearance **If on the public route
    - Public RR - Toilet 18.5" from the wall
    - Public RR - Mirror installed above the standards - 40.75" to reflective surface
    - Signage too high

Budget Pricing		
Description	**Priority**	**Budget Cost**
Move all signage	2	$1,250
Move toilet or fur out wall	3	$1,875
Lower mirrors/touch-up paint	3	$938

8. Oleson Park Building
    - Switches – too high. **Priority 2**
    - Outlets – too high. **Priority 2**
    - Accessible parking sign – missing.

- Trash can – within door clearance. **Priority 1**
- Thermostat – too high. **Priority 6**
- Grab bar – too high and close to back wall. **Priority 3**
- Mechanical equipment – too low. **Priority 6**

Budget Pricing		
Description	**Priority**	**Budget Cost**
Lower outlet/switch height	2	$1,250
Replace accessible parking sign	6	$625
Relocate trash can	1	$625
Lower thermostat	6	$938
Relocate grab bar	3	$625
Raise mechanical equipment	6	$1,875

9. Bus Shelter

- Bench – not accessible. **Priority 6**
- Floor/sidewalk - not level. **Priority 2**

Budget Pricing		
Description	**Priority**	**Budget Cost**
Replace benches	6	$1,250
Demo and replace sidewalk	2	$70 per SY

M. PARKS

1. Aquatic Center

Add cane detection at outdoor drinking fountains. **Priority 2.**

Single Toilet – Add pipe wrap. **Priority 3.**

Restripe accessible parking stalls. **Priority 6.**

Budget Pricing		
Description	**Priority**	**Budget Cost**
Cane detection at drinking fountains	2	$1,000
Pipe wrap at single toilet	3	$500
Repaint parking striping	6	$2,000

2. Snell Crawford Park

- Add paved accessible route to RR's and community room. **Priority 1.**
- Existing door hardware at shelter does not meet accessible requirements and has no controls on interior side. **Priority 1.**
- Revise existing door threshold to meet vertical transition requirements. **Priority 1.**
- Add accessible path to public grills. **Priority 2.**
- Lower existing or add countertop in Community room which meets accessibility requirement of max34”. **Priority 2.**
- Door Hardware to restrooms - knobs to be replaced with levers. **Priority 2.**
- Lower switch and outlets. **Priority 2**.
- Men’s RR - Toilet Valve wrong side, change tank. **Priority 3**.
- Women’s RR - Toilet valve on wrong side, change tank **Priority 3.**
- Men’s RR - side grab bar - installed too small/installed too close to back wall **infeasible
- Women’s RR - side grab bar - installed too small/installed too close to back wall **infeasible
- Add signage on RR's with braille. **Priority 3**.
- Re-stripe parking stalls to add access aisle. **Priority 6**.

Budget Pricing		
Description	**Priority**	**Budget Cost**
Add concrete sidewalk from parking to main entry	1	$70 per SY
Change entry door hardware to lever type	1	$625
Change door threshold and raise sidewalk	1	$70 per SY

Add sidewalk to grill	2	$70 per SY
Lower counter	2	$1,250
Change door hardware to lever type (2), Restrooms	3	$1,250
Lower switch/outlets	3	$1,250
Change toilet tanks/flush valves (2)	3	$1,250
Add signage with braille	3	$625
Repaint parking striping	6	$1,250

3. Loomis Park

- Doorknobs in Boat House - Change round to lever sets. **Priority 1.**
- Charcoal Grill – Extend concrete to connect to the accessible route. **Priority 2.**
- Boat House restroom. **Priority 3.**
    - Lower light switches
    - Lower hand dryer.
    - Existing RR door opening - Clear opening 29 1/2". Technical feasibility and disproportionalitywould apply.
    - Lower sink and add pipe wrap.
- Restroom Building **Priority 3.**
    - Men's
        1. Move toilet - too far from side wall
        2. Move back grab bar - installed too far from side wall
        3. Move side grab bar - installed too far from back wall
        4. Lower soap dispenser
        5. Replace sign with braille
    - Women's
        1. Move toilet - too far from side wall
        2. Move back grab bar - installed too far from side wall
        3. Move side grab bar - installed too far from back wall
        4. Lower soap dispenser
        5. Replace sign with braille
- Re-stripe parking stalls to add access aisle. **Priority 6.**

Budget Pricing		
Description	**Priority**	**Budget Cost**
Replace entry door hardware to lever type	1	$1,250
Add concrete to grill	2	$70 per SY
Lower light switches/hand drier – Boat house	3	$1,250
Lower sink and add pipe wrap – Boat house	3	$1,250
Move toilets (2) – Restroom block	3	$1,250
Move grab bars/patch/paint M/W - Restroom block	3	$1,250
Lower soap dispensers	3	$312
Add signage with braille	3	$625
Repaint parking striping	6	$625

4. Harlan Rogers Sports Complex

- Ticket booth 42" countertop **confirm with operations if counter on other end of the building is used forthe same function.
- Concession Building 1. **Priority 2.**
    - Sink too high - 34.5"
    - Hand Soap too high - 55"
    - RR toilet flush valve on the wrong side + toilet 19" from wall
    - RR - paper towel too high - 59"
    - RR - light switch - too high (50")
    - Drinking fountain - too high (39") **Priority 5.**
- Add cane detection. **Priority 2.**
- RR Building - **Priority 3.**
    - Men's
        1. Baby changer - too high 38"
        2. Soap too high (51")
        3. Flush valve on wrong side
        4. No pipe protection
    - Women's
        1. Baby changer - too high 38"

2. Soap too high (58")
3. Mirror too high (41")
4. No pipe protection
5. Side grab bar too close to back wall to meet min 52" requirements

- North Fields - no accessible access due to lack of pavement
- North Field Concessions - Sink too high (36"). **No change required prior to adding accessible path.**
- North Field Restrooms. **No change required prior to adding accessible path.**
  - Men's
    1. Mirror too high (41")
    2. Baby Change too high (36")
    3. Coat hook on toilet stall too high (54")
    4. Soap too high (58")
    5. No accessible signage with Braille
    6. Toilet Flush Valve on Wrong side
  - Women's
    1. Mirror too high (41")
    2. Baby Change too high (36")
    3. Coat hook on toilet stall too high (54")
    4. Soap too high (58")
    5. No accessible signage with Braille

- East Field - Note route from accessible parking stall is infeasible to provide maximum slopes per the standards.
- East Field – Concessions. **Note accessible path does not meet slope requirements.**
  - Sink too high (364.75")
  - Paper towel too high (59")
  - Soap is too high (59")
- East Field Restrooms. **Note accessible path does not meet slope requirements.**
  - Men's
    1. Sign height + contrasting color worn off. Replace Sign

2. Sink too high (35")
3. No pipe wrap
4. Changing table too high (36")
5. Light switch too high (51")
6. Toilet flush valve on wrong side

- Women's
  1. Sign height + contrasting color worn off. Replace Sign
  2. Sink too high (35")
  3. No pipe wrap
  4. Changing table too high (36")
  5. Light switch too high (51")
  6. Toilet flush valve on wrong side

- Re-stripe parking stalls to add access aisle. **Priority 6.**

Budget Pricing		
Description	**Priority**	**Budget Cost**
Concessions Building 1 – Sink, Soap and RR	2, 3	$2,875
Drinking fountain add cane detection and lower	2, 5	$2,500
Restroom modifications	3	$3,125
North field concessions, see note	2	$1,500
North field restrooms, see note	3	$2,875
East field concessions, see note	2	$1000
East field restrooms, see note	3	$4,500
Repaint parking striping	6	$2,500

5. Olson Park

- Door Handle height (54"). **Priority 1.**
- Counter height - 36". **Priority 2.**
- Outlet height (52"). **Priority 2.**
- Restroom building thresholds. **Priority 3.**
- Restroom - soap too high (55"). **Priority 3.**

Budget Pricing		
Description	**Priority**	**Budget Cost**
New hardware at correct height	1	$1,875
Lower counter height	2	$1,250
Lower outlet height	2	$625
Restroom entry thresholds, revise concrete	3	$70 per SY
Lower soap dispensers	3	$375

6. Hydro-Electric Park
   - Switch - too high. **Priority 3.**
   - outlets - too high. **Priority 3.**
   - Re-stripe parking stalls to add access aisle. **Priority 6.**

Budget Pricing		
Description	**Priority**	**Budget Cost**
Lower outlet/switch height	2	$1,250
Repaint parking striping	6	$1,250

N. SUMMARY OF BUDGET COSTS

Overall Budget – Buildings	
Description	**Budget Cost**
Municipal Building	$21,250
Lakeside Municipal Golf Course	$12,250
Fort Dodge Regional Airport	$14,063
Blanden Memorial Art Museum	$14,063
Senior Center	$13,812
Library	$19,375
Fire Station	$3,750
Oleson Park Shelter	$5,938
Bus Shelter	$1,250
Total	**$105,751**

Overall Budget – Parks	
Description	**Budget Cost**
Aquatic Center	$4,375
Snell Crawford Park	$10,000
Loomis Park	$7,812
Harlan Rogers Sports Complex	$20,625
Olson Park	$6,000
Hydro-electric Park	$2,500
Total	$51,312
Overall Total	**$157,063**

Appendix A: ADA Deficiencies

I. Appendix A: Self-Evaluation – Examples of Commonly Identified Deficiencies and Obstructions

Figure A.1 – Commonly Identified Deficiencies

Vertical Discontinuity

Horizontal Discontinuity

Cross Slope

Cracking

Ponding

Vegetation

Spalling

Vertical Slope

Figure A.2 – Sidewalk Obstruction Examples

Fire Hydrant

Lighting Pole

Traffic Signal Handhole

Traffic Signal Pole

Utility Pole

Water Gate Valve

Appendix B: ADA Self-Evaluation

I. Appendix B: City of Fort Dodge, IA Self-Evaluation

A. Review of Programs

The City of Fort Dodge inventoried pedestrian ramps within the public rights-of-way, sidewalks and trails within public parks, and public parking lots beginning in May 2020 and ending in July 2020. The following provides the results of that inventory:

1. Pedestrian Ramps

The City of Fort Dodge has 2621 locations where pedestrian ramps exist in the public rights-of-way or municipally owned parking lots. This self-evaluation identified an additional 1191 locations where pedestrian ramps should exist within its public rights-of-way, but currently do not. Existing locations were inventoried for ADA accessibility based on (1) whether a pedestrian ramp was present and (2) if accessibility criteria outlined in **Part 1 Sec. II** were met. 1364 (52%) of the locations were reported to be mostly accessible. 1257 (48%) were reported to be non-compliant.

2. Sidewalks/Trails

The sidewalks and trails within the City of Fort Dodge's public parks were inventoried and evaluated to determine existing accessibility and to identify existing obstructions based on accessibility criteria outlined in **Part 1**. Of the 4.4 miles of sidewalk/trail evaluated, 0.5 miles (11%) had a condition rating of 2 meaning they were mostly inaccessible and require further evaluation and remedial action.

3. Parking Lots

The City of Fort Dodge has 9 municipally owned public parking lots. Parking lots were inventoried and evaluated to determine existing accessibility and to identify existing obstructions based on accessibility criteria outlined in **Part 1.** Of the 9 parking lots assessed, 3 require remediation.

The following figures and tables report the status of accessible and inaccessible pedestrian infrastructure in the public right-of-way as well as public parking lots:

- **Figures B-1** through **B-49** illustrate all infrastructure inventoried
- **Table B-1** provides an implementation plan for priority ranked improvements**.** The timeline for replacement of these sidewalks is dependent on priority ranking, correlation to planned projects, reasonable accommodation requests, and available funding.
- **Figure B-50** illustrates parking lot locations
- **Table B-2** provides a breakdown of the public parking lot evaluation.

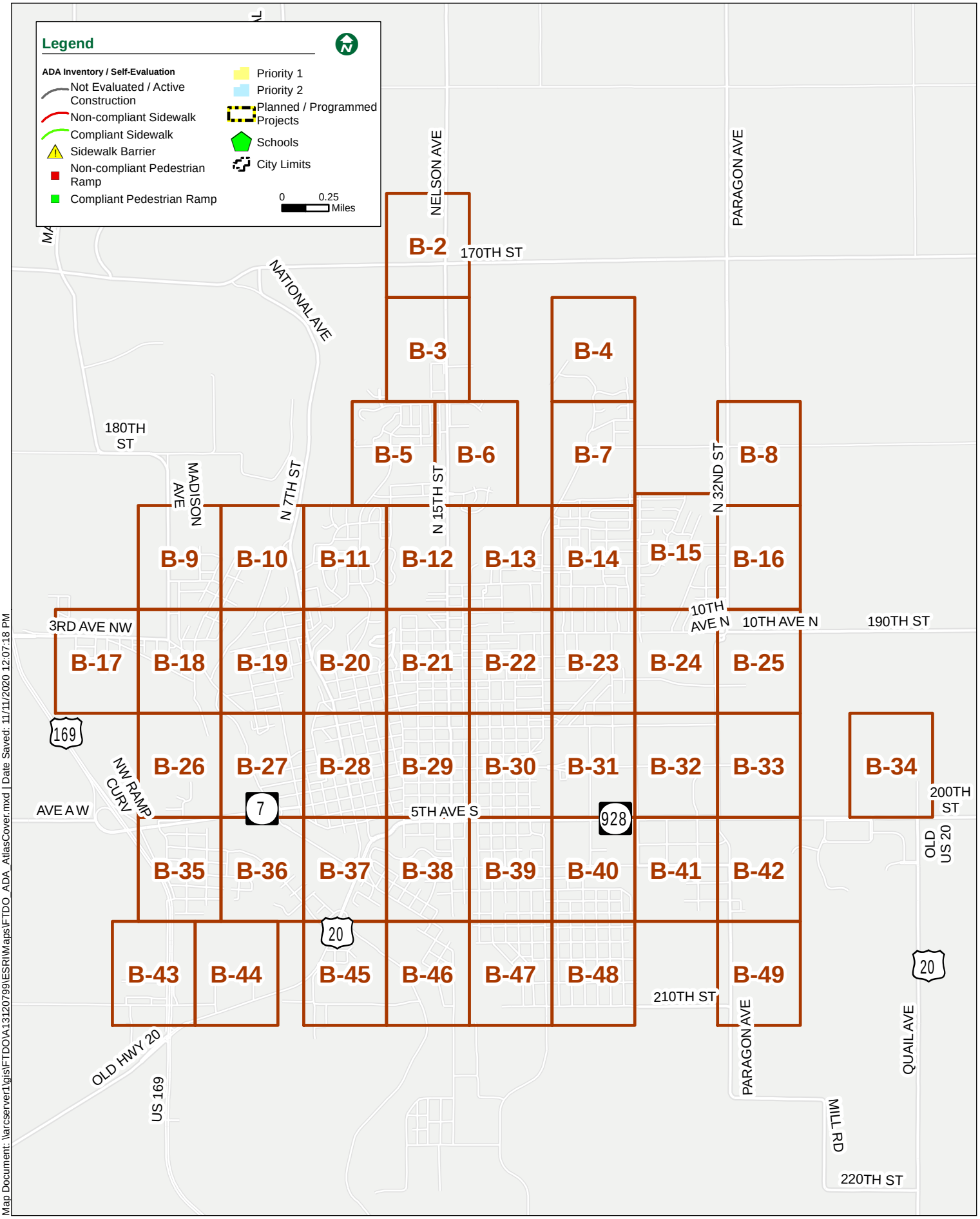

Map Document: \\arcserver1\gis\FTDO\A13120799\ESRI\Maps\FTDO_ADA_AtlasCover.mxd | Date Saved: 11/11/2020 12:07:18 PM

Map Document: \\arcserver1\gis\FTDO\A13120799\ESRI\Maps\FTDO_ADA_Atlas.mxd | Date Saved: 11/11/2020 8:32:34 PM

Map Document: \\arcserver1\gis\FTDO\A13120799\ESRI\Maps\FTDO_ADA_Atlas.mxd | Date Saved: 11/11/2020 8:32:34 PM

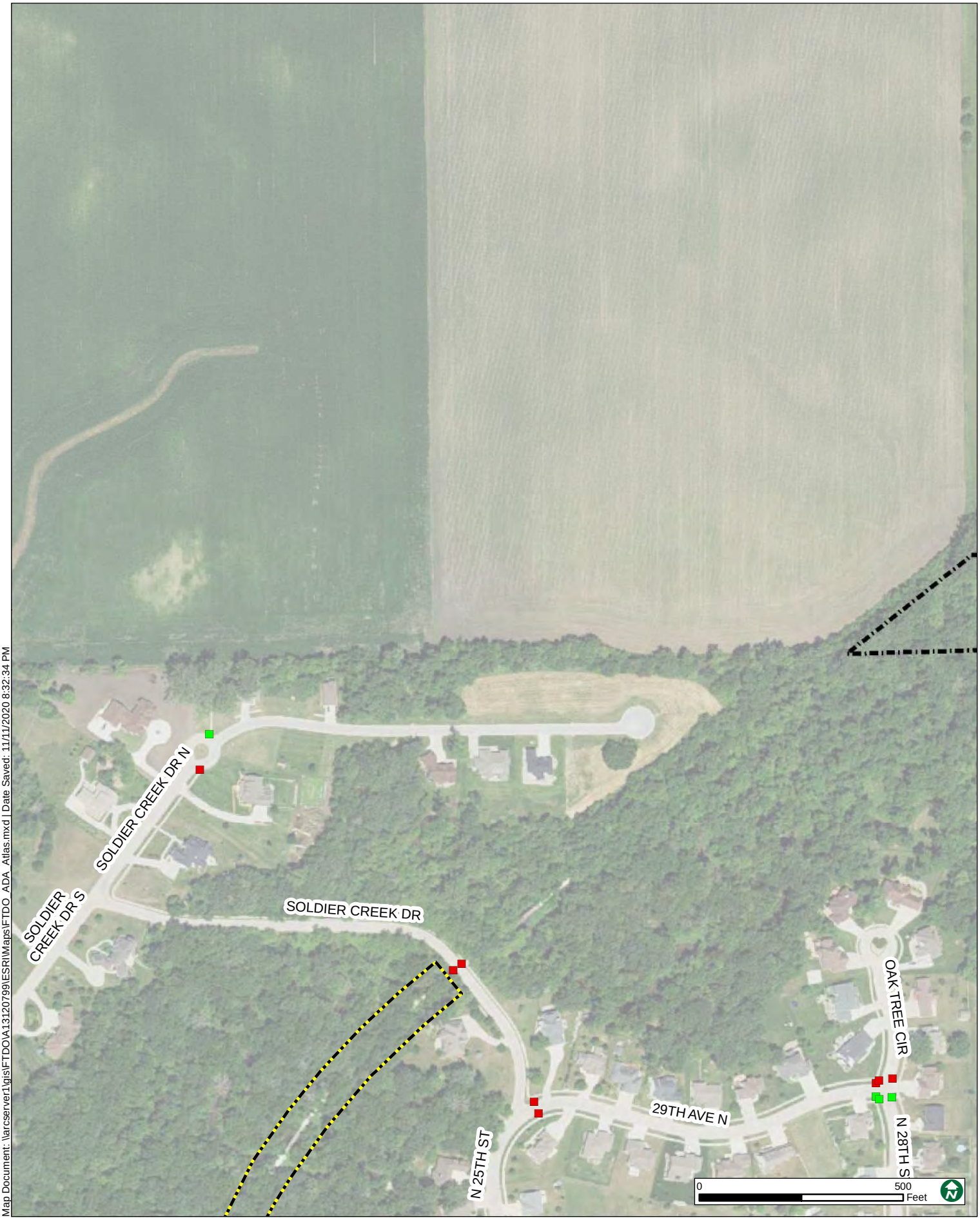
SOLDIER CREEK DR N
SOLDIER CREEK DR S
SOLDIER CREEK DR
OAK TREE CIR
29TH AVE N
N 25TH ST
N 28TH S
0
500
Feet

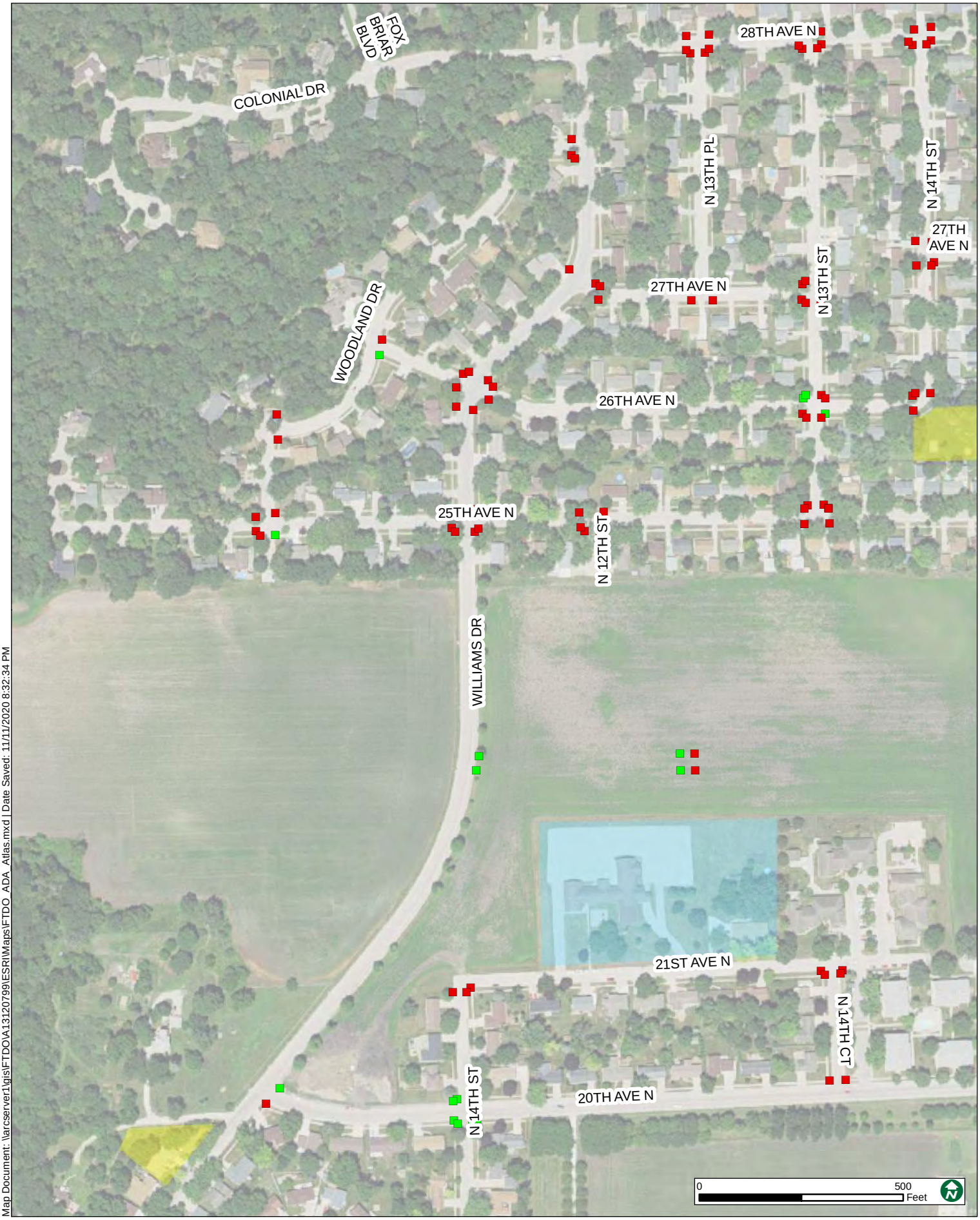

Map Document: \\arcserver1\gis\FTDO\A13120799\ESRI\Maps\FTDO_ADA_Atlas.mxd | Date Saved: 11/11/2020 8:32:34 PM

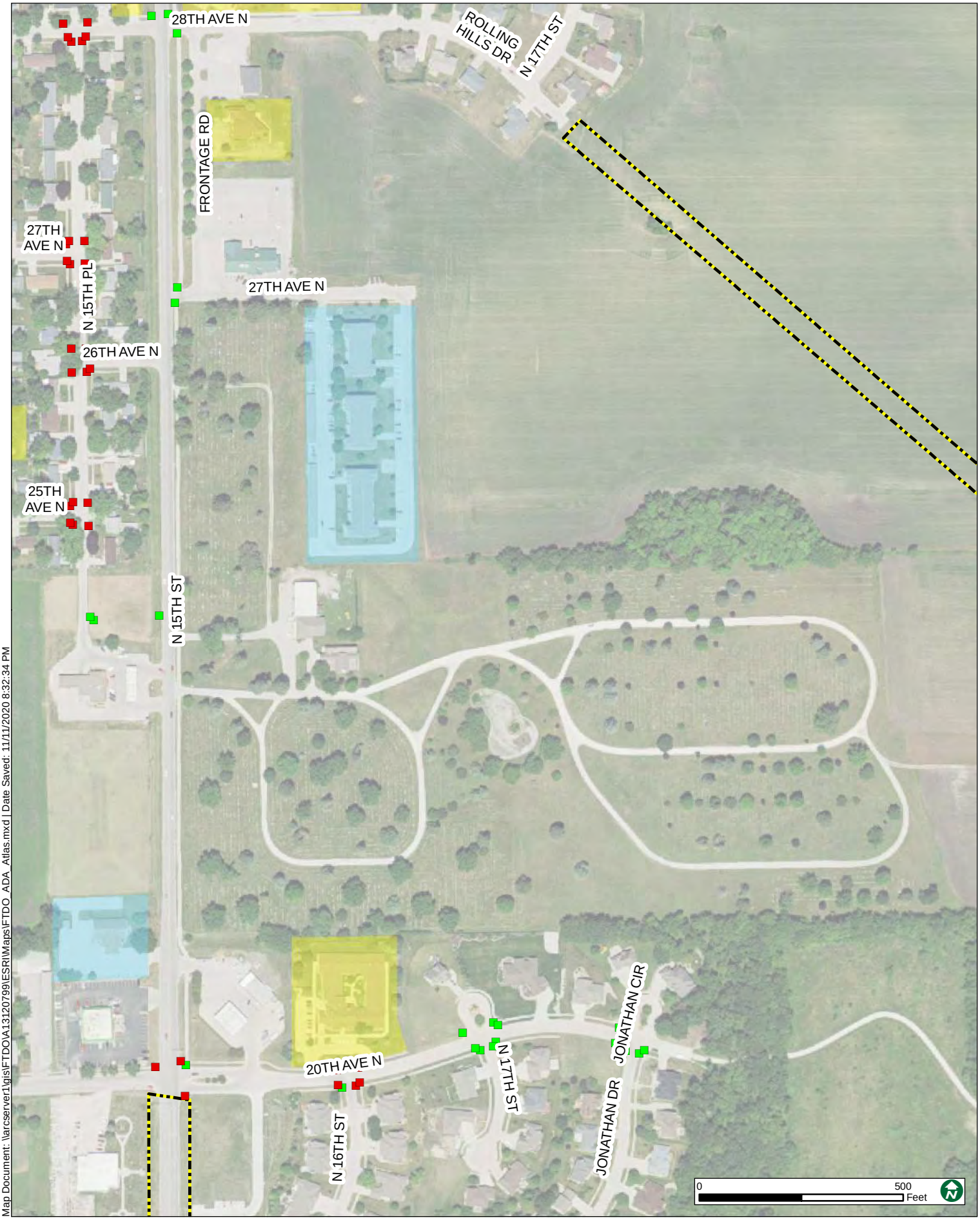

Map Document: \\arcserver1\gis\FTDO\A13120799\ESRI\Maps\FTDO_ADA_Atlas.mxd | Date Saved: 11/11/2020 8:32:34 PM

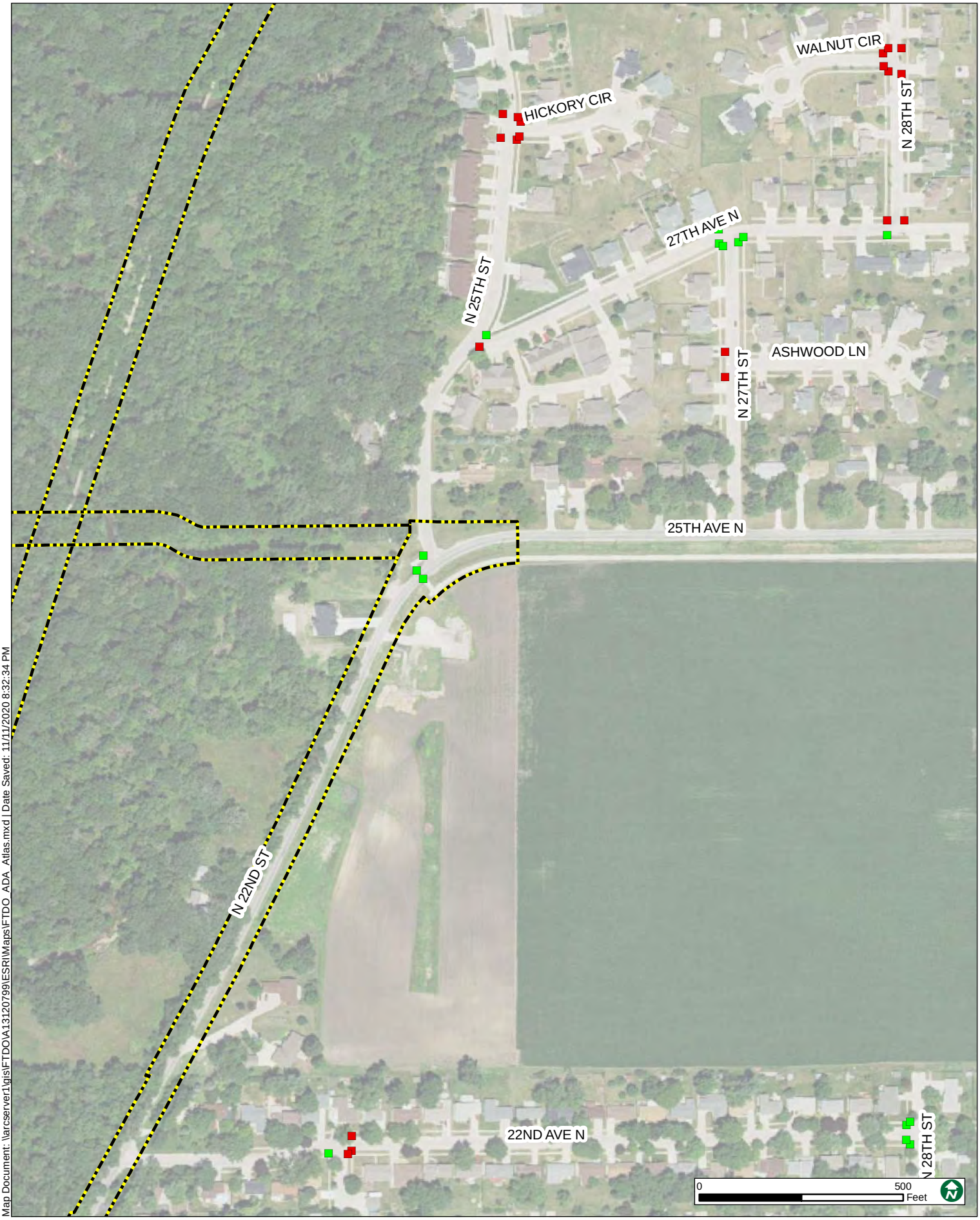

Map Document: \\arcserver1\gis\FTDO\A13120799\ESRI\Maps\FTDO_ADA_Atlas.mxd | Date Saved: 11/11/2020 8:32:34 PM

Map Document: \\arcserver1\gis\FTDO\A13120799\ESRI\Maps\FTDO_ADA_Atlas.mxd | Date Saved: 11/11/2020 8:32:34 PM

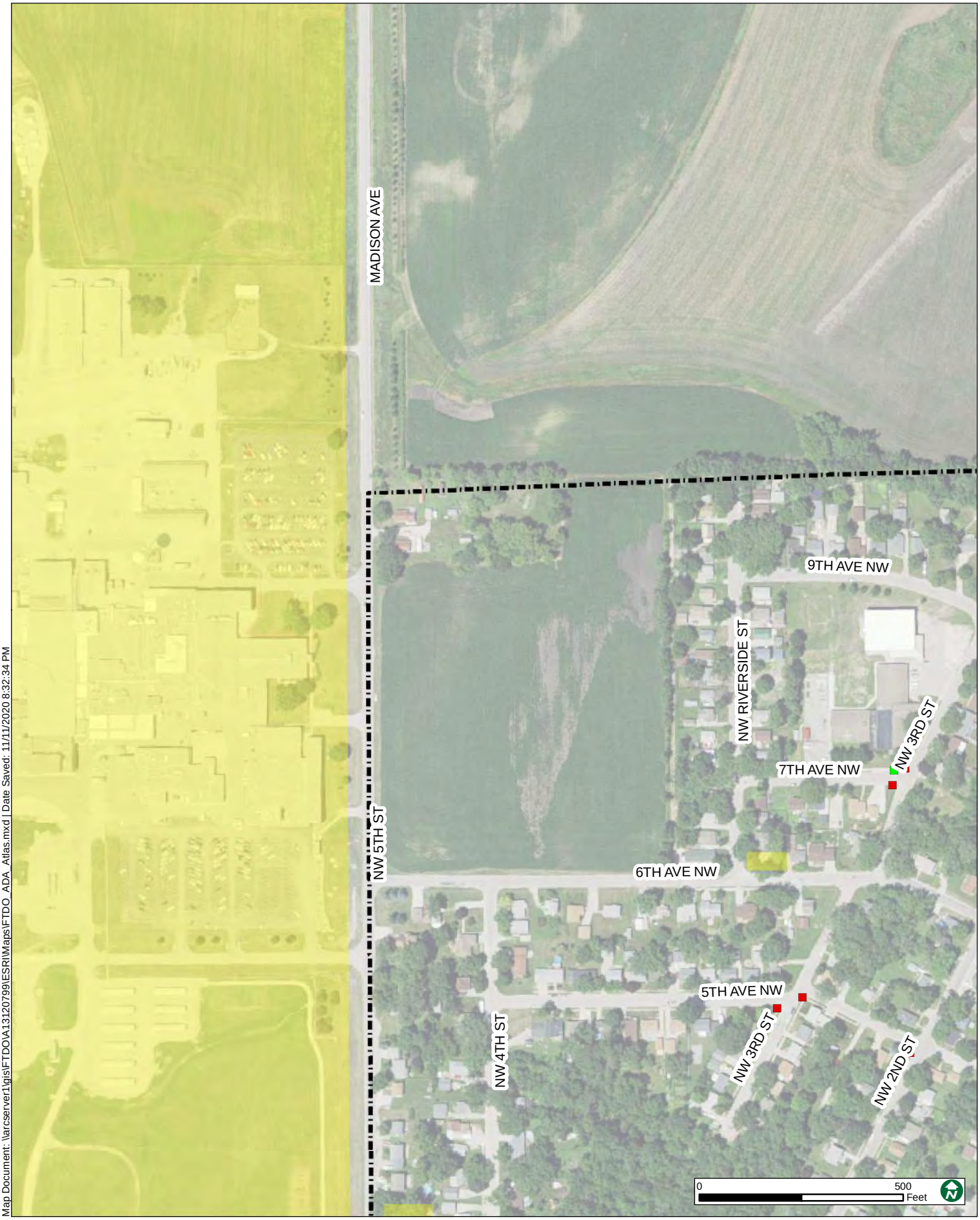

Map Document: \\arcserver1\gis\FTDO\A13120799\ESRI\Maps\FTDO_ADA_Atlas.mxd | Date Saved: 11/11/2020 8:32:34 PM

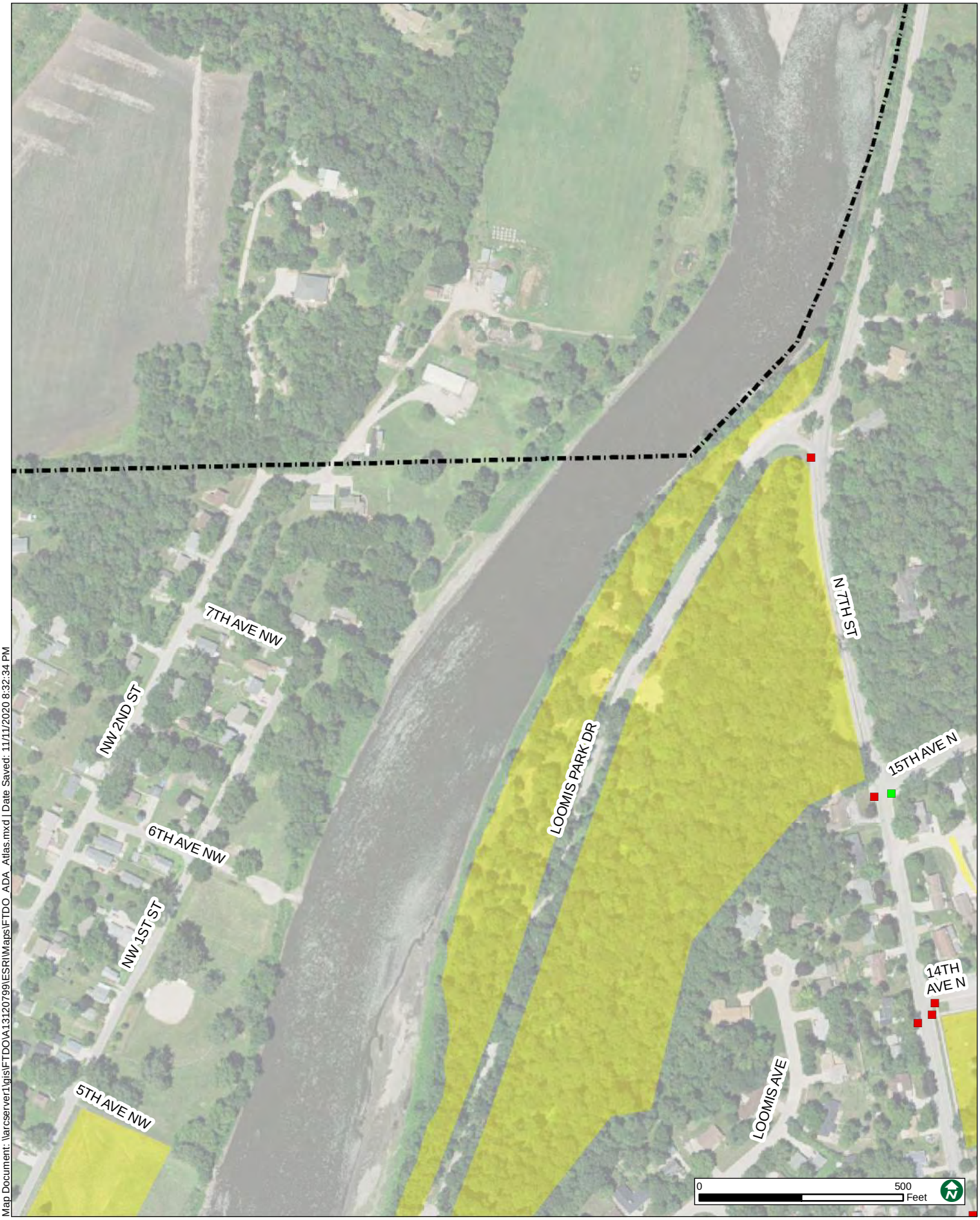

Map Document: \\arcserver1\gis\FTDO\A13120799\ESRI\Maps\FTDO_ADA_Atlas.mxd | Date Saved: 11/11/2020 8:32:34 PM

Map Document: \\arcserver1\gis\FTDO\A13120799\ESRI\Maps\FTDO_ADA_Atlas.mxd | Date Saved: 11/11/2020 8:32:34 PM

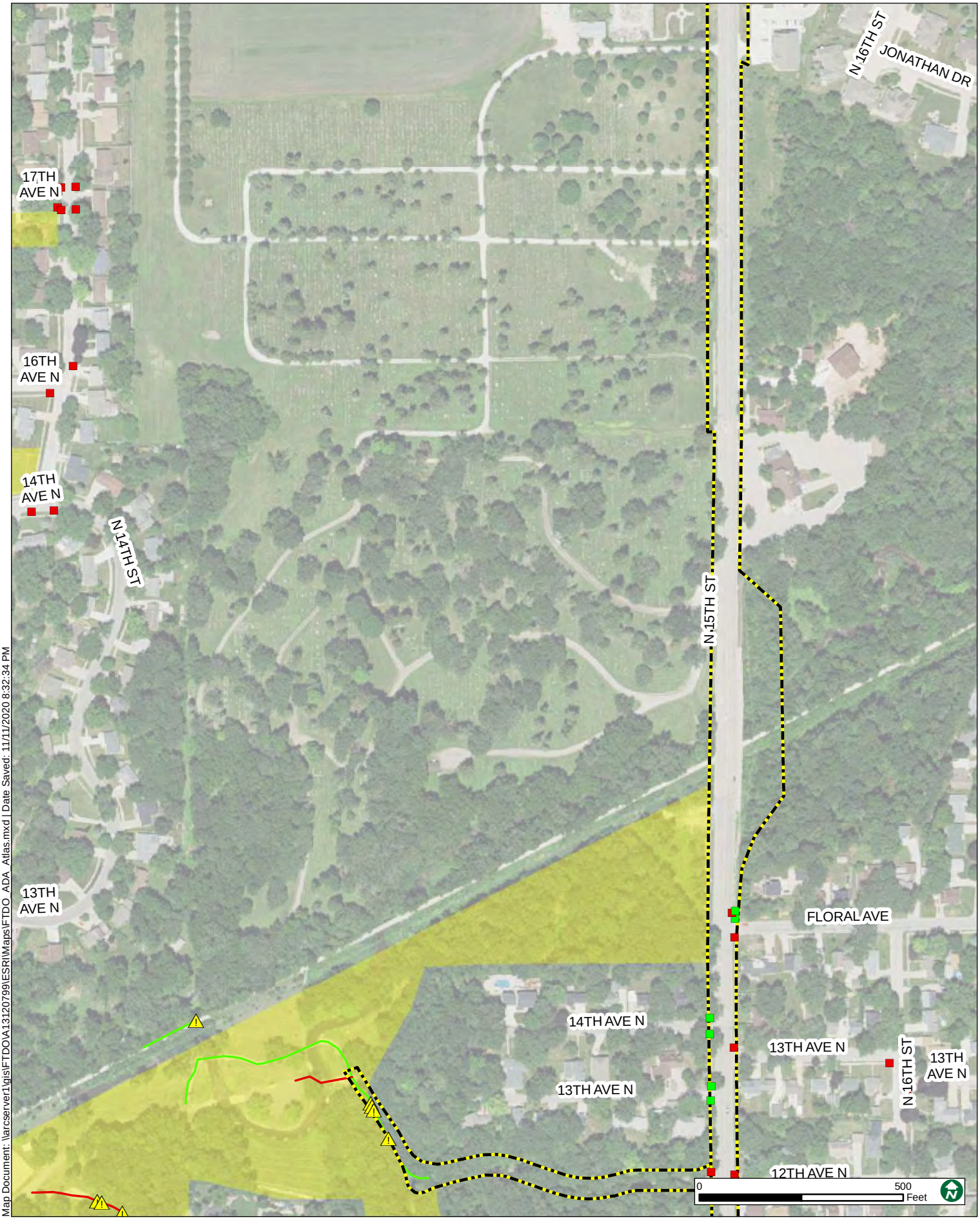

Map Document: \\arcserver1\gis\FTDO\A13120799\ESRI\Maps\FTDO_ADA_Atlas.mxd | Date Saved: 11/11/2020 8:32:34 PM

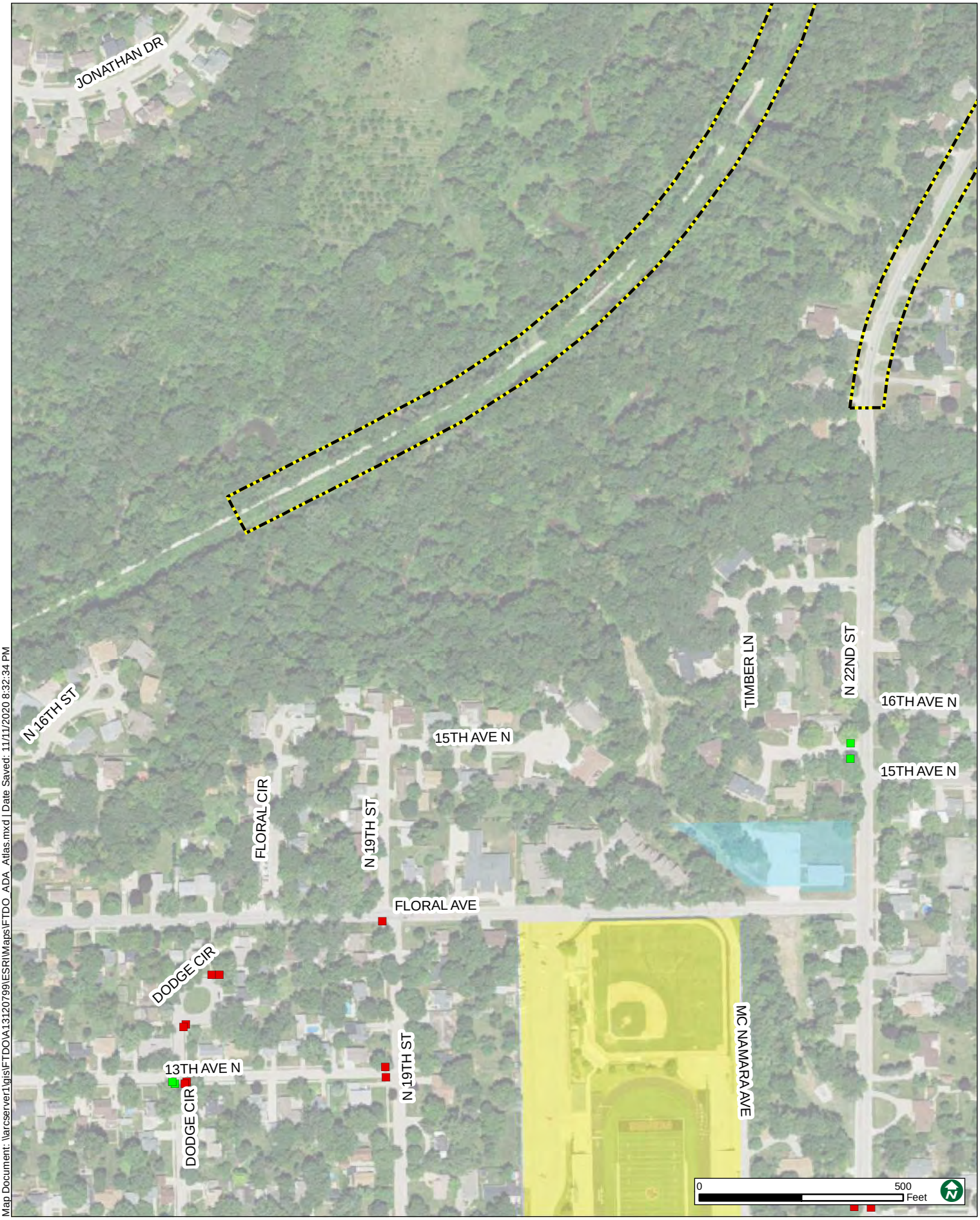

Map Document: \\arcserver1\gis\FTDO\A13120799\ESRI\Maps\FTDO_ADA_Atlas.mxd | Date Saved: 11/11/2020 8:32:34 PM

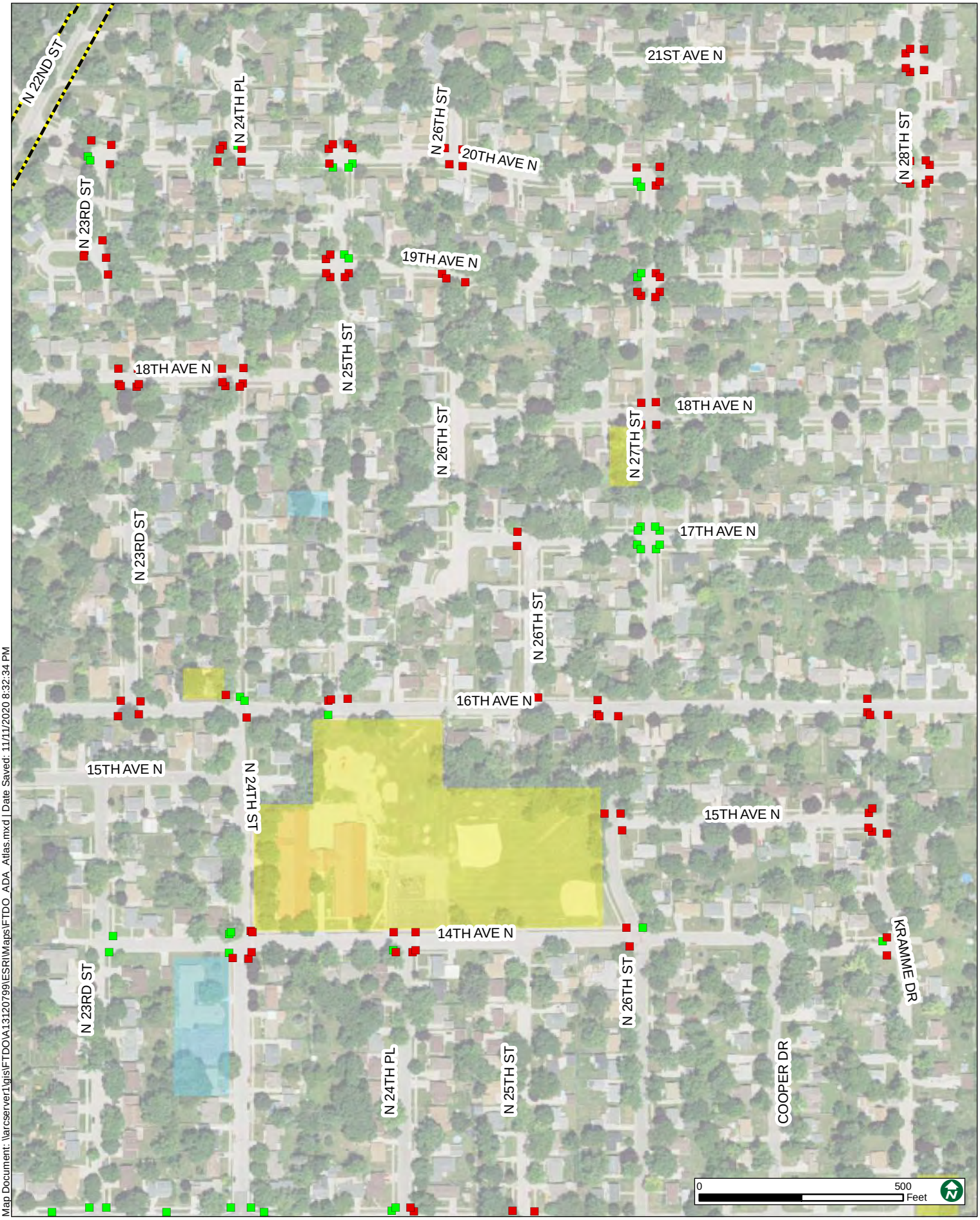

Map Document: \\arcserver1\gis\FTDO\A13120799\ESRI\Maps\FTDO_ADA_Atlas.mxd | Date Saved: 11/11/2020 8:32:34 PM

Map Document: \\arcserver1\gis\FTDO\A13120799\ESRI\Maps\FTDO_ADA_Atlas.mxd | Date Saved: 11/11/2020 8:32:34 PM

Map Document: \\arcserver1\gis\FTDO\A1312079\ESRI\Maps\FTDO_ADA_Atlas.mxd | Date Saved: 11/11/2020 8:32:34 PM

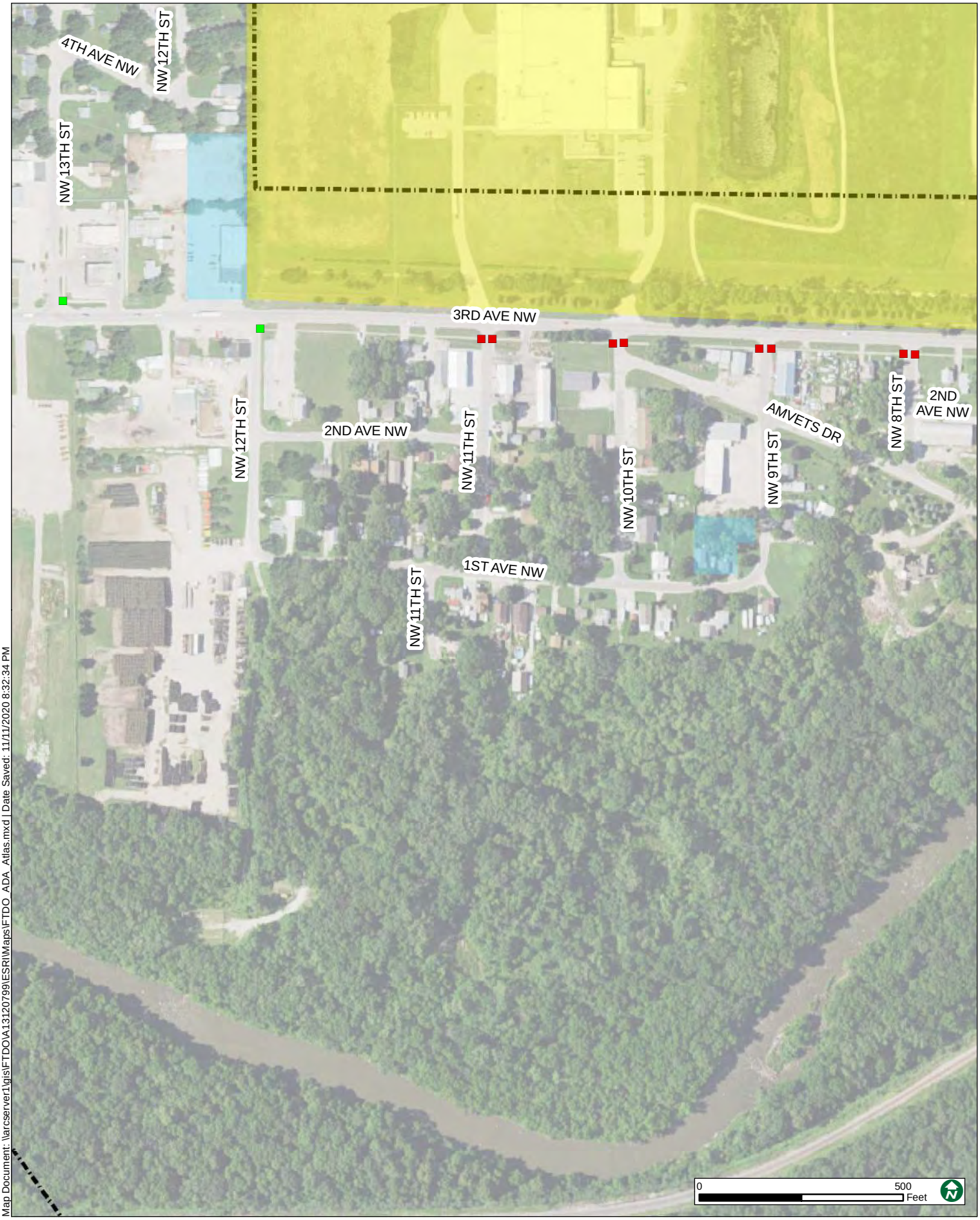

Map Document: \\arcserver1\gis\FTDO\A13120799\ESRI\Maps\FTDO_ADA_Atlas.mxd | Date Saved: 11/11/2020 8:32:34 PM

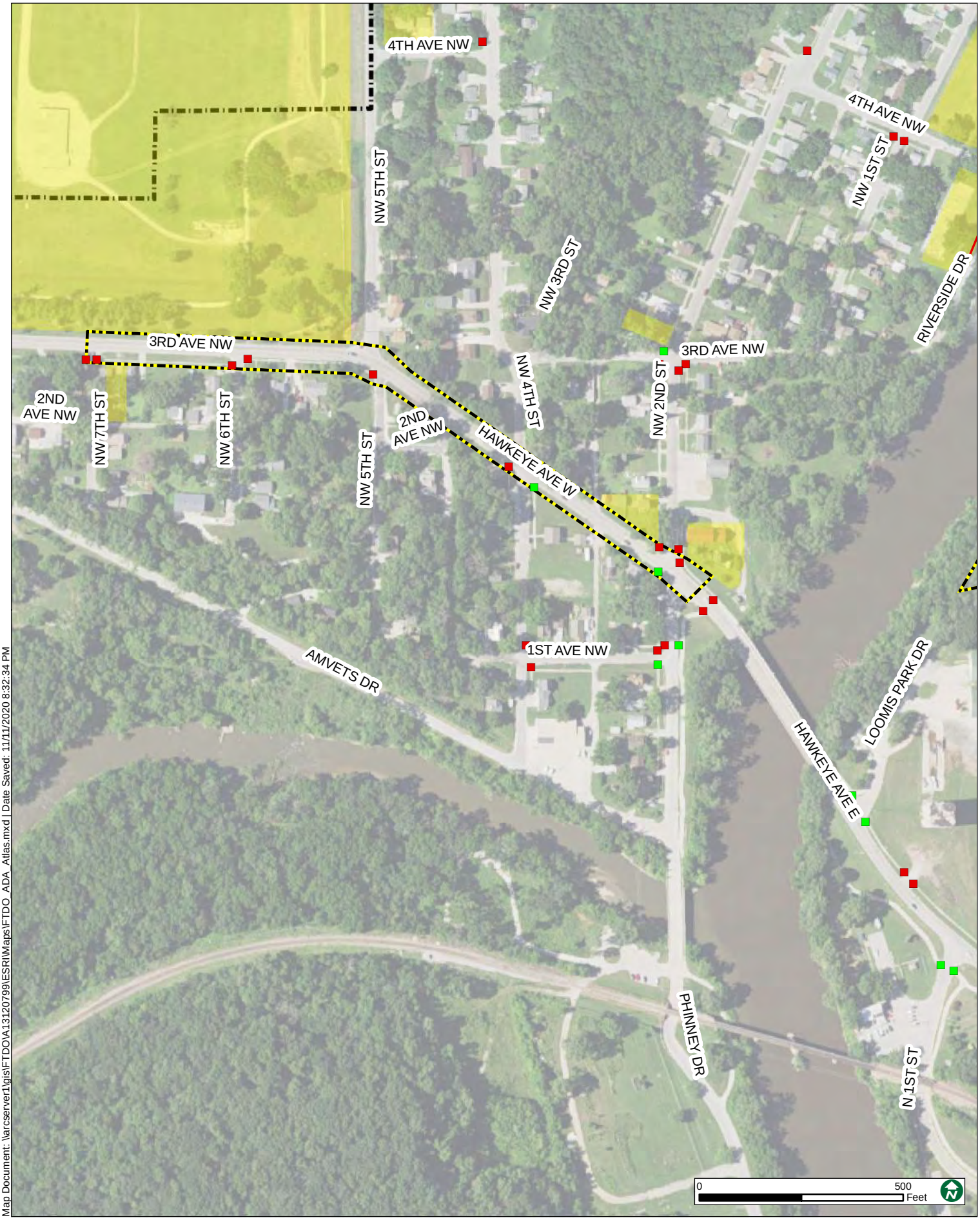

Map Document: \\arcserver1\gis\FTDO\A13120799\ESRI\Maps\FTDO_ADA_Atlas.mxd | Date Saved: 11/11/2020 8:32:34 PM

Map Document: \\arcserver1\gis\FTDO\A13120799\ESRI\Maps\FTDO_ADA_Atlas.mxd | Date Saved: 11/11/2020 8:32:34 PM

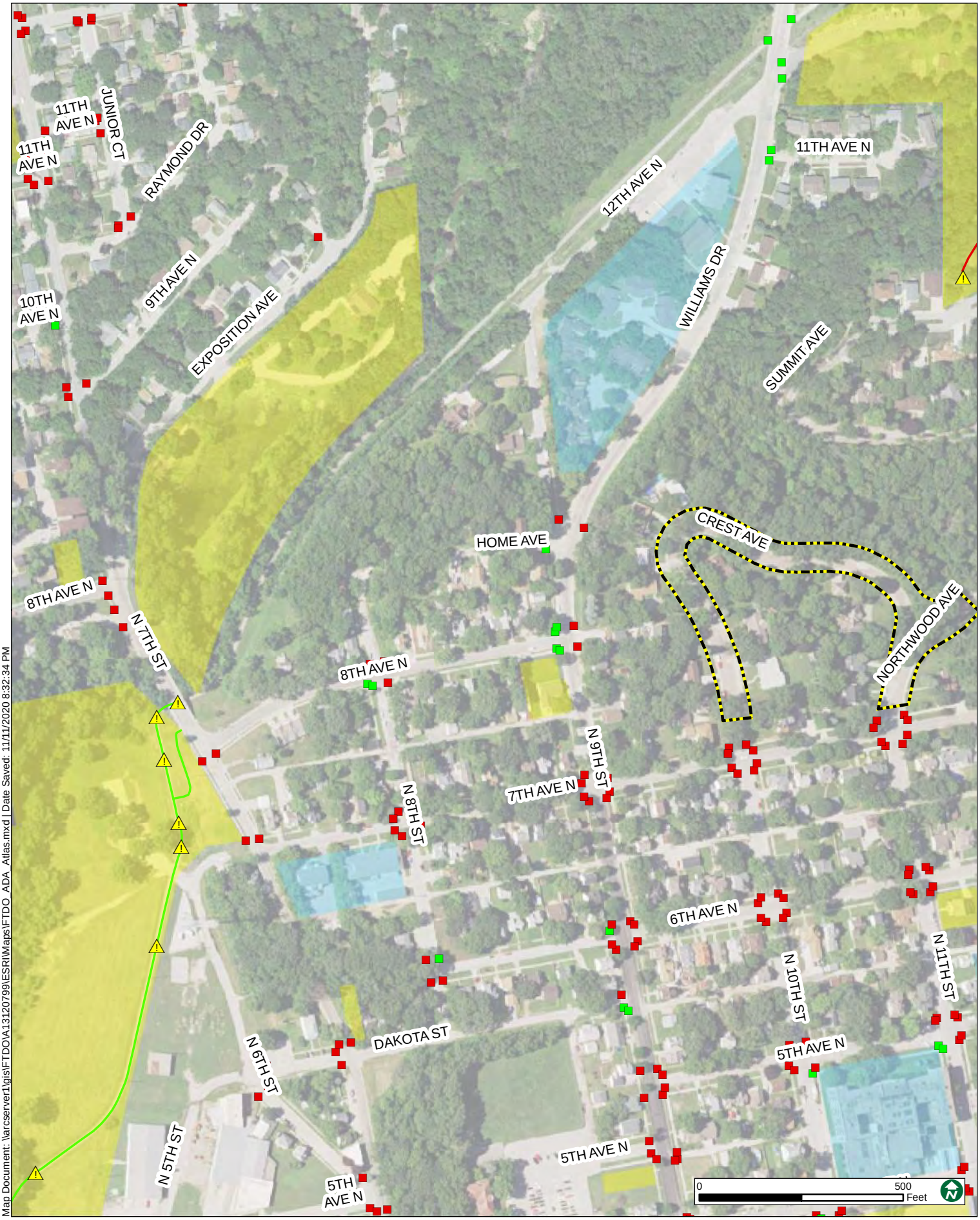

Map Document: \\arcserver1\gis\FTDO\A13120799\ESRI\Maps\FTDO_ADA_Atlas.mxd | Date Saved: 11/11/2020 8:32:34 PM

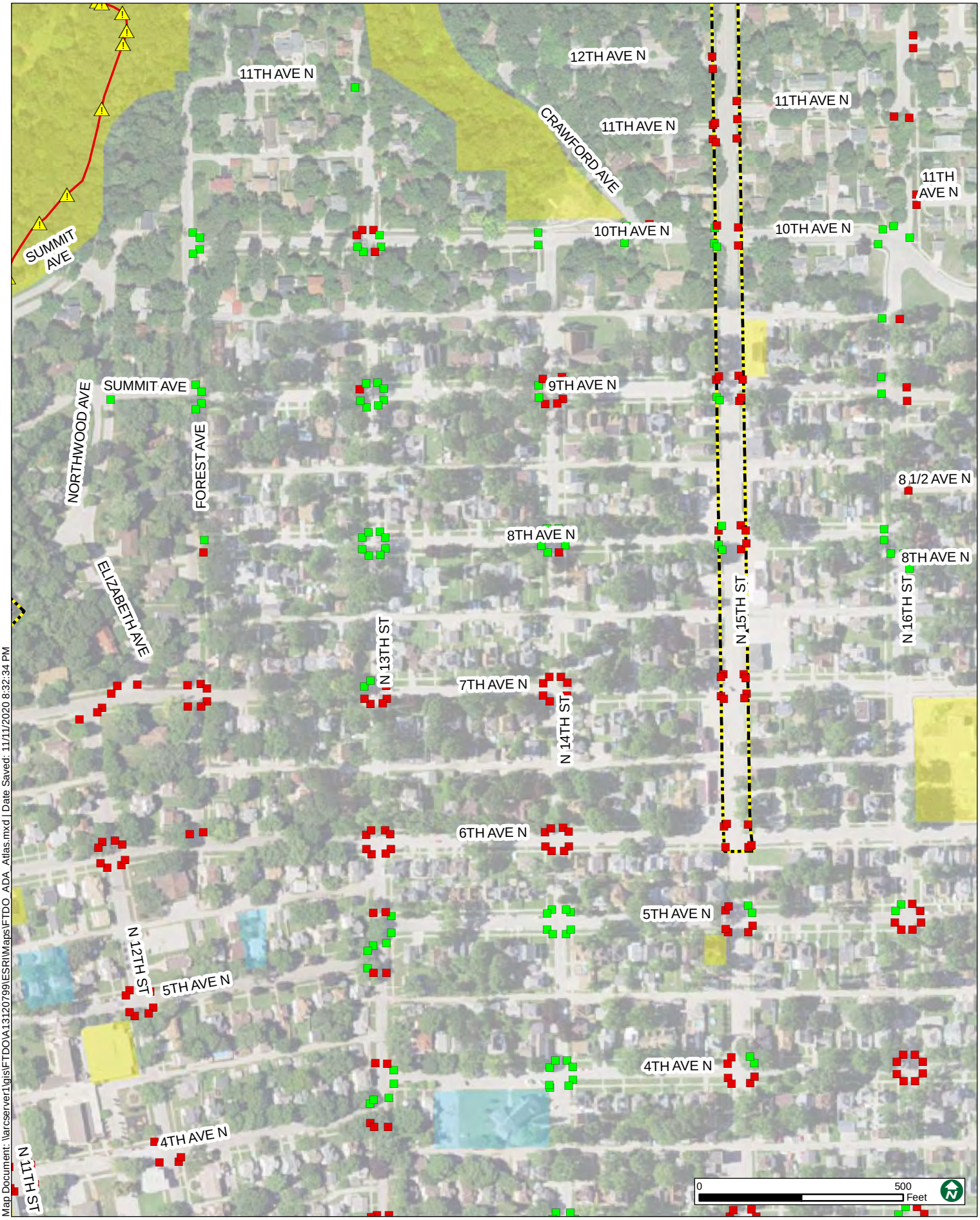

Map Document: \\arcserver1\gis\FTDO\A1312079\ESRI\Maps\FTDO_ADA_Atlas.mxd | Date Saved: 11/11/2020 8:32:34 PM

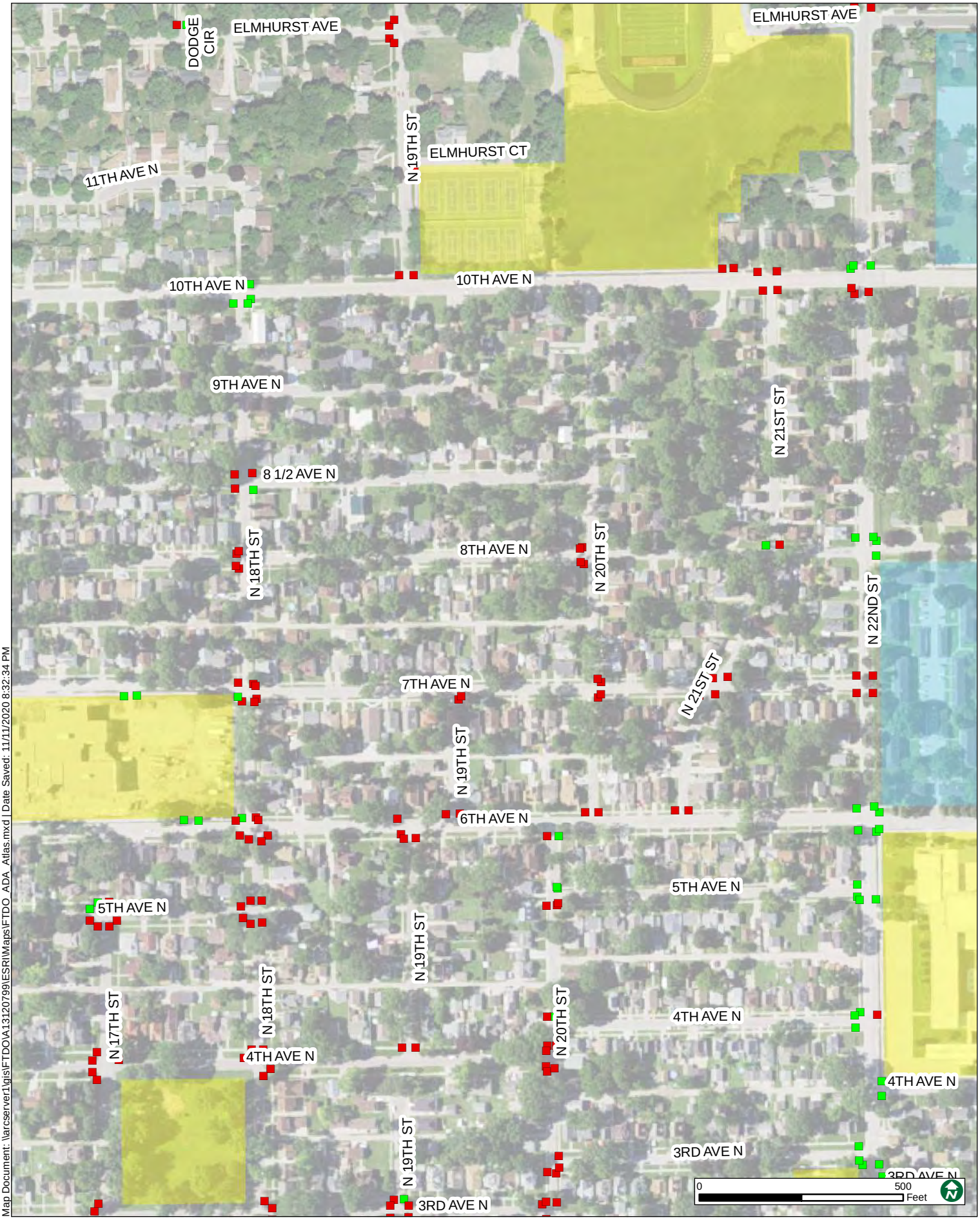

Map Document: \\arcserver1\gis\FTDO\A13120799\ESRI\Maps\FTDO_ADA_Atlas.mxd | Date Saved: 11/11/2020 8:32:34 PM

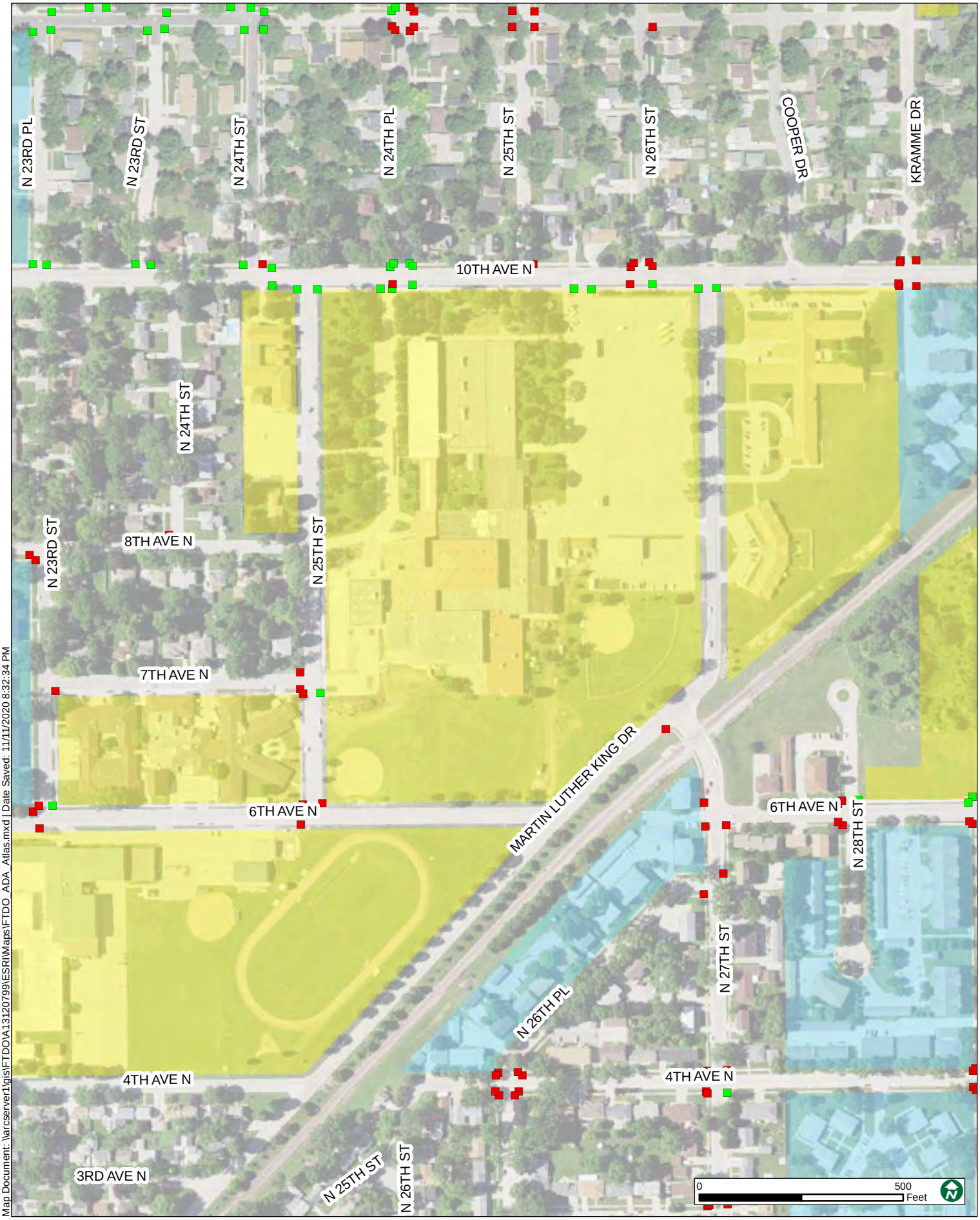

Map Document: \\arcserver1\gis\FTDO\A13120799\ESRI\Maps\FTDO_ADA_Atlas.mxd | Date Saved: 11/11/2020 8:32:34 PM

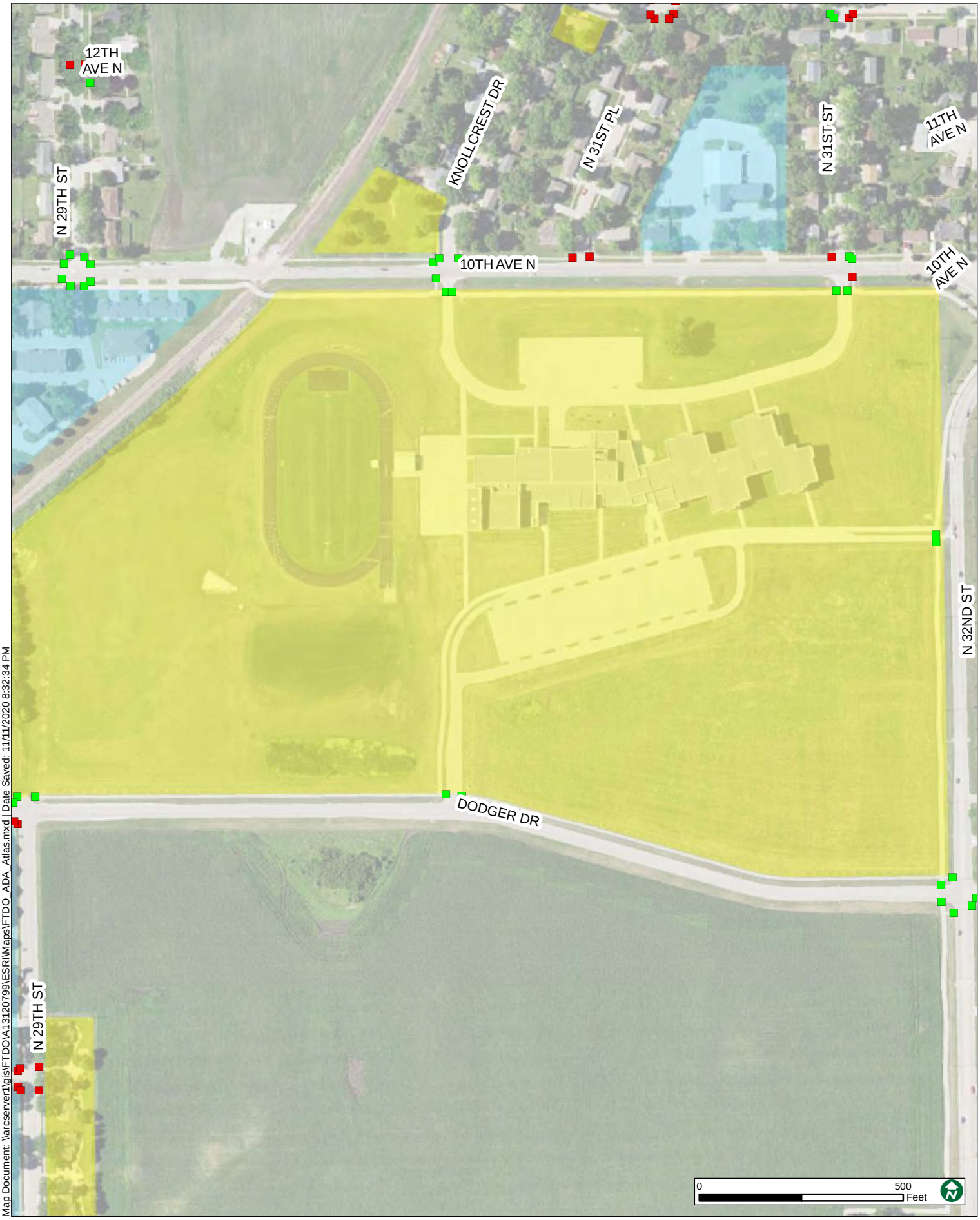

Map Document: \\arcserver1\gis\FTDO\A1312079\ESRI\Maps\FTDO_ADA_Atlas.mxd | Date Saved: 11/11/2020 8:32:34 PM

Map Document: \\arcserver1\gis\FTDO\A13120799\ESRI\Maps\FTDO_ADA_Atlas.mxd | Date Saved: 11/11/2020 8:32:34 PM

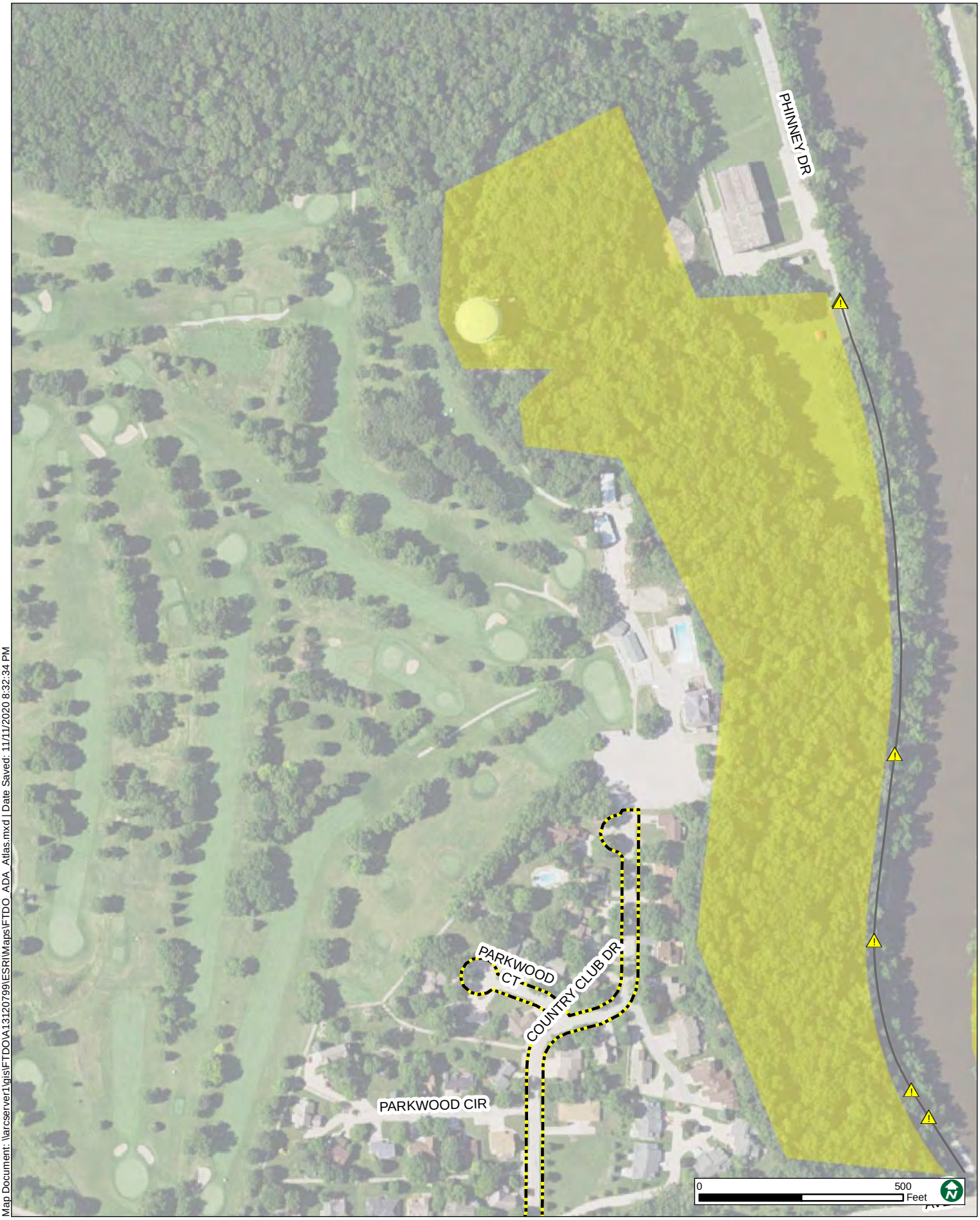

Map Document: \\arcserver1\gis\FTDO\A13120799\ESRI\Maps\FTDO_ADA_Atlas.mxd | Date Saved: 11/11/2020 8:32:34 PM

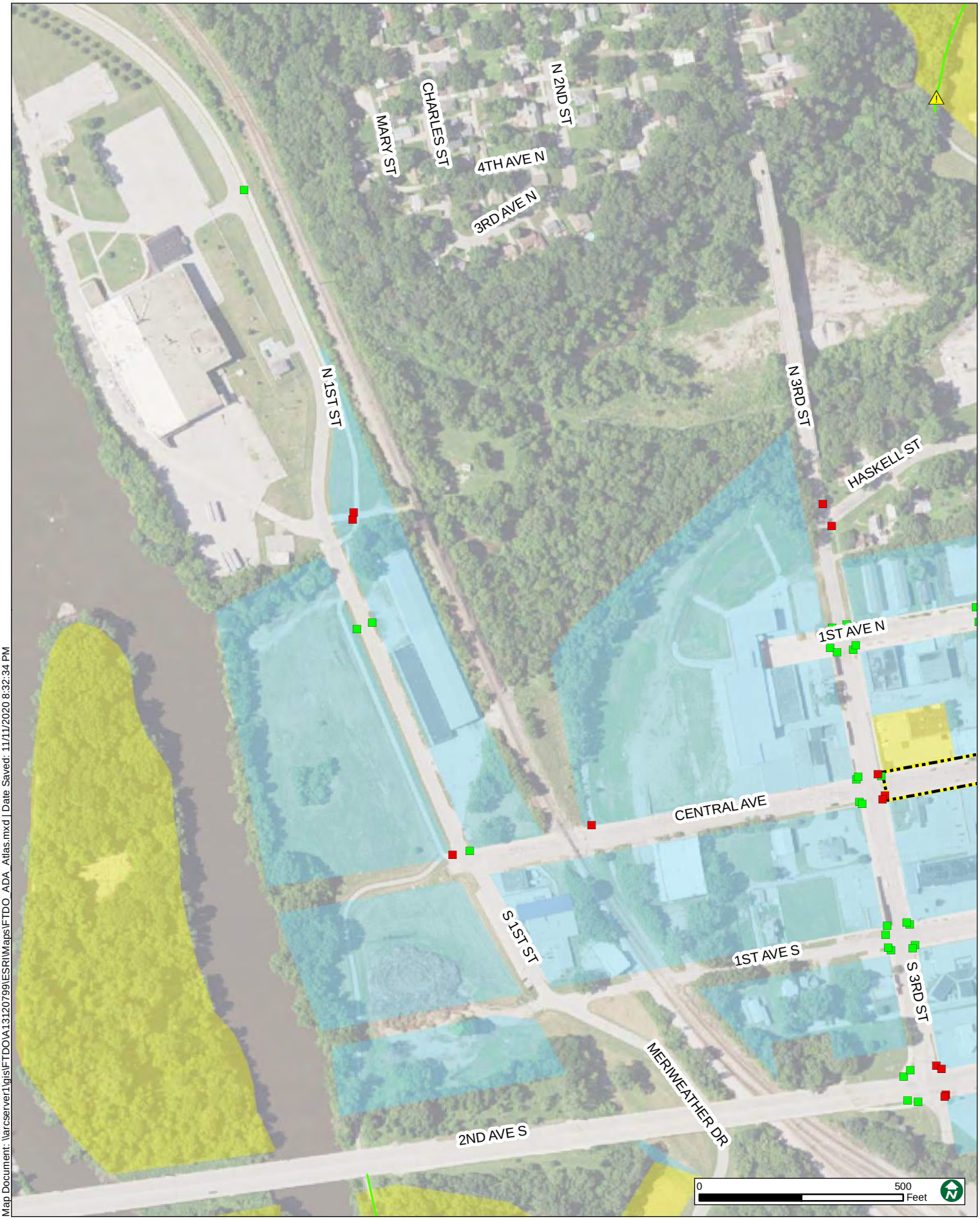

Map Document: \\arcserver1\gis\FTDO\A13120799\ESRI\Maps\FTDO_ADA_Atlas.mxd | Date Saved: 11/11/2020 8:32:34 PM

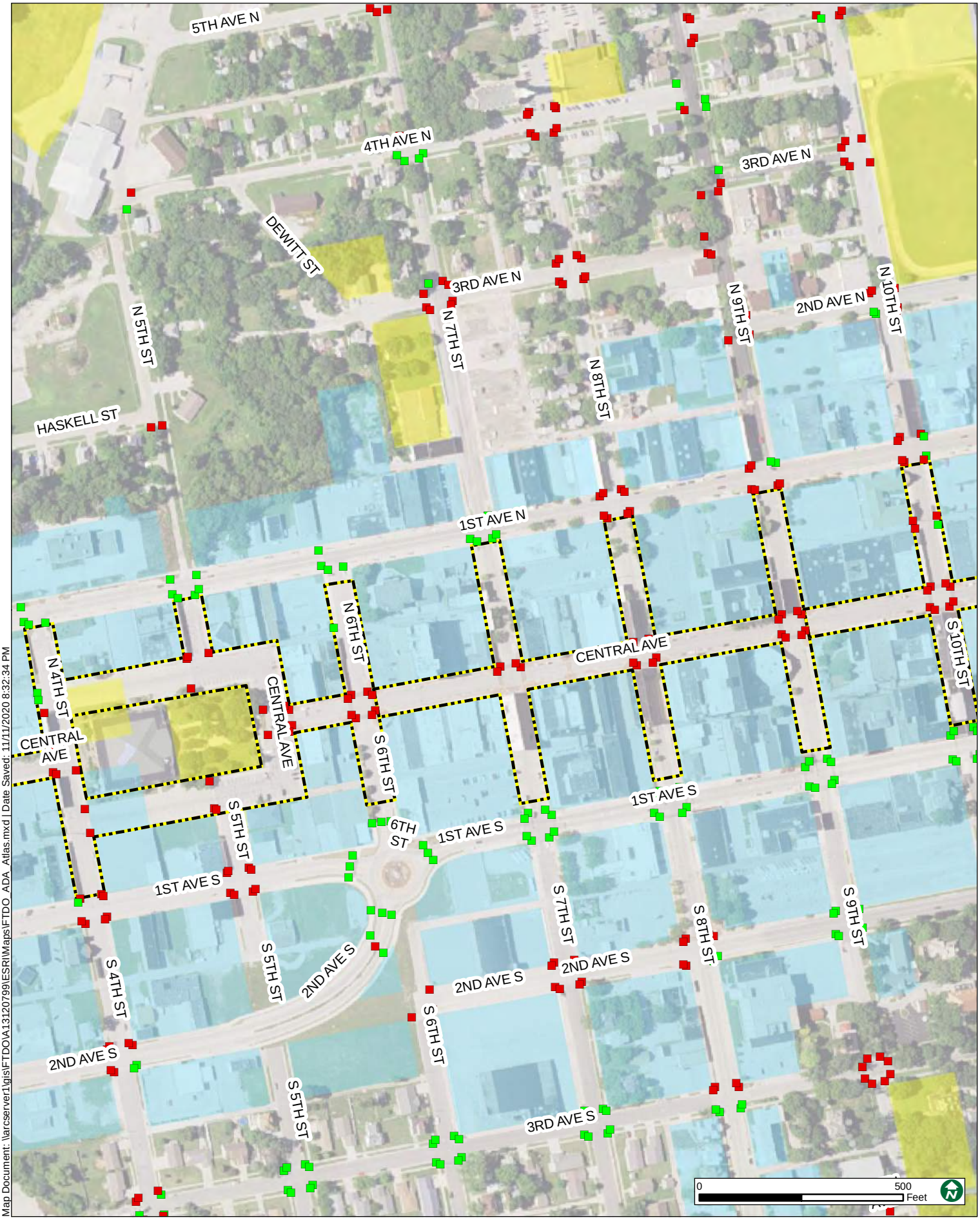

Map Document: \\arcserver1\gis\FTDO\A13120799\ESRI\Maps\FTDO_ADA_Atlas.mxd | Date Saved: 11/11/2020 8:32:34 PM

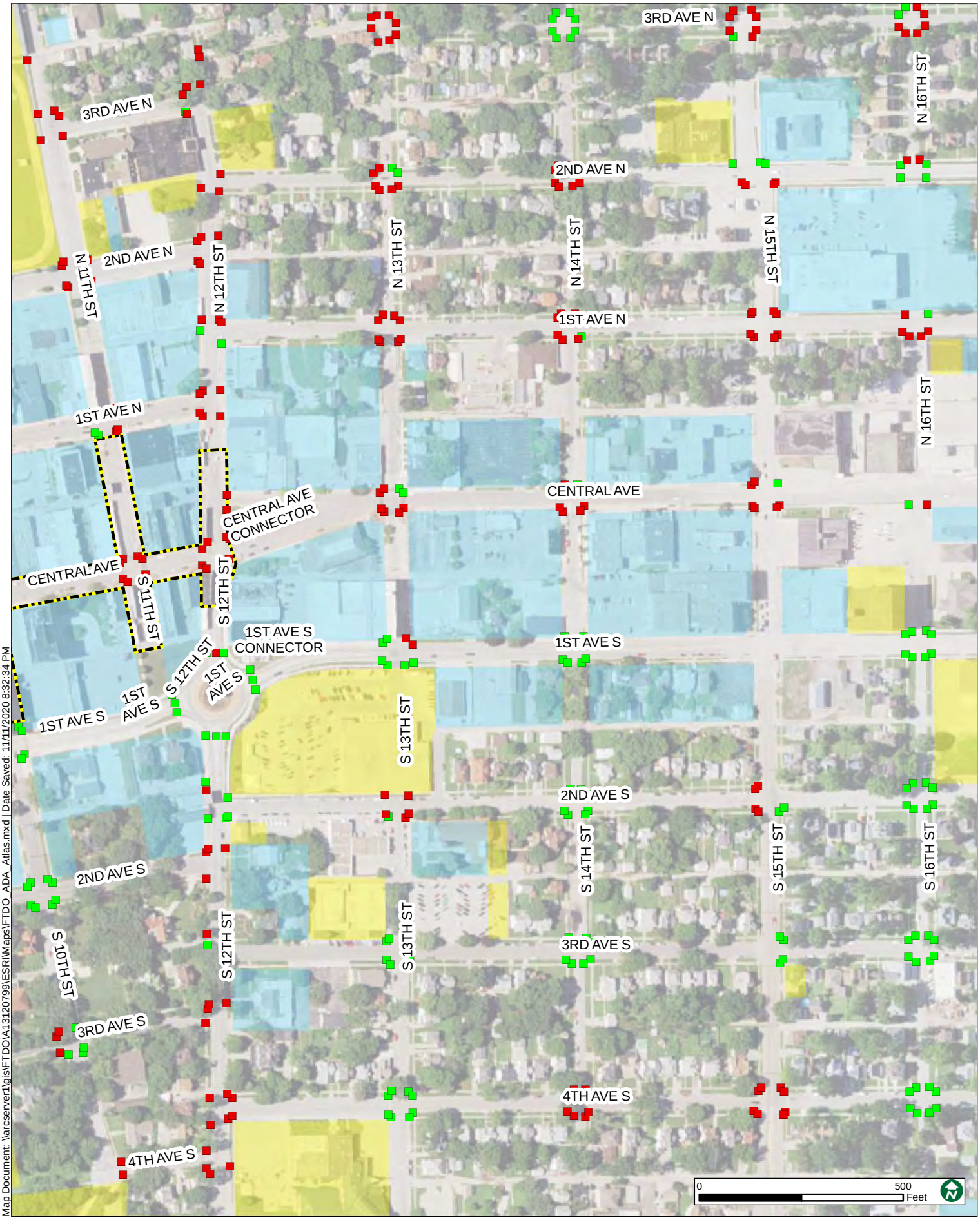
3RD AVE N
2ND AVE N
1ST AVE N
CENTRAL AVE
CENTRAL AVE CONNECTOR
1ST AVE S CONNECTOR
1ST AVE S
2ND AVE S
3RD AVE S
4TH AVE S
N 11TH ST
N 12TH ST
N 13TH ST
N 14TH ST
N 15TH ST
N 16TH ST
S 10TH ST
S 11TH ST
S 12TH ST
S 13TH ST
S 14TH ST
S 15TH ST
S 16TH ST
0
500
Feet

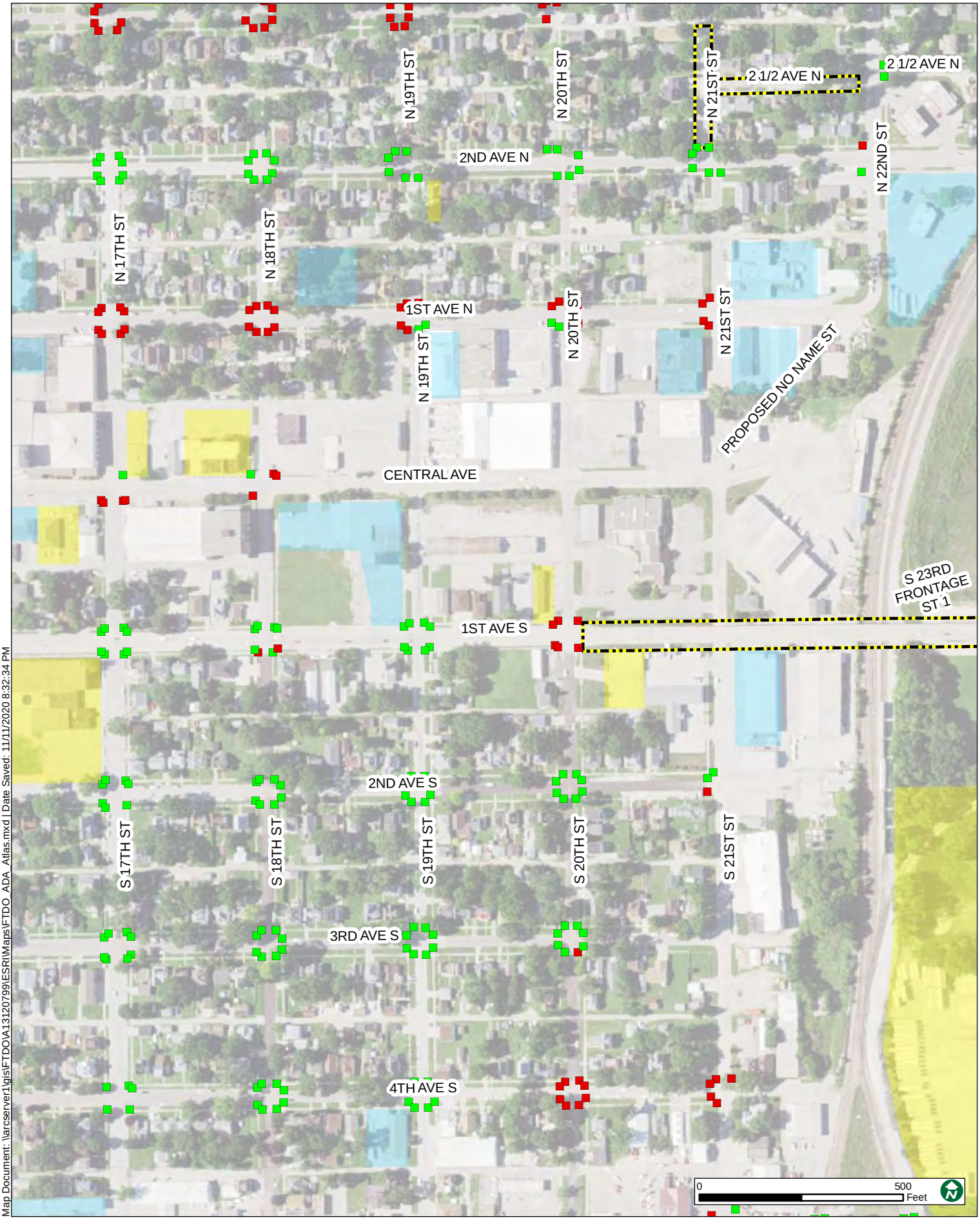

Map Document: \\arcserver1\gis\FTDO\A13120799\ESRI\Maps\FTDO_ADA_Atlas.mxd | Date Saved: 11/11/2020 8:32:34 PM

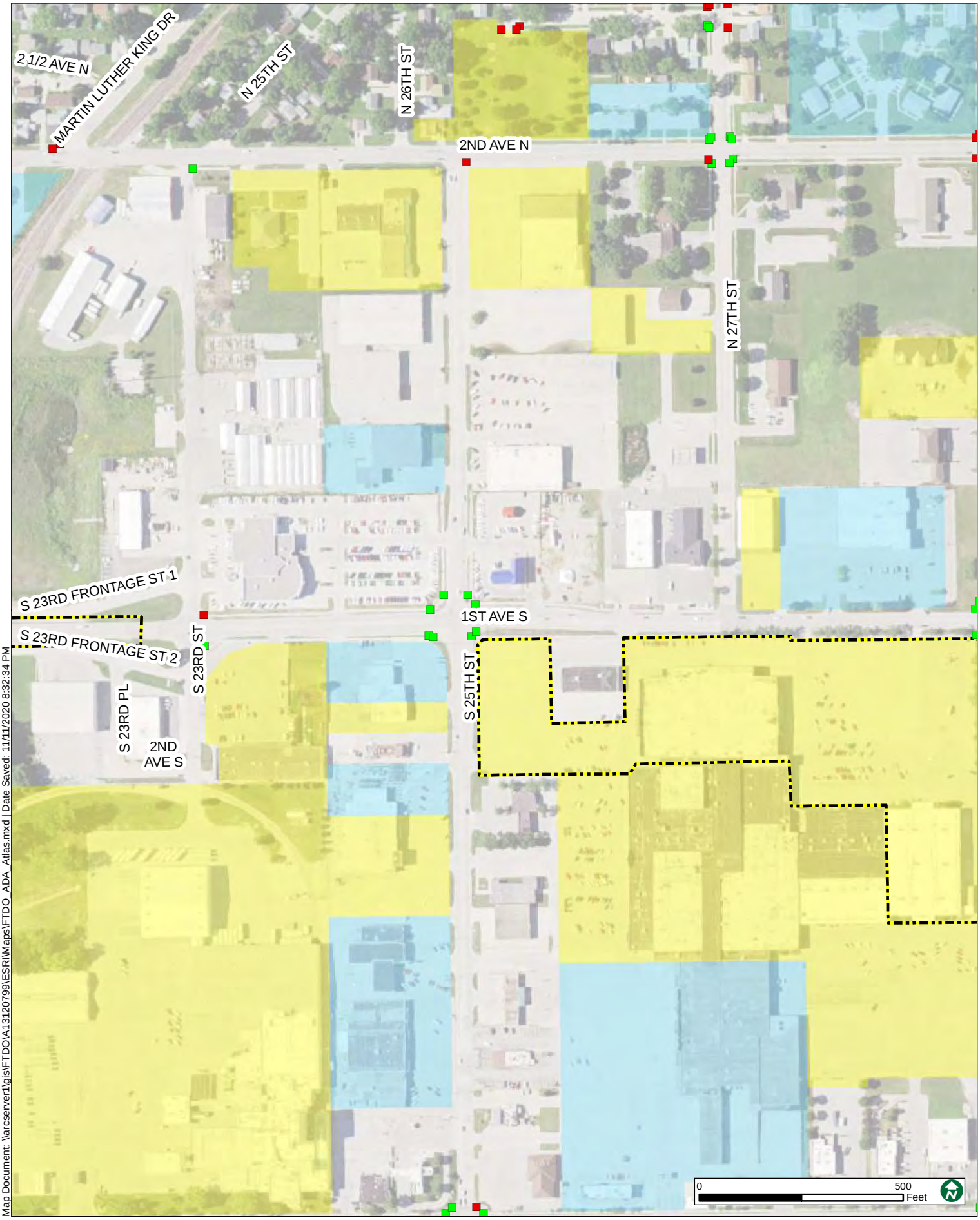

Map Document: \\arcserver1\gis\FTDO\A13120799\ESRI\Maps\FTDO_ADA_Atlas.mxd | Date Saved: 11/11/2020 8:32:34 PM

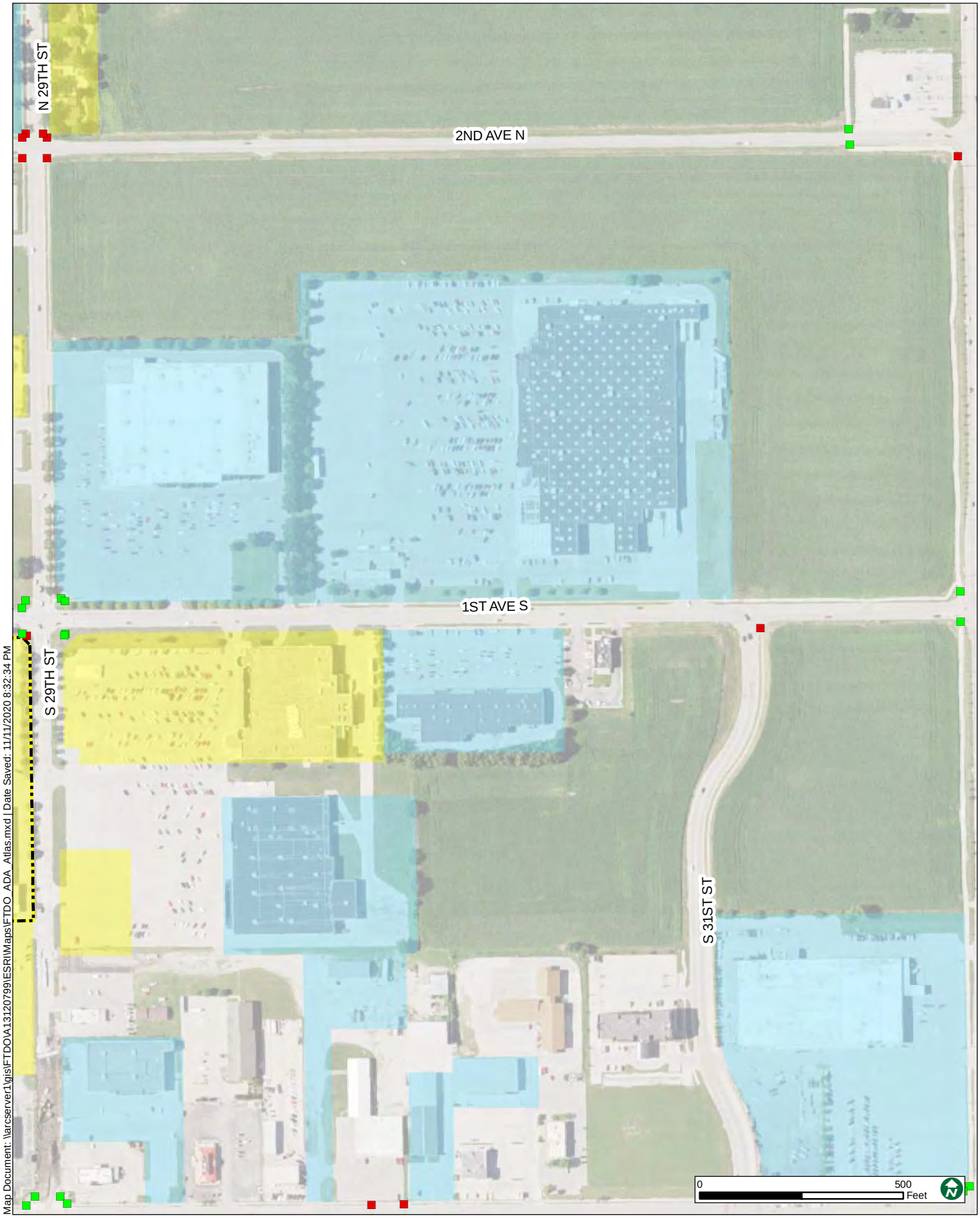

Map Document: \\arcserver1\gis\FTDO\A13120799\ESRI\Maps\FTDO_ADA_Atlas.mxd | Date Saved: 11/11/2020 8:32:34 PM

Map Document: \\arcserver1\gis\FTDO\A13120799\ESRI\Maps\FTDO_ADA_Atlas.mxd | Date Saved: 11/11/2020 8:32:34 PM

Map Document: \\arcserver1\gis\FTDO\A13120799\ESRI\Maps\FTDO_ADA_Atlas.mxd | Date Saved: 11/11/2020 8:32:34 PM

Map Document: \\arcserver1\gis\FTDO\A13120799\ESRI\Maps\FTDO_ADA_Atlas.mxd | Date Saved: 11/11/2020 8:32:34 PM

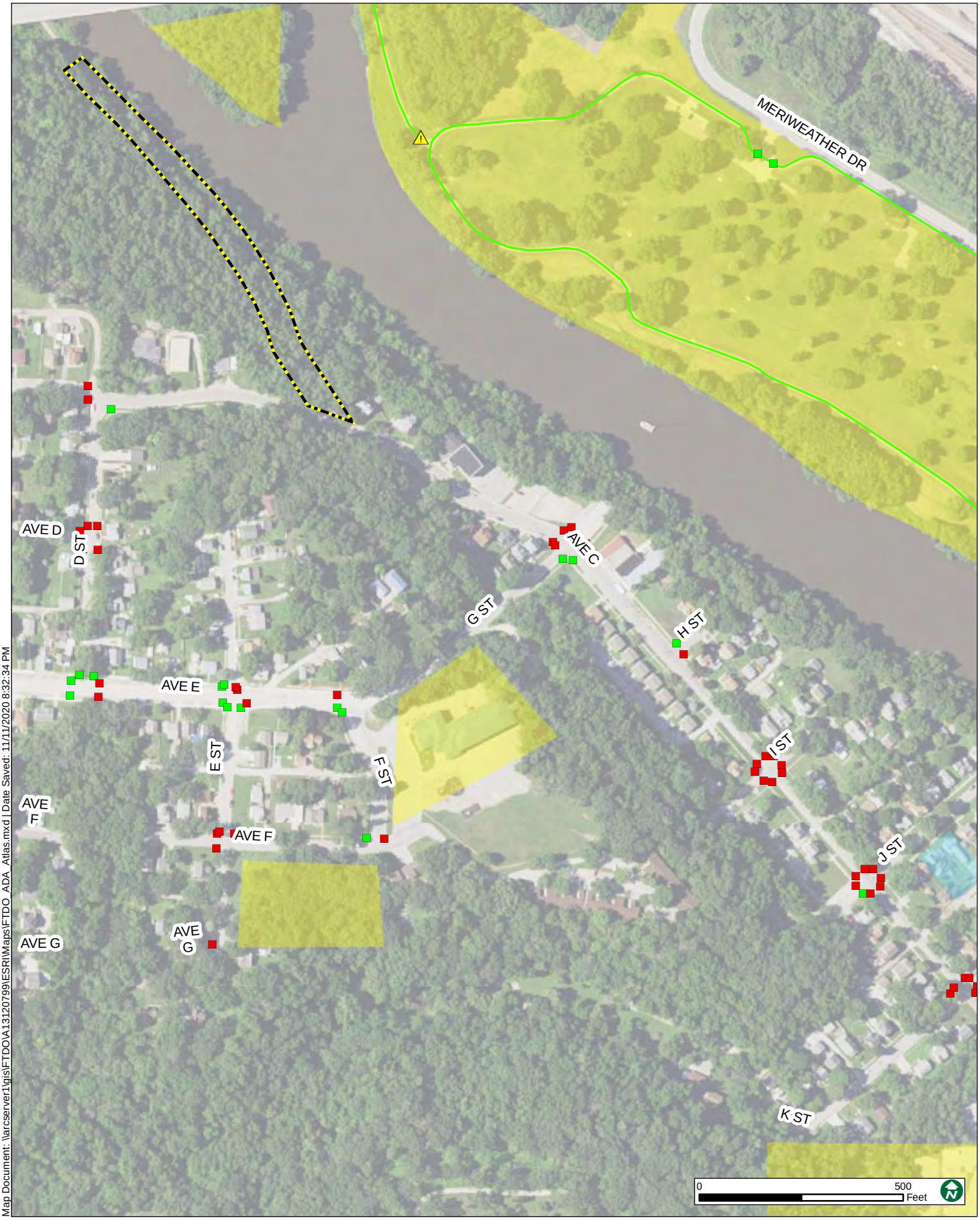

Map Document: \\arcserver1\gis\FTDO\A13120799\ESRI\Maps\FTDO_ADA_Atlas.mxd | Date Saved: 11/11/2020 8:32:34 PM

Map Document: \\arcserver1\gis\FTDO\A13120799\ESRI\Maps\FTDO_ADA_Atlas.mxd | Date Saved: 11/11/2020 8:32:34 PM

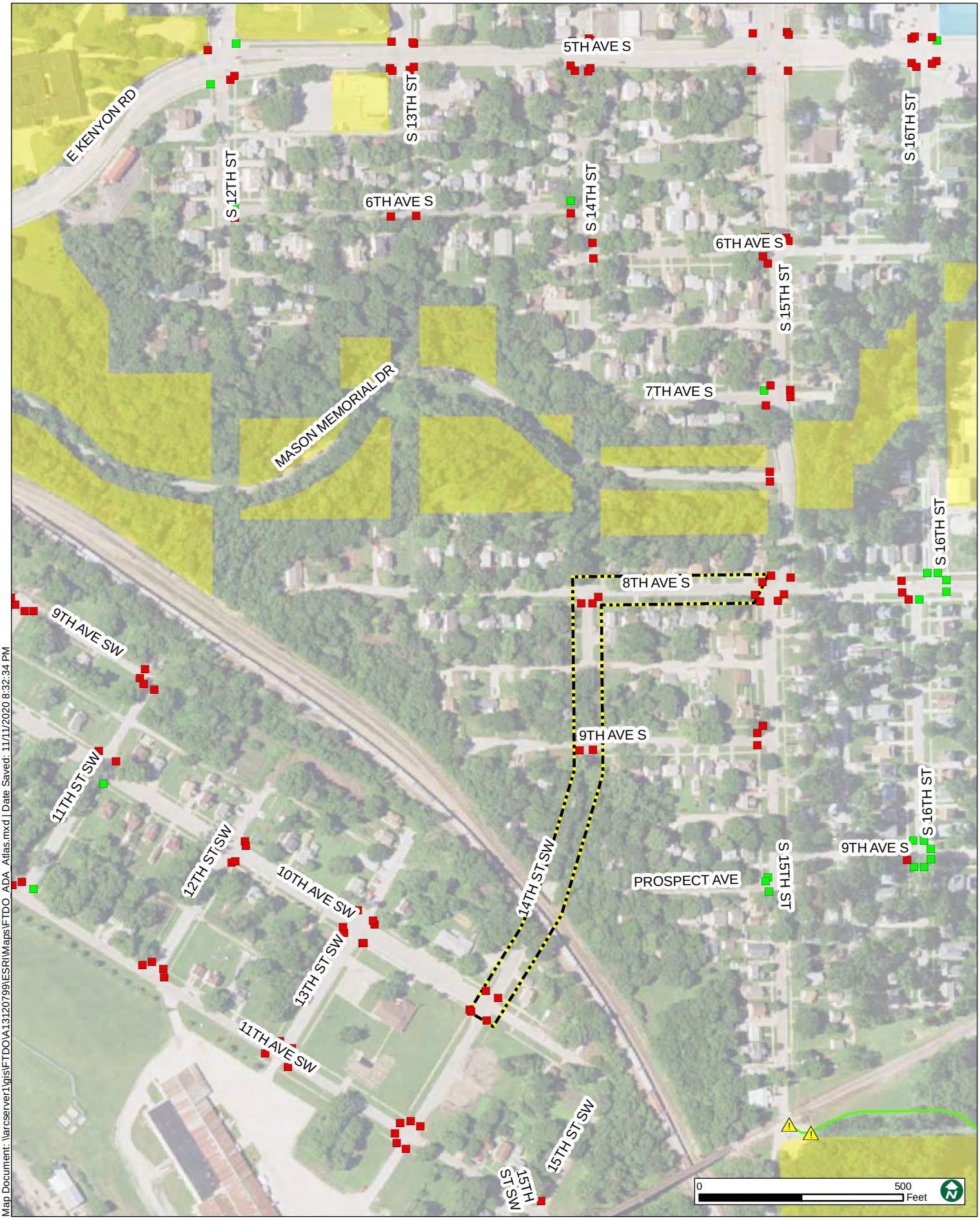

Map Document: \\arcserver1\gis\FTDO\A13120799\ESRI\Maps\FTDO_ADA_Atlas.mxd | Date Saved: 11/11/2020 8:32:34 PM

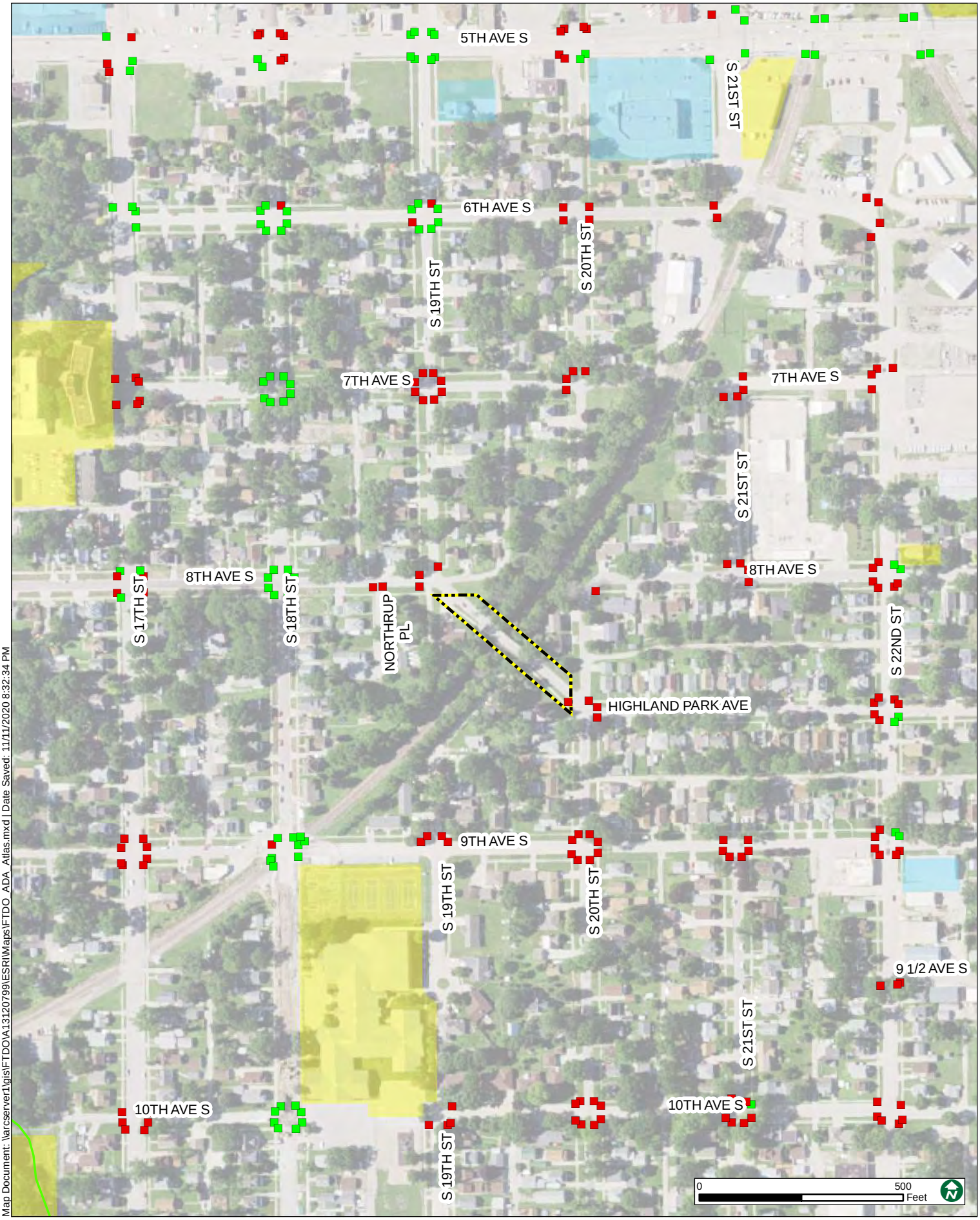
5TH AVE S
6TH AVE S
7TH AVE S
8TH AVE S
9TH AVE S
10TH AVE S
9 1/2 AVE S
S 17TH ST
S 18TH ST
S 19TH ST
S 20TH ST
S 21ST ST
S 22ND ST
NORTHRUP PL
HIGHLAND PARK AVE
0
500
Feet

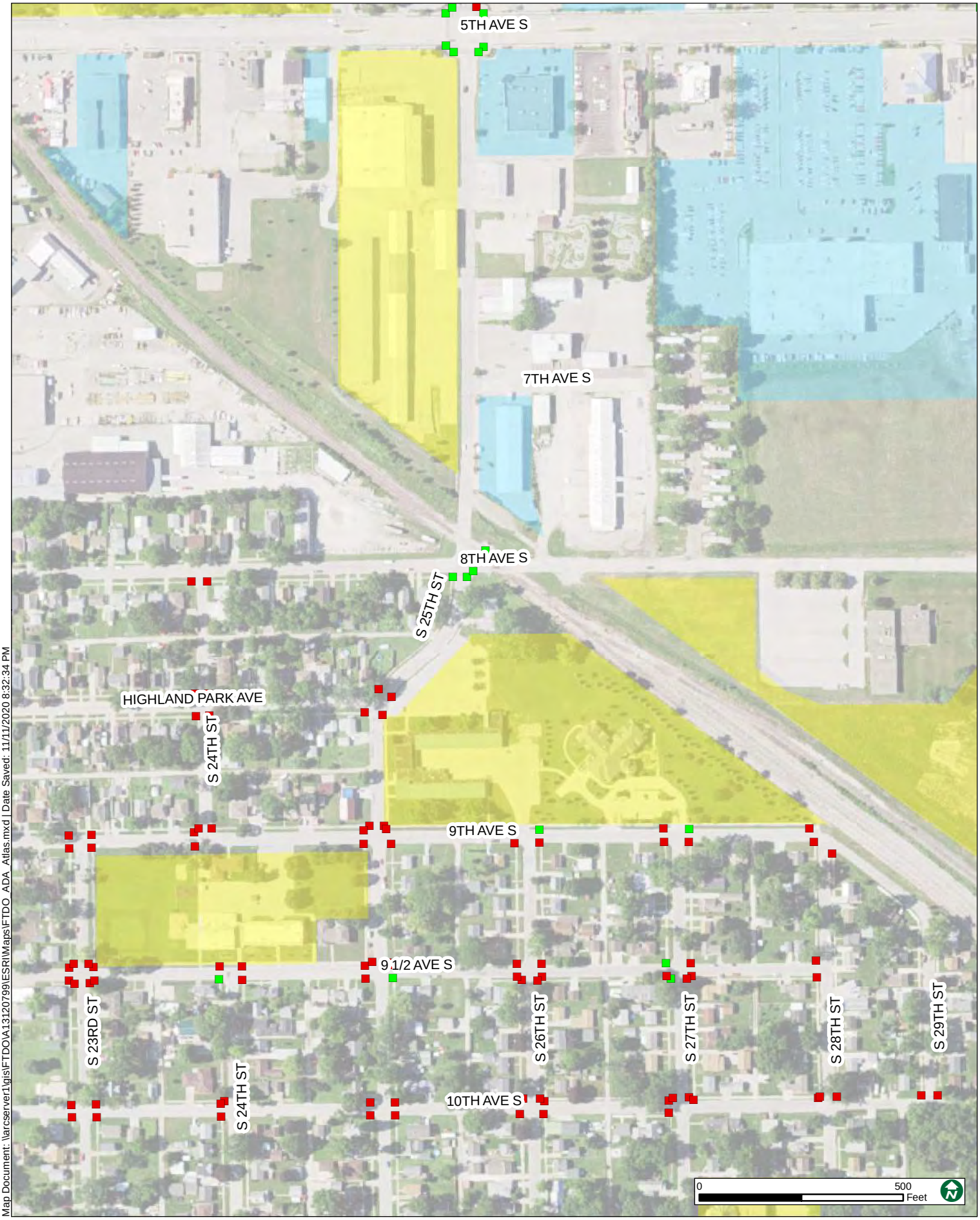

Map Document: \\arcserver1\gis\FTDO\A13120799\ESRI\Maps\FTDO_ADA_Atlas.mxd | Date Saved: 11/11/2020 8:32:34 PM

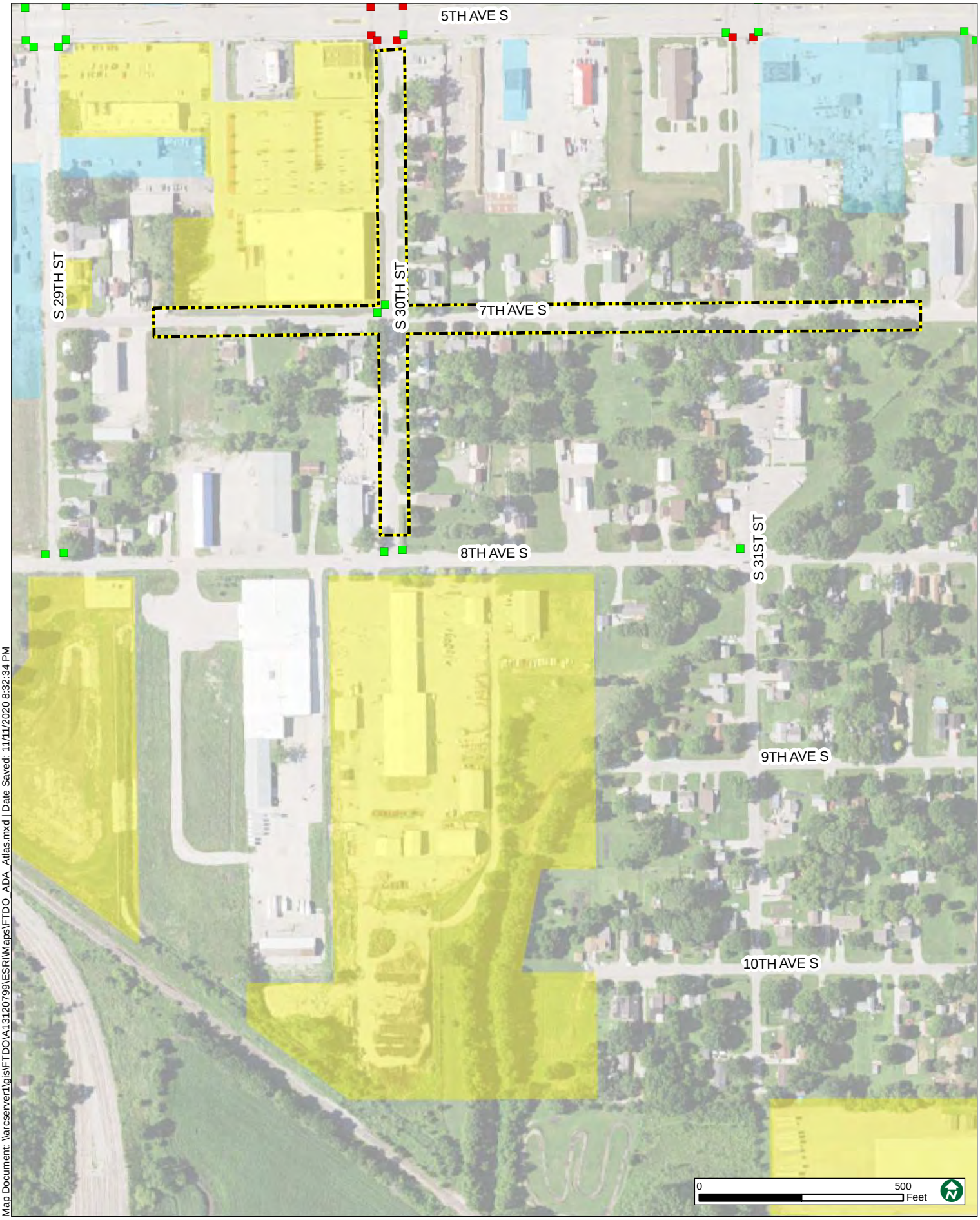

Map Document: \\arcserver1\gis\FTDO\A13120799\ESRI\Maps\FTDO_ADA_Atlas.mxd | Date Saved: 11/11/2020 8:32:34 PM

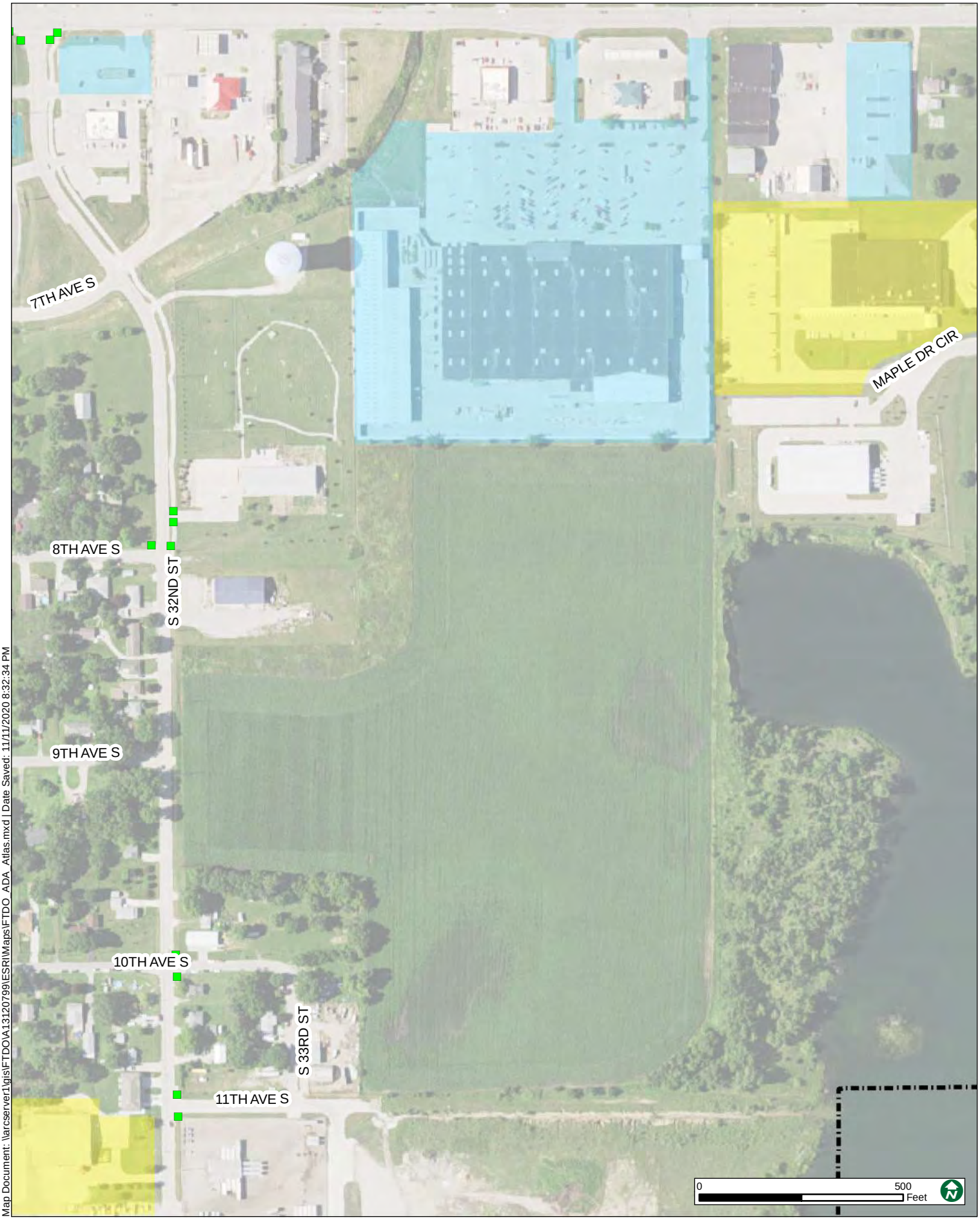

Map Document: \\arcserver1\gis\FTDO\A13120799\ESRI\Maps\FTDO_ADA_Atlas.mxd | Date Saved: 11/11/2020 8:32:34 PM

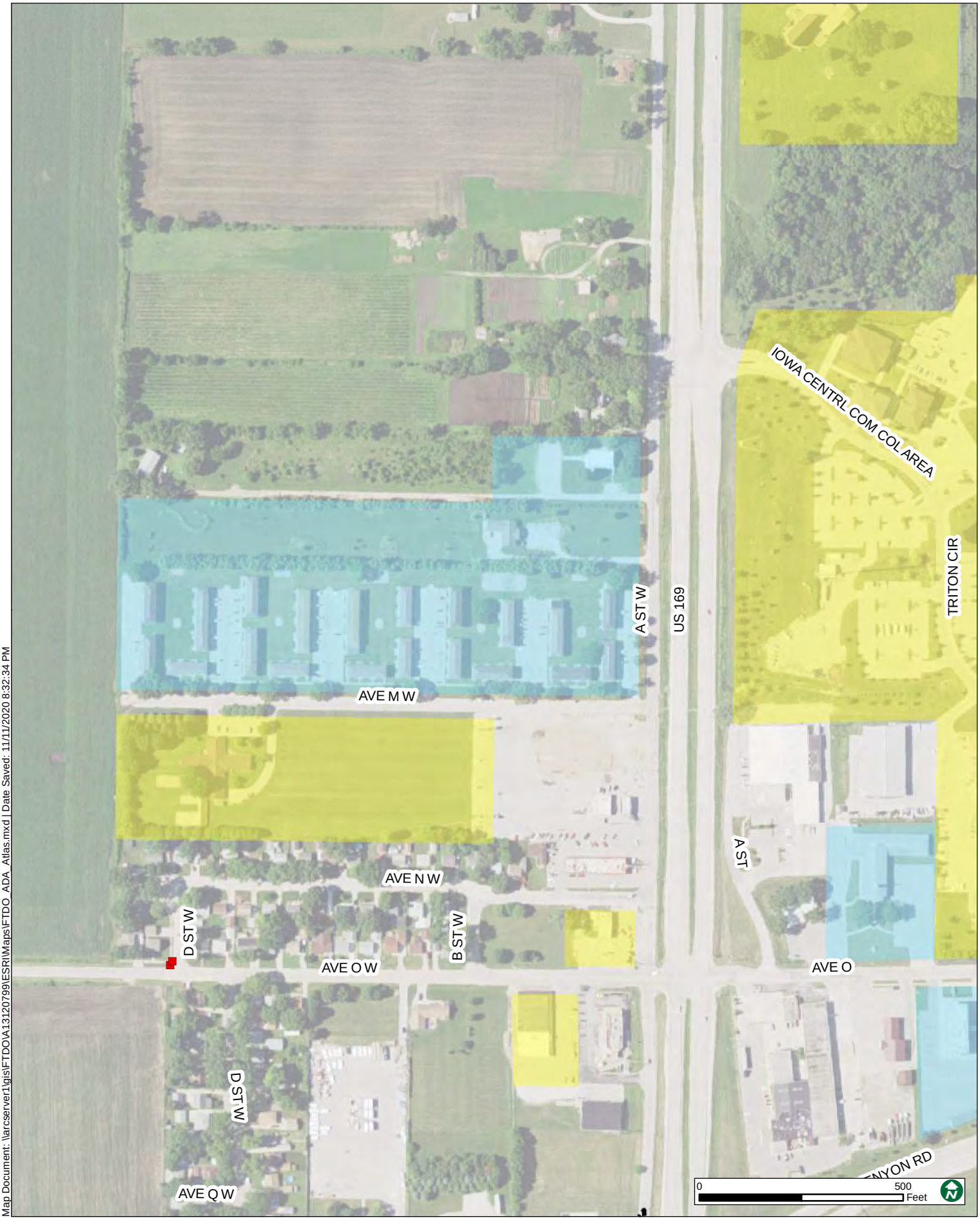

Map Document: \\arcserver1\gis\FTDO\A13120799\ESRI\Maps\FTDO_ADA_Atlas.mxd | Date Saved: 11/11/2020 8:32:34 PM

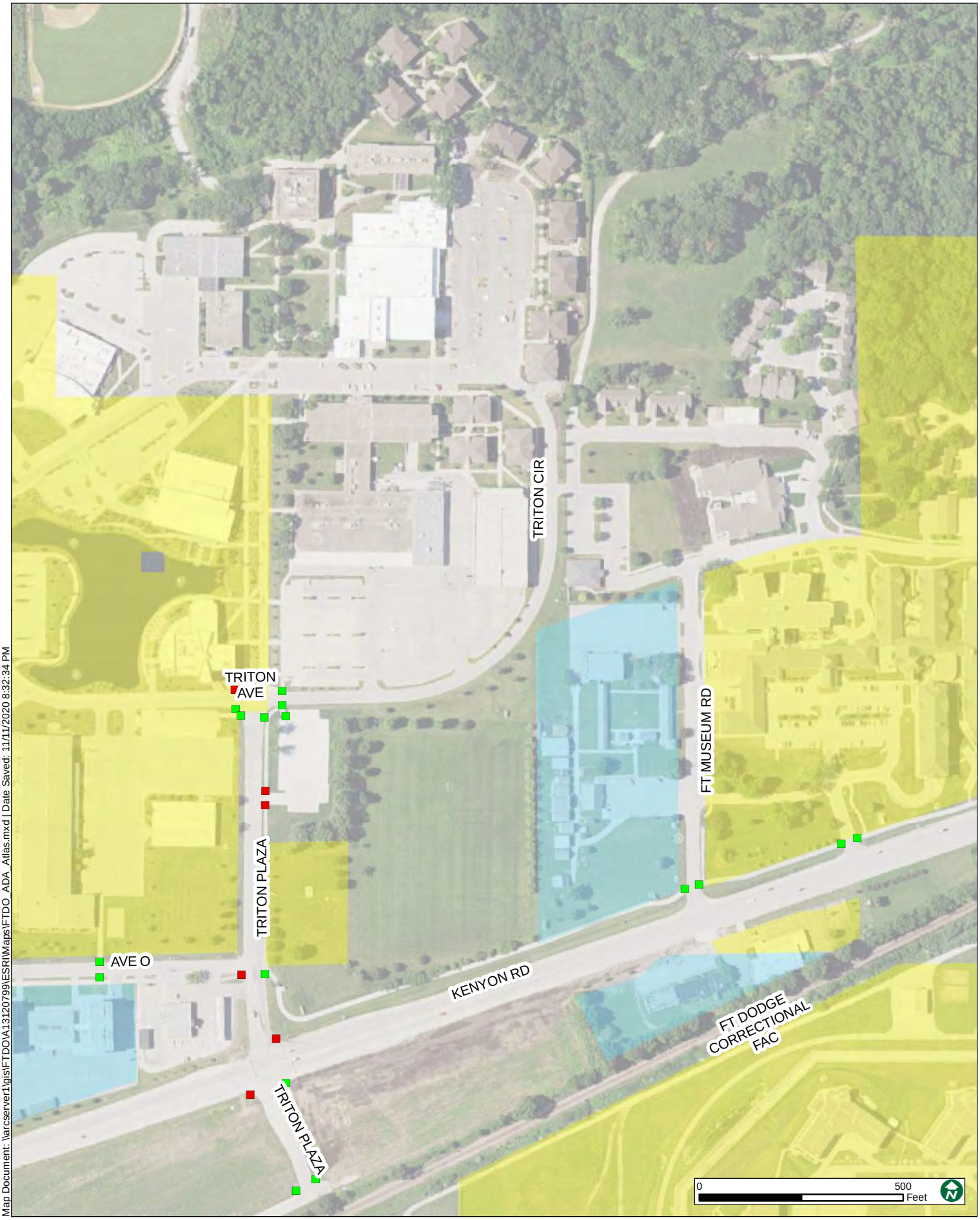

Map Document: \\arcserver1\gis\FTDO\A13120799\ESRI\Maps\FTDO_ADA_Atlas.mxd | Date Saved: 11/11/2020 8:32:34 PM

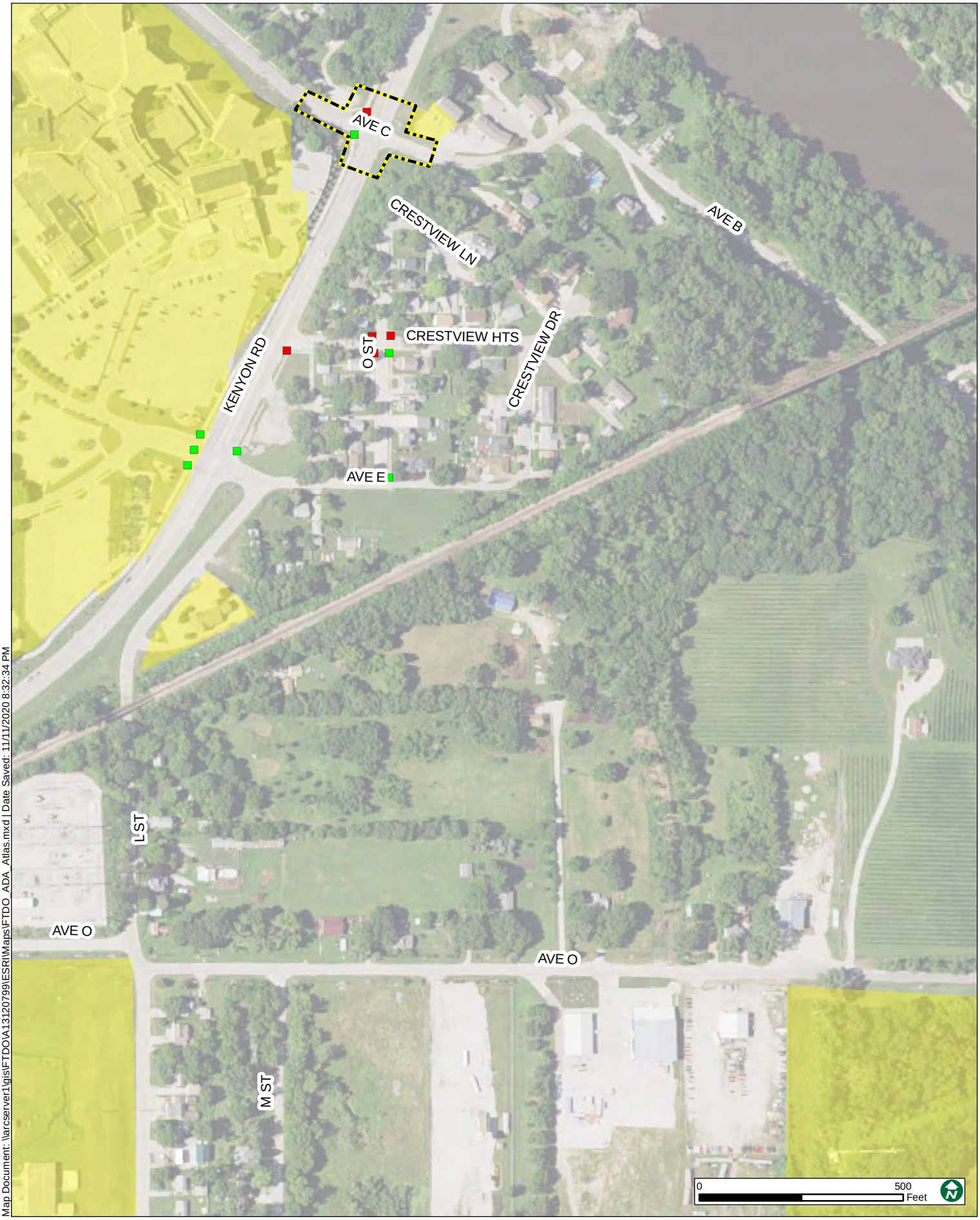

Map Document: \\arcserver1\gis\FTDO\A13120799\ESRI\Maps\FTDO_ADA_Atlas.mxd | Date Saved: 11/11/2020 8:32:34 PM

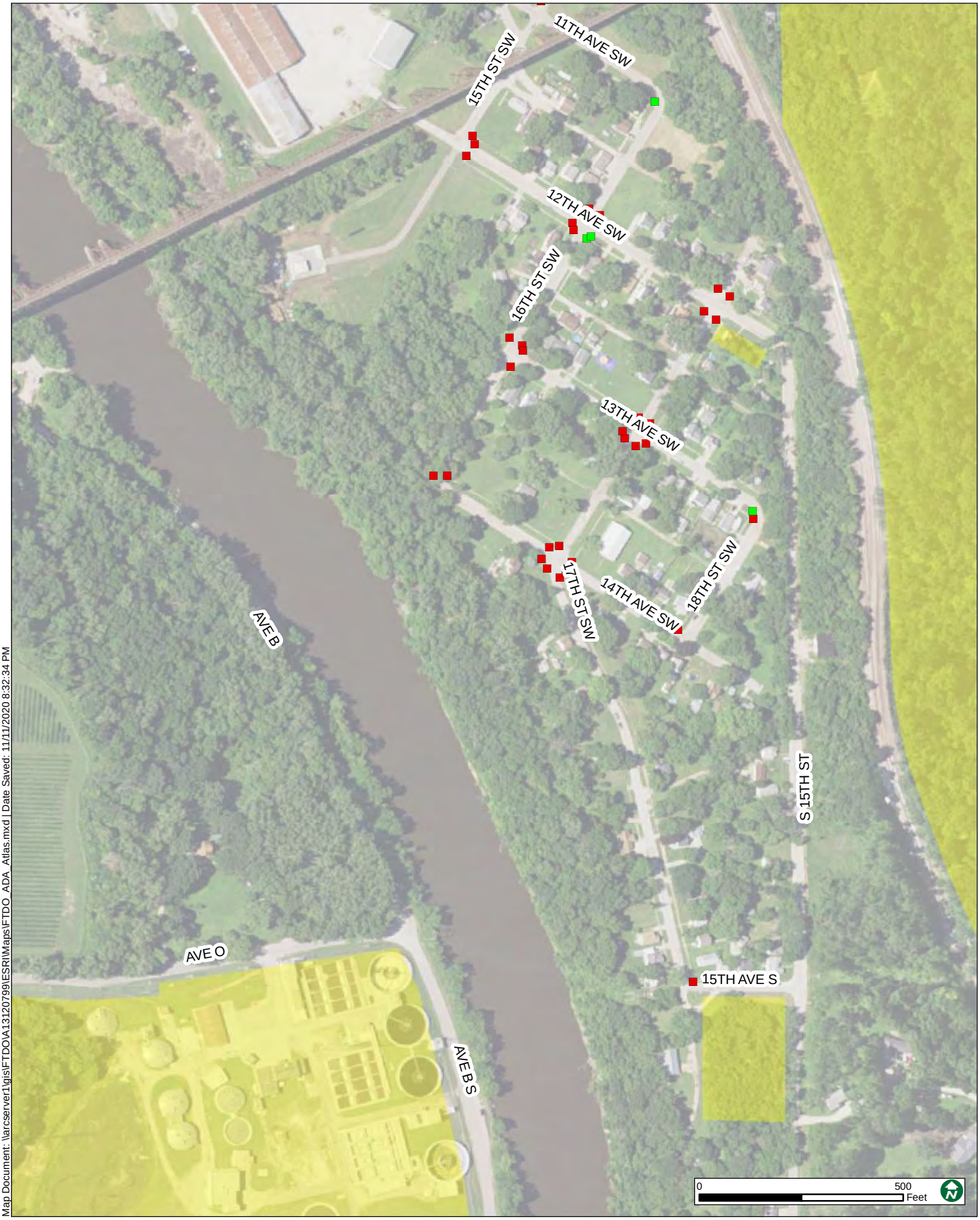

Map Document: \\arcserver1\gis\FTDO\A13120799\ESRI\Maps\FTDO_ADA_Atlas.mxd | Date Saved: 11/11/2020 8:32:34 PM

Map Document: \\arcserver1\gis\FTDO\A13120799\ESRI\Maps\FTDO_ADA_Atlas.mxd | Date Saved: 11/11/2020 8:32:34 PM

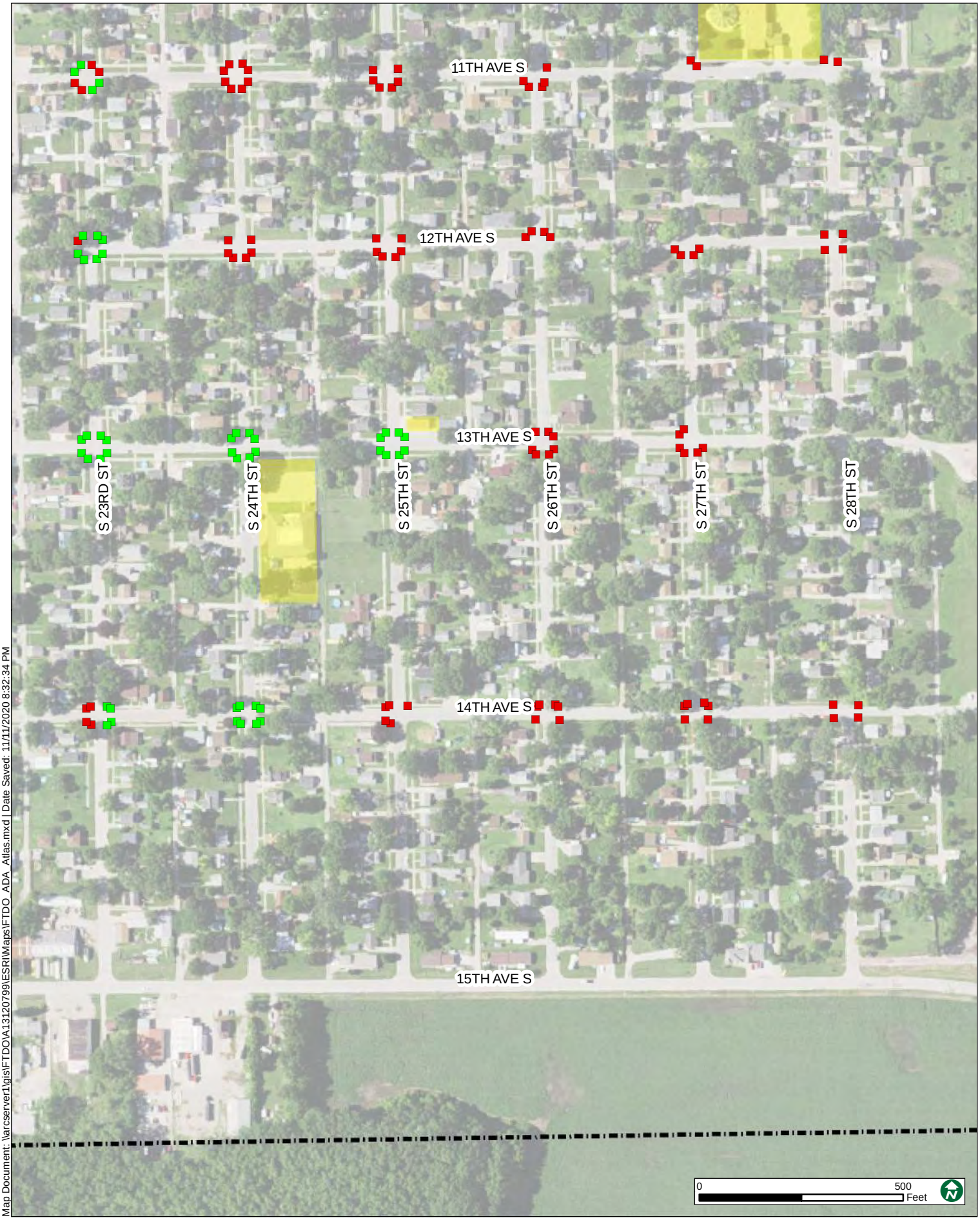

Map Document: \\arcserver1\gis\FTDO\A13120799\ESRI\Maps\FTDO_ADA_Atlas.mxd | Date Saved: 11/11/2020 8:32:34 PM

Map Document: \\arcserver1\gis\FTDO\A13120799\ESRI\Maps\FTDO_ADA_Atlas.mxd | Date Saved: 11/11/2020 8:32:34 PM

Table B-1: City of Fort Dodge Program Review - Implementation Plan

Location	Land Use	Sidewalk Remediation Cost	Pedestrian Ramp Remediation Cost	Bus Stop Remediation Cost	Traffic Signal Remediation Cost	Crosswalk Remediation Cost	Railroad Crossing Remediation Cost	Barrier Remediation Cost	Priority	CIP Project	Total Cost	Rank	Running Total Cost
Central River District - Sunkissed Connector	Schools; CBD; Parks	$0	$0	$0	$0	$0	$0	$400	1		$400	1	$400
Rosedal Rapids Loop	Schools; Parks	$0	$0	$0	$0	$0	$0	$0	1		$0	2	$400
Snell-Crawford Internal	Schools; Parks	$4,358	$0	$0	$0	$0	$0	$1,200	1	Recreational Trail Repairs (Snell-Crawford Park)	$5,558	3	$5,958
Mason Park	Schools; Parks	$16,358	$0	$0	$0	$0	$0	$0	1		$16,358	4	$22,316
Oleson Park	Schools; Parks	$0	$0	$0	$0	$0	$0	$7,800	1	15th Ave S Reconstruction	$7,800	5	$30,116
Rosedale Rapids Playground / Trail	Schools; Parks	$0	$0	$0	$0	$0	$0	$800	1		$800	6	$30,916
Sunkissed - Kenyon Road Connector	Schools; Parks	$0	$0	$0	$0	$0	$0	$800	1	Kenyon Rd to Pleasant Valley Connection	$800	7	$31,716
Sunkissed Meadows	Schools; Parks	$0	$0	$0	$0	$0	$0	$0	1		$0	8	$31,716
Mini Park	Schools; Parks	$0	$0	$0	$0	$0	$0	$0	1		$0	9	$31,716
Sunkissed Meadows Loop	Schools; CBD; Parks	$22,127	$0	$0	$0	$0	$0	$400	1		$22,527	10	$54,243
N 27TH ST & 20TH AVE N	Schools	$0	$24,000	$0	$0	$0	$0	$0	1		$24,000	11	$78,243
1ST AVE S & S 5TH ST	Schools; CBD	$0	$38,000	$0	$0	$0	$0	$0	1		$38,000	12	$116,243
21ST AVE N & N 29TH ST	Schools	$0	$26,000	$0	$0	$0	$0	$0	1		$26,000	13	$142,243
N 18TH ST & 4TH AVE N	Schools	$0	$36,000	$0	$0	$0	$0	$0	1		$36,000	14	$178,243
21ST AVE N & N 30TH CT	Schools	$0	$21,000	$0	$0	$0	$0	$0	1		$21,000	15	$199,243
2ND AVE N & N 16TH ST	Schools; Shopping malls, supermarkets and strip retail centers	$0	$12,000	$0	$0	$0	$0	$0	1		$12,000	16	$211,243
3RD AVE N & N 14TH ST	Schools	$0	$0	$0	$0	$0	$0	$0	1		$0	17	$211,243
11TH AVE S & S 22ND ST	Schools	$0	$26,000	$0	$0	$0	$0	$0	1		$26,000	18	$237,243
10TH AVE S & S 26TH ST	Schools	$0	$36,000	$0	$0	$0	$0	$0	1		$36,000	19	$273,243
S 25TH ST & 13TH AVE S	Schools; Bus Stop	$0	$0	$0	$0	$0	$0	$0	1		$0	20	$273,243
3RD AVE S & S 17TH ST	Schools	$0	$0	$0	$0	$0	$0	$0	1		$0	21	$273,243
N 15TH ST & 1ST AVE N	Schools; Shopping malls, supermarkets and strip retail centers	$0	$48,000	$0	$0	$0	$0	$0	1		$48,000	22	$321,243
1ST AVE N & N 11TH ST	Schools; CBD; Hospitals, Health Clinics, and Medical Facilities (Public and Private)	$0	$36,000	$0	$0	$0	$0	$0	1	Main Street Streetscape 9th St - 12th St	$36,000	23	$357,243
6TH AVE S & S 12TH ST	Schools	$0	$6,000	$0	$0	$0	$0	$0	1		$6,000	24	$363,243
N 32ND ST CONN & 10TH AVE N CONN & 10TH AVE N & N 32ND ST	Schools	$0	$0	$0	$0	$0	$0	$0	1		$0	25	$363,243
9TH AVE S & S 23RD ST	Schools	$0	$24,000	$0	$0	$0	$0	$0	1		$24,000	26	$387,243
COMMERCE ST & S 4TH ST	Schools	$0	$6,000	$0	$0	$0	$0	$0	1		$6,000	27	$393,243
N 32ND ST & 10TH AVE N	Schools	$0	$0	$0	$0	$0	$0	$0	1		$0	28	$393,243
N 4TH ST & CENTRAL AVE	Schools; Bus Stop; CBD; Housing complexes, including apartments; Libraries	$0	$18,000	$0	$0	$0	$0	$0	1	Main Street Streetscape 3rd St - 6th St	$18,000	29	$411,243
10TH AVE S & S 21ST ST	Schools	$0	$17,000	$0	$0	$0	$0	$0	1		$17,000	30	$428,243
3RD AVE S & S 18TH ST	Schools	$0	$0	$0	$0	$0	$0	$0	1		$0	31	$428,243
9TH AVE S & S 17TH ST	Schools	$0	$23,000	$0	$0	$0	$0	$0	1		$23,000	32	$451,243
TIMBER LN & N 22ND ST & 16TH AVE N & 15TH AVE N	Schools	$0	$0	$0	$0	$0	$0	$0	1		$0	33	$451,243
N 5TH ST & CENTRAL AVE	Schools; CBD; Parks	$0	$14,000	$0	$0	$0	$0	$0	1	Main Street Streetscape 3rd St - 6th St	$14,000	34	$465,243
4TH AVE S & S 8TH ST	Schools; CBD; Hospitals, Health Clinics, and Medical Facilities (Public and Private)	$0	$21,000	$0	$0	$0	$0	$0	1		$21,000	35	$486,243
4TH AVE S & S 14TH ST	Schools	$0	$48,000	$0	$0	$0	$0	$0	1		$48,000	36	$534,243
12TH AVE S & S 25TH ST	Schools	$0	$36,000	$0	$0	$0	$0	$0	1		$36,000	37	$570,243
S 26TH ST & 11TH AVE S	Schools	$0	$36,000	$0	$0	$0	$0	$0	1		$36,000	38	$606,243

Table B-1: City of Fort Dodge Program Review - Implementation Plan													
Location	Land Use	Sidewalk Remediation Cost	Pedestrian Ramp Remediation Cost	Bus Stop Remediation Cost	Traffic Signal Remediation Cost	Crosswalk Remediation Cost	Railroad Crossing Remediation Cost	Barrier Remediation Cost	Priority	CIP Project	Total Cost	Rank	Running Total Cost
10TH AVE S & S 22ND ST	Schools	$0	$11,000	$0	$0	$0	$0	$0	1		$11,000	39	$617,243
N 4TH ST & S 4TH ST & CENTRAL AVE	Schools; CBD; Housing complexes, including apartments; Shopping malls, supermarkets and strip retail centers	$0	$30,000	$0	$0	$0	$0	$0	1	Main Street Streetscape 3rd St - 6th St	$30,000	40	$647,243
N 24TH ST & 10TH AVE N & N 25TH ST	Schools; Polling Locations	$0	$6,000	$0	$0	$0	$0	$0	1		$6,000	41	$653,243
1ST AVE N & N 10TH ST	Schools; CBD; Churches and Places of Worship; Housing complexes, including apartments; Public Housing and Homeless Shelters	$0	$36,000	$0	$0	$0	$0	$0	1	Main Street Streetscape 9th St - 12th St	$36,000	42	$689,243
12TH AVE S & S 21ST ST	Schools	$0	$0	$0	$0	$0	$0	$0	1		$0	43	$689,243
5TH AVE N & N 9TH ST	Schools; Bus Stop	$0	$37,000	$0	$0	$0	$0	$0	1		$37,000	44	$726,243
2ND AVE S & S 7TH ST	Schools; Bus Stop; CBD; Churches and Places of Worship	$0	$33,000	$0	$0	$0	$0	$0	1		$33,000	45	$759,243
3RD AVE N & N 9TH ST	Schools	$0	$13,000	$0	$0	$0	$0	$0	1		$13,000	46	$772,243
2ND AVE N & N 13TH ST	Schools	$0	$11,000	$0	$0	$0	$0	$0	1		$11,000	47	$783,243
1ST AVE S & S 19TH ST	Schools; Shopping malls, supermarkets and strip retail centers	$0	$0	$0	$0	$0	$0	$0	1		$0	48	$783,243
9TH AVE S & S 21ST ST	Schools	$0	$26,000	$0	$0	$0	$0	$0	1		$26,000	49	$809,243
S 8TH ST & 3RD AVE S	Schools; CBD	$0	$14,000	$0	$0	$0	$0	$0	1		$14,000	50	$823,243
2ND AVE N & N 17TH ST	Schools	$0	$0	$0	$0	$0	$0	$0	1		$0	51	$823,243
7TH AVE N & N 23RD ST	Schools; Hospitals, Health Clinics, and Medical Facilities (Public and Private)	$0	$1,000	$0	$0	$0	$0	$0	1		$1,000	52	$824,243
3RD AVE S & S 19TH ST	Schools	$0	$0	$0	$0	$0	$0	$0	1		$0	53	$824,243
5TH AVE S & S 25TH ST	Schools; Shopping malls, supermarkets and strip retail centers	$0	$6,000	$0	$0	$0	$0	$0	1		$6,000	54	$830,243
5TH AVE N & N 12TH ST	Schools; Polling Locations	$0	$18,000	$0	$0	$0	$0	$0	1		$18,000	55	$848,243
E ST & AVE E	Schools	$0	$18,000	$0	$0	$0	$0	$0	1		$18,000	56	$866,243
1ST AVE N & N 18TH ST	Schools	$0	$38,000	$0	$0	$0	$0	$0	1		$38,000	57	$904,243
4TH AVE S & S 9TH ST	Schools	$0	$6,000	$0	$0	$0	$0	$0	1		$6,000	58	$910,243
1ST AVE N & N 7TH ST	Schools; CBD; Public Housing and Homeless Shelters	$0	$0	$0	$0	$0	$0	$0	1	Main Street Streetscape 6th St - 9th St	$0	59	$910,243
N 6TH ST	Schools; CBD	$0	$0	$0	$0	$0	$0	$0	1	Main Street Streetscape 3rd St - 6th St	$0	60	$910,243
6TH AVE S & S 14TH ST	Schools	$0	$8,000	$0	$0	$0	$0	$0	1		$8,000	61	$918,243
N 11TH ST & S 11TH ST & CENTRAL AVE	Schools; Bus Stop; CBD; Shopping malls, supermarkets and strip retail centers	$0	$13,000	$0	$0	$0	$0	$0	1	Main Street Streetscape 9th St - 12th St	$13,000	62	$931,243
8TH AVE S & S 17TH ST	Schools	$0	$24,000	$0	$0	$0	$0	$0	1		$24,000	63	$955,243
9TH AVE SW & 11TH ST SW	Schools	$0	$24,000	$0	$0	$0	$0	$0	1		$24,000	64	$979,243
10TH AVE N	Schools	$0	$0	$0	$0	$0	$0	$0	1		$0	65	$979,243
4TH AVE S & S 6TH ST	Schools	$0	$0	$0	$0	$0	$0	$0	1		$0	66	$979,243
N 5TH ST & 1ST AVE N	Schools; CBD	$0	$0	$0	$0	$0	$0	$0	1	Main Street Streetscape 3rd St - 6th St	$0	67	$979,243
HIGHLAND PARK AVE & S 22ND ST	Schools	$0	$36,000	$0	$0	$0	$0	$0	1		$36,000	68	$1,015,243
4TH AVE N & N 13TH ST	Schools	$0	$25,000	$0	$0	$0	$0	$0	1		$25,000	69	$1,040,243
ELMHURST AVE & N 23RD ST & N 23RD PL	Schools	$0	$0	$0	$0	$0	$0	$0	1		$0	70	$1,040,243
S 13TH ST & 5TH AVE S	Schools; Government Facilities	$0	$27,000	$0	$0	$0	$0	$0	1		$27,000	71	$1,067,243
S 15TH ST & 2ND AVE S	Schools	$0	$19,000	$0	$0	$0	$0	$0	1		$19,000	72	$1,086,243
9 1/2 AVE S & S 24TH ST	Schools	$0	$18,000	$0	$0	$0	$0	$0	1		$18,000	73	$1,104,243
N 16TH ST & 6TH AVE N	Schools	$0	$0	$0	$0	$0	$0	$0	1		$0	74	$1,104,243

Table B-1: City of Fort Dodge Program Review - Implementation Plan

Location	Land Use	Sidewalk Remediation Cost	Pedestrian Ramp Remediation Cost	Bus Stop Remediation Cost	Traffic Signal Remediation Cost	Crosswalk Remediation Cost	Railroad Crossing Remediation Cost	Barrier Remediation Cost	Priority	CIP Project	Total Cost	Rank	Running Total Cost
S 14TH ST & 1ST AVE S	Schools; CBD; Hospitals, Health Clinics, and Medical Facilities (Public and Private)	$0	$0	$0	$0	$0	$0	$0	1		$0	75	$1,104,243
14TH AVE S & S 21ST ST	Schools	$0	$31,000	$0	$0	$0	$0	$0	1	15th Ave S Reconstruction	$31,000	76	$1,135,243
14TH ST SW & 8TH AVE S	Schools	$0	$8,000	$0	$0	$0	$0	$0	1	east to 15th St; S 14th St: 10th A SW to 8th A S	$8,000	77	$1,143,243
N 22ND ST & 4TH AVE N	Schools	$0	$6,000	$0	$0	$0	$0	$0	1		$6,000	78	$1,149,243
G ST & AVE C	Schools	$0	$31,000	$0	$0	$0	$0	$0	1		$31,000	79	$1,180,243
S 26TH ST & 14TH AVE S	Schools	$0	$36,000	$0	$0	$0	$0	$0	1		$36,000	80	$1,216,243
N 29TH ST & 10TH AVE N	Schools; Housing complexes, including apartments	$0	$0	$0	$0	$0	$0	$0	1		$0	81	$1,216,243
3RD AVE S & S 7TH ST	Schools; CBD	$0	$0	$0	$0	$0	$0	$0	1		$0	82	$1,216,243
N 12TH ST & CENTRAL AVE	Schools; CBD	$0	$6,000	$0	$0	$0	$0	$0	1	Main Street Streetscape 9th St - 12th St	$6,000	83	$1,222,243
ELMHURST AVE & N 23RD ST	Schools	$0	$0	$0	$0	$0	$0	$0	1		$0	84	$1,222,243
15TH AVE S & S 22ND ST	Schools	$0	$0	$0	$0	$0	$0	$0	1	15th Ave S Reconstruction	$0	85	$1,222,243
4TH AVE S & S 7TH ST	Schools; Bus Stop	$0	$0	$0	$0	$0	$0	$0	1		$0	86	$1,222,243
10TH AVE S & S 23RD ST	Schools	$0	$24,000	$0	$0	$0	$0	$0	1		$24,000	87	$1,246,243
7TH AVE N	Schools	$0	$0	$0	$0	$0	$0	$0	1		$0	88	$1,246,243
2ND AVE N & N 9TH ST	Schools; Bus Stop; CBD	$0	$24,000	$0	$0	$0	$0	$0	1		$24,000	89	$1,270,243
S 16TH ST & 8TH AVE S	Schools	$0	$8,000	$0	$0	$0	$0	$0	1		$8,000	90	$1,278,243
13TH AVE N & N 13TH ST	Schools	$0	$0	$0	$0	$0	$0	$0	1		$0	91	$1,278,243
HASKELL ST & N 3RD ST	Schools	$0	$12,000	$0	$0	$0	$0	$0	1		$12,000	92	$1,290,243
NORTHWOOD AVE & 7TH AVE N & N 11TH ST	Schools	$0	$2,000	$0	$0	$0	$0	$0	1		$2,000	93	$1,292,243
1ST AVE N & N 21ST ST	Schools; Shopping malls, supermarkets and strip retail centers	$0	$24,000	$0	$0	$0	$0	$0	1		$24,000	94	$1,316,243
S 29TH ST & 5TH AVE S	Schools; Hospitals, Health Clinics, and Medical Facilities (Public and Private)	$0	$0	$0	$0	$0	$0	$0	1		$0	95	$1,316,243
N 27TH ST & MARTIN LUTHER KING DR	Schools	$0	$1,000	$0	$0	$0	$0	$0	1		$1,000	96	$1,317,243
S 27TH ST & 13TH AVE S	Schools	$0	$31,000	$0	$0	$0	$0	$0	1		$31,000	97	$1,348,243
8TH AVE N & N 23RD ST	Schools; Housing complexes, including apartments	$0	$2,000	$0	$0	$0	$0	$0	1		$2,000	98	$1,350,243
4TH AVE S & S 10TH ST	Schools	$0	$7,000	$0	$0	$0	$0	$0	1		$7,000	99	$1,357,243
WRAYWOOD DR & RIVER FOREST DR	Schools	$0	$0	$0	$0	$0	$0	$0	1		$0	100	$1,357,243
N 32ND ST CONN & 10TH AVE N CONN & N 32ND ST	Schools	$0	$0	$0	$0	$0	$0	$0	1		$0	101	$1,357,243
9TH AVE S & S 18TH ST	Schools	$0	$6,000	$0	$0	$0	$0	$0	1		$6,000	102	$1,363,243
S 16TH ST & 5TH AVE S	Schools; Shopping malls, supermarkets and strip retail centers	$0	$32,000	$0	$0	$0	$0	$0	1		$32,000	103	$1,395,243
N 21ST ST & 6TH AVE N	Schools	$0	$12,000	$0	$0	$0	$0	$0	1		$12,000	104	$1,407,243
2ND AVE S & S 12TH ST	Schools; Bus Stop; CBD	$0	$19,000	$0	$0	$0	$0	$0	1		$19,000	105	$1,426,243
HIGHLAND PARK AVE & 8TH AVE S & S 19TH ST	Schools	$0	$6,000	$0	$0	$0	$0	$0	1	Highland Park Bridge Replacement	$6,000	106	$1,432,243
4TH AVE S & S 19TH ST	Schools; Churches and Places of Worship	$0	$0	$0	$0	$0	$0	$0	1		$0	107	$1,432,243
N 15TH ST & 10TH AVE N	Schools	$0	$18,000	$0	$0	$0	$0	$0	1	N 15th St Corridor Phase 3: 6th A N - 20th A N	$18,000	108	$1,450,243
7TH AVE N & N 21ST ST	Schools	$0	$14,000	$0	$0	$0	$0	$0	1		$14,000	109	$1,464,243
2ND AVE S & S 10TH ST	Schools; CBD	$0	$0	$0	$0	$0	$0	$0	1		$0	110	$1,464,243

Table B-1: City of Fort Dodge Program Review - Implementation Plan													
Location	Land Use	Sidewalk Remediation Cost	Pedestrian Ramp Remediation Cost	Bus Stop Remediation Cost	Traffic Signal Remediation Cost	Crosswalk Remediation Cost	Railroad Crossing Remediation Cost	Barrier Remediation Cost	Priority	CIP Project	Total Cost	Rank	Running Total Cost
12TH AVE S & S 27TH ST	Schools	$0	$19,000	$0	$0	$0	$0	$0	1		$19,000	111	$1,483,243
1ST AVE N & N 8TH ST	Schools; CBD; Hospitals, Health Clinics, and Medical Facilities (Public and Private)	$0	$33,000	$0	$0	$0	$0	$0	1	Main Street Streetscape 6th St - 9th St	$33,000	112	$1,516,243
N 10TH ST & S 10TH ST & CENTRAL AVE	Schools; CBD; Industrial; Shopping malls, supermarkets and strip retail centers	$0	$13,000	$0	$0	$0	$0	$0	1	Main Street Streetscape 9th St - 12th St	$13,000	113	$1,529,243
S 16TH ST & 3RD AVE S	Schools	$0	$0	$0	$0	$0	$0	$0	1		$0	114	$1,529,243
N 19TH ST & 3RD AVE N	Schools	$0	$42,000	$0	$0	$0	$0	$0	1		$42,000	115	$1,571,243
3RD AVE S & S 10TH ST	Schools	$0	$24,000	$0	$0	$0	$0	$0	1		$24,000	116	$1,595,243
12TH AVE S & S 26TH ST	Schools	$0	$24,000	$0	$0	$0	$0	$0	1		$24,000	117	$1,619,243
9 1/2 AVE S & S 28TH ST	Schools	$0	$12,000	$0	$0	$0	$0	$0	1		$12,000	118	$1,631,243
16TH AVE N & N 13TH ST	Schools	$0	$14,000	$0	$0	$0	$0	$0	1		$14,000	119	$1,645,243
14TH AVE N & KRAMME DR	Schools	$0	$18,000	$0	$0	$0	$0	$0	1		$18,000	120	$1,663,243
N 16TH ST & 10TH AVE N	Schools	$0	$6,000	$0	$0	$0	$0	$0	1		$6,000	121	$1,669,243
N 10TH ST	Schools; CBD; Churches and Places of Worship	$0	$18,000	$0	$0	$0	$0	$0	1	Main Street Streetscape 9th St - 12th St	$18,000	122	$1,687,243
1ST AVE N & N 16TH ST	Schools; Hospitals, Health Clinics, and Medical Facilities (Public and Private); Shopping malls, supermarkets and strip retail centers	$0	$25,000	$0	$0	$0	$0	$0	1		$25,000	123	$1,712,243
1ST AVE N & N 3RD ST	Schools; Bus Stop; CBD	$0	$0	$0	$0	$0	$0	$0	1		$0	124	$1,712,243
N 9TH ST & 3RD AVE N	Schools	$0	$3,000	$0	$0	$0	$0	$0	1		$3,000	125	$1,715,243
N 27TH ST & N 26TH ST & 16TH AVE N	Schools	$0	$12,000	$0	$0	$0	$0	$0	1		$12,000	126	$1,727,243
5TH AVE S & S 17TH ST	Schools; Shopping malls, supermarkets and strip retail centers	$0	$18,000	$0	$0	$0	$0	$0	1		$18,000	127	$1,745,243
N 27TH ST & 4TH AVE N	Schools	$0	$19,000	$0	$0	$0	$0	$0	1		$19,000	128	$1,764,243
19TH AVE N & N 29TH ST	Schools	$0	$36,000	$0	$0	$0	$0	$0	1		$36,000	129	$1,800,243
13TH PL S & S 21ST ST	Schools	$0	$6,000	$0	$0	$0	$0	$0	1		$6,000	130	$1,806,243
N 13TH ST & 6TH AVE N	Schools	$0	$13,000	$0	$0	$0	$0	$0	1		$13,000	131	$1,819,243
16TH AVE N & N 29TH ST	Schools	$0	$43,000	$0	$0	$0	$0	$0	1		$43,000	132	$1,862,243
N 18TH ST & 10TH AVE N	Schools	$0	$0	$0	$0	$0	$0	$0	1		$0	133	$1,862,243
11TH AVE S & S 18TH ST	Schools	$0	$0	$0	$0	$0	$0	$0	1		$0	134	$1,862,243
N 16TH ST & 7TH AVE N	Schools	$0	$0	$0	$0	$0	$0	$0	1		$0	135	$1,862,243
NORTHWOOD AVE & 7TH AVE N & N 11TH ST & CREST AVE	Schools	$0	$11,000	$0	$0	$0	$0	$0	1	2020 Annual Street Repair Project	$11,000	136	$1,873,243
N 18TH ST & 6TH AVE N	Schools	$0	$22,000	$0	$0	$0	$0	$0	1		$22,000	137	$1,895,243
3RD AVE N & N 11TH ST	Schools	$0	$20,000	$0	$0	$0	$0	$0	1		$20,000	138	$1,915,243
3RD AVE S & S 9TH ST	Schools; Bus Stop	$0	$38,000	$0	$0	$0	$0	$0	1		$38,000	139	$1,953,243
N 11TH ST & 6TH AVE N	Schools; Bus Stop	$0	$18,000	$0	$0	$0	$0	$0	1		$18,000	140	$1,971,243
10TH AVE S & S 25TH ST	Schools	$0	$24,000	$0	$0	$0	$0	$0	1		$24,000	141	$1,995,243
10TH AVE S & S 28TH ST	Schools	$0	$13,000	$0	$0	$0	$0	$0	1		$13,000	142	$2,008,243
S 16TH ST & N 16TH ST & CENTRAL AVE	Schools; Shopping malls, supermarkets and strip retail centers	$0	$1,000	$0	$0	$0	$0	$0	1		$1,000	143	$2,009,243
8TH AVE S & S 18TH ST	Schools	$0	$0	$0	$0	$0	$0	$0	1		$0	144	$2,009,243
N 15TH ST & 3RD AVE N	Schools	$0	$42,000	$0	$0	$0	$0	$0	1		$42,000	145	$2,051,243
9 1/2 AVE S & S 22ND ST	Schools	$0	$14,000	$0	$0	$0	$0	$0	1		$14,000	146	$2,065,243
3RD AVE S & S 12TH ST	Schools; Bus Stop; CBD	$0	$25,000	$0	$0	$0	$0	$0	1		$25,000	147	$2,090,243

Table B-1: City of Fort Dodge Program Review - Implementation Plan													
Location	Land Use	Sidewalk Remediation Cost	Pedestrian Ramp Remediation Cost	Bus Stop Remediation Cost	Traffic Signal Remediation Cost	Crosswalk Remediation Cost	Railroad Crossing Remediation Cost	Barrier Remediation Cost	Priority	CIP Project	Total Cost	Rank	Running Total Cost
N 13TH ST & RATHERMEL DR & 17TH AVE N	Schools; Bus Stop	$0	$18,000	$0	$0	$0	$0	$0	1		$18,000	148	$2,108,243
S 22ND ST & 7TH AVE S	Schools; Industrial	$0	$24,000	$0	$0	$0	$0	$0	1		$24,000	149	$2,132,243
TRITON PLAZA	Schools	$0	$2,000	$0	$0	$0	$0	$0	1		$2,000	150	$2,134,243
10TH AVE N & KRAMME DR	Schools; Housing complexes, including apartments; Public Housing and Homeless Shelters	$0	$31,000	$0	$0	$0	$0	$0	1		$31,000	151	$2,165,243
1ST AVE S & S 12TH ST	Schools; CBD	$0	$0	$0	$0	$0	$0	$0	1		$0	152	$2,165,243
N 29TH ST & 18TH AVE N	Schools	$0	$44,000	$0	$0	$0	$0	$0	1		$44,000	153	$2,209,243
1ST AVE N & N 20TH ST	Schools	$0	$21,000	$0	$0	$0	$0	$0	1		$21,000	154	$2,230,243
9TH AVE S & S 25TH ST	Schools; Hospitals, Health Clinics, and Medical Facilities (Public and Private)	$0	$31,000	$0	$0	$0	$0	$0	1		$31,000	155	$2,261,243
14TH AVE N & N 26TH ST	Schools	$0	$12,000	$0	$0	$0	$0	$0	1		$12,000	156	$2,273,243
N 18TH ST & S 18TH ST & CENTRAL AVE	Schools; Hospitals, Health Clinics, and Medical Facilities (Public and Private)	$0	$3,000	$0	$0	$0	$0	$0	1		$3,000	157	$2,276,243
CENTRAL AVE & S 5TH ST	Schools; CBD; Libraries; Parks	$0	$24,000	$0	$0	$0	$0	$0	1	Main Street Streetscape 3rd St - 6th St	$24,000	158	$2,300,243
2ND AVE N & N 12TH ST	Schools; Bus Stop; CBD; Hospitals, Health Clinics, and Medical Facilities (Public and Private); Public Housing and Homeless Shelters	$0	$34,000	$0	$0	$0	$0	$0	1		$34,000	159	$2,334,243
DODGER DR & N 32ND ST & 5TH AVE N	Schools	$0	$0	$0	$0	$0	$0	$0	1		$0	160	$2,334,243
S 16TH ST & 2ND AVE S	Schools	$0	$0	$0	$0	$0	$0	$0	1		$0	161	$2,334,243
5TH AVE N & N 14TH ST	Schools	$0	$0	$0	$0	$0	$0	$0	1		$0	162	$2,334,243
N 19TH ST & 6TH AVE N	Schools	$0	$26,000	$0	$0	$0	$0	$0	1		$26,000	163	$2,360,243
12TH AVE S & OLESON PARK AVE & S 18TH ST	Schools; Parks	$0	$12,000	$0	$0	$0	$0	$0	1		$12,000	164	$2,372,243
3RD AVE S & S 4TH ST	Schools	$0	$24,000	$0	$0	$0	$0	$0	1		$24,000	165	$2,396,243
NORTHRUP PL & 8TH AVE S	Schools	$0	$1,000	$0	$0	$0	$0	$0	1		$1,000	166	$2,397,243
19TH AVE N & N 23RD ST	Schools	$0	$42,000	$0	$0	$0	$0	$0	1		$42,000	167	$2,439,243
2ND AVE S & S 19TH ST	Schools	$0	$0	$0	$0	$0	$0	$0	1		$0	168	$2,439,243
ELMHURST AVE & N 22ND ST	Schools	$0	$12,000	$0	$0	$0	$0	$0	1		$12,000	169	$2,451,243
KNOLLCREST DR & 12TH AVE N	Schools; Bus Stop	$0	$31,000	$0	$0	$0	$0	$0	1		$31,000	170	$2,482,243
14TH AVE N & N 14TH ST	Schools	$0	$30,000	$0	$0	$0	$0	$0	1		$30,000	171	$2,512,243
4TH AVE N & N 8TH ST	Schools; Public Housing and Homeless Shelters	$0	$18,000	$0	$0	$0	$0	$0	1		$18,000	172	$2,530,243
5TH AVE N & N 20TH ST	Schools	$0	$8,000	$0	$0	$0	$0	$0	1		$8,000	173	$2,538,243
N 15TH ST & 2ND AVE N	Schools; Hospitals, Health Clinics, and Medical Facilities (Public and Private); Shopping malls, supermarkets and strip retail centers	$0	$24,000	$0	$0	$0	$0	$0	1		$24,000	174	$2,562,243
S 14TH ST & 5TH AVE S	Schools	$0	$28,000	$0	$0	$0	$0	$0	1		$28,000	175	$2,590,243
5TH AVE N & N 17TH ST	Schools	$0	$36,000	$0	$0	$0	$0	$0	1		$36,000	176	$2,626,243
N 31ST ST & 13TH AVE N	Schools	$0	$18,000	$0	$0	$0	$0	$0	1		$18,000	177	$2,644,243
S 4TH ST & CENTRAL AVE	Schools; CBD	$0	$6,000	$0	$0	$0	$0	$0	1	Main Street Streetscape 3rd St - 6th St	$6,000	178	$2,650,243
WRAYWOOD DR & 16TH AVE N	Schools	$0	$12,000	$0	$0	$0	$0	$0	1		$12,000	179	$2,662,243
S 24TH ST & 13TH AVE S	Schools	$0	$0	$0	$0	$0	$0	$0	1		$0	180	$2,662,243
3RD AVE S & S 13TH ST	Schools	$0	$0	$0	$0	$0	$0	$0	1		$0	181	$2,662,243
4TH AVE S & S 13TH ST	Schools	$0	$0	$0	$0	$0	$0	$0	1		$0	182	$2,662,243

Table B-1: City of Fort Dodge Program Review - Implementation Plan

Location	Land Use	Sidewalk Remediation Cost	Pedestrian Ramp Remediation Cost	Bus Stop Remediation Cost	Traffic Signal Remediation Cost	Crosswalk Remediation Cost	Railroad Crossing Remediation Cost	Barrier Remediation Cost	Priority	CIP Project	Total Cost	Rank	Running Total Cost
N 24TH ST & N 23RD ST & 10TH AVE N	Schools	$0	$0	$0	$0	$0	$0	$0	1		$0	183	$2,662,243
14TH AVE S & S 23RD ST	Schools	$0	$9,000	$0	$0	$0	$0	$0	1		$9,000	184	$2,671,243
AVE O	Schools; Housing complexes, including apartments	$0	$0	$0	$0	$0	$0	$0	1		$0	185	$2,671,243
14TH AVE N & WILLIAMS DR	Schools; Bus Stop	$0	$21,000	$0	$0	$0	$0	$0	1		$21,000	186	$2,692,243
N 9TH ST & 4TH AVE N	Schools	$0	$10,000	$0	$0	$0	$0	$0	1		$10,000	187	$2,702,243
N 19TH ST & 10TH AVE N	Schools; Parks	$0	$7,000	$0	$0	$0	$0	$0	1		$7,000	188	$2,709,243
6TH AVE N	Schools	$0	$0	$0	$0	$0	$0	$0	1		$0	189	$2,709,243
S 16TH ST & 1ST AVE S	Schools; Bus Stop	$0	$0	$0	$0	$0	$0	$0	1		$0	190	$2,709,243
AVE E & D ST	Schools	$0	$12,000	$0	$0	$0	$0	$0	1		$12,000	191	$2,721,243
1ST AVE S & S 4TH ST	Schools; CBD; Churches and Places of Worship	$0	$42,000	$0	$0	$0	$0	$0	1	Main Street Streetscape 3rd St - 6th St	$42,000	192	$2,763,243
10TH AVE S & S 20TH ST	Schools	$0	$38,000	$0	$0	$0	$0	$0	1		$38,000	193	$2,801,243
10TH AVE SW	Schools; Parks	$0	$1,000	$0	$0	$0	$0	$0	1		$1,000	194	$2,802,243
S 9TH ST & 2ND AVE S	Schools; CBD; Churches and Places of Worship	$0	$0	$0	$0	$0	$0	$0	1		$0	195	$2,802,243
9 1/2 AVE S & S 23RD ST	Schools	$0	$48,000	$0	$0	$0	$0	$0	1		$48,000	196	$2,850,243
N 15TH ST & 4TH AVE N	Schools	$0	$36,000	$0	$0	$0	$0	$0	1		$36,000	197	$2,886,243
1ST AVE S & S 6TH ST & 2ND AVE S & 6TH ST	Schools; Bus Stop; CBD; Government Facilities	$0	$0	$0	$0	$0	$0	$0	1	Main Street Streetscape 3rd St - 6th St	$0	198	$2,886,243
S 8TH ST & 2ND AVE S	Schools; CBD; Government Facilities	$0	$6,000	$0	$0	$0	$0	$0	1		$6,000	199	$2,892,243
1ST AVE S & S 7TH ST	Schools; CBD; Government Facilities	$0	$0	$0	$0	$0	$0	$0	1	Main Street Streetscape 6th St - 9th St	$0	200	$2,892,243
2ND AVE N & MARTIN LUTHER KING DR	Schools	$0	$12,000	$0	$0	$0	$0	$0	1		$12,000	201	$2,904,243
8TH AVE N & N 25TH ST	Schools	$0	$0	$0	$0	$0	$0	$0	1		$0	202	$2,904,243
N 16TH ST & 3RD AVE N	Schools	$0	$36,000	$0	$0	$0	$0	$0	1		$36,000	203	$2,940,243
S 12TH ST & N 12TH ST & CENTRAL AVE & CENTRAL AVE CONNECTOR	Schools; CBD; Hospitals, Health Clinics, and Medical Facilities (Public and Private)	$0	$8,000	$0	$0	$0	$0	$0	1	Main Street Streetscape 9th St - 12th St	$8,000	204	$2,948,243
3RD AVE N & N 8TH ST	Schools	$0	$23,000	$0	$0	$0	$0	$0	1		$23,000	205	$2,971,243
1ST AVE N & N 19TH ST	Schools; Shopping malls, supermarkets and strip retail centers	$0	$26,000	$0	$0	$0	$0	$0	1		$26,000	206	$2,997,243
1ST AVE N & N 14TH ST	Schools	$0	$22,000	$0	$0	$0	$0	$0	1		$22,000	207	$3,019,243
16TH AVE N & WILLIAMS DR	Schools	$0	$36,000	$0	$0	$0	$0	$0	1		$36,000	208	$3,055,243
15TH AVE N & KRAMME DR	Schools	$0	$30,000	$0	$0	$0	$0	$0	1		$30,000	209	$3,085,243
4TH AVE S & COMMERCE ST & S 5TH ST	Schools	$0	$0	$0	$0	$0	$0	$0	1		$0	210	$3,085,243
3RD AVE N & N 7TH ST	Schools; Public Housing and Homeless Shelters	$0	$22,000	$0	$0	$0	$0	$0	1		$22,000	211	$3,107,243
N 31ST ST & 12TH AVE N	Schools	$0	$21,000	$0	$0	$0	$0	$0	1		$21,000	212	$3,128,243
7TH AVE N & N 22ND ST	Schools; Housing complexes, including apartments	$0	$14,000	$0	$0	$0	$0	$0	1		$14,000	213	$3,142,243
N 24TH PL & 14TH AVE N	Schools	$0	$30,000	$0	$0	$0	$0	$0	1		$30,000	214	$3,172,243
S 20TH ST & 11TH AVE S	Schools	$0	$13,000	$0	$0	$0	$0	$0	1		$13,000	215	$3,185,243
2ND AVE N & N 14TH ST	Schools	$0	$7,000	$0	$0	$0	$0	$0	1		$7,000	216	$3,192,243
11TH AVE S & S 17TH ST	Schools	$0	$21,000	$0	$0	$0	$0	$0	1		$21,000	217	$3,213,243
N 18TH ST & 3RD AVE N	Schools	$0	$21,000	$0	$0	$0	$0	$0	1		$21,000	218	$3,234,243
12TH AVE S & S 17TH ST	Schools; Parks	$0	$31,000	$0	$0	$0	$0	$0	1		$31,000	219	$3,265,243
7TH AVE N & N 9TH ST	Schools	$0	$13,000	$0	$0	$0	$0	$0	1		$13,000	220	$3,278,243
7TH AVE N & N 14TH ST	Schools	$0	$8,000	$0	$0	$0	$0	$0	1		$8,000	221	$3,286,243
4TH AVE N & N 12TH ST	Schools	$0	$5,000	$0	$0	$0	$0	$0	1		$5,000	222	$3,291,243

Table B-1: City of Fort Dodge Program Review - Implementation Plan													
Location	Land Use	Sidewalk Remediation Cost	Pedestrian Ramp Remediation Cost	Bus Stop Remediation Cost	Traffic Signal Remediation Cost	Crosswalk Remediation Cost	Railroad Crossing Remediation Cost	Barrier Remediation Cost	Priority	CIP Project	Total Cost	Rank	Running Total Cost
7TH AVE N & N 19TH ST	Schools	$0	$24,000	$0	$0	$0	$0	$0	1		$24,000	223	$3,315,243
3RD AVE S & S 15TH ST	Schools; Bus Stop	$0	$0	$0	$0	$0	$0	$0	1		$0	224	$3,315,243
N 17TH ST & 3RD AVE N	Schools	$0	$36,000	$0	$0	$0	$0	$0	1		$36,000	225	$3,351,243
N 17TH ST & 6TH AVE N	Schools	$0	$0	$0	$0	$0	$0	$0	1		$0	226	$3,351,243
S 9TH ST & 1ST AVE S	Schools; CBD; Government Facilities; Housing complexes, including apartments	$0	$0	$0	$0	$0	$0	$0	1	Main Street Streetscape 6th St - 9th St	$0	227	$3,351,243
N 12TH ST & 6TH AVE N	Schools	$0	$28,000	$0	$0	$0	$0	$0	1		$28,000	228	$3,379,243
N 29TH ST & 15TH AVE N	Schools	$0	$30,000	$0	$0	$0	$0	$0	1		$30,000	229	$3,409,243
19TH AVE N & N 30TH CT	Schools	$0	$31,000	$0	$0	$0	$0	$0	1		$31,000	230	$3,440,243
9 1/2 AVE S & S 25TH ST	Schools	$0	$25,000	$0	$0	$0	$0	$0	1		$25,000	231	$3,465,243
7TH AVE N & ELIZABETH AVE	Schools	$0	$6,000	$0	$0	$0	$0	$0	1		$6,000	232	$3,471,243
N 21ST ST & 10TH AVE N	Schools; Parks	$0	$26,000	$0	$0	$0	$0	$0	1		$26,000	233	$3,497,243
S 13TH ST & 2ND AVE S	Schools; Churches and Places of Worship	$0	$30,000	$0	$0	$0	$0	$0	1		$30,000	234	$3,527,243
4TH AVE N & N 14TH ST	Schools; Churches and Places of Worship	$0	$0	$0	$0	$0	$0	$0	1		$0	235	$3,527,243
N 15TH ST & 7TH AVE N	Schools	$0	$23,000	$0	$0	$0	$0	$0	1	N 15th St Corridor Phase 3: 6th A N - 20th A N	$23,000	236	$3,550,243
8TH AVE N & N 14TH ST	Schools	$0	$12,000	$0	$0	$0	$0	$0	1		$12,000	237	$3,562,243
KNOLLCREST DR & 10TH AVE N	Schools; Parks	$0	$0	$0	$0	$0	$0	$0	1		$0	238	$3,562,243
9TH AVE S & S 28TH ST	Schools; Hospitals, Health Clinics, and Medical Facilities (Public and Private)	$0	$8,000	$0	$0	$0	$0	$0	1		$8,000	239	$3,570,243
1ST AVE N & N 17TH ST	Schools	$0	$48,000	$0	$0	$0	$0	$0	1		$48,000	240	$3,618,243
S 13TH ST & 1ST AVE S	Schools; CBD; Industrial	$0	$12,000	$0	$0	$0	$0	$0	1		$12,000	241	$3,630,243
N 22ND ST & 2 1/2 AVE N	Schools	$0	$0	$0	$0	$0	$0	$0	1	N 21st St and 2 1/2 Ave N Reconstruction	$0	242	$3,630,243
7TH AVE N & FOREST AVE	Schools	$0	$31,000	$0	$0	$0	$0	$0	1		$31,000	243	$3,661,243
8TH AVE N & N 22ND ST	Schools; Housing complexes, including apartments	$0	$0	$0	$0	$0	$0	$0	1		$0	244	$3,661,243
S 20TH ST & 8TH AVE S	Schools	$0	$1,000	$0	$0	$0	$0	$0	1		$1,000	245	$3,662,243
N 29TH ST & 20TH AVE N	Schools	$0	$18,000	$0	$0	$0	$0	$0	1		$18,000	246	$3,680,243
2ND AVE S & S 6TH ST & 1ST AVE S	Schools; CBD	$0	$0	$0	$0	$0	$0	$0	1		$0	247	$3,680,243
C ST & AVE E	Schools	$0	$12,000	$0	$0	$0	$0	$0	1		$12,000	248	$3,692,243
C ST & AVE F	Schools	$0	$0	$0	$0	$0	$0	$0	1		$0	249	$3,692,243
N 15TH ST & 9TH AVE N	Schools; Bus Stop	$0	$36,000	$0	$0	$0	$0	$0	1	N 15th St Corridor Phase 3: 6th A N - 20th A N	$36,000	250	$3,728,243
N 15TH ST & 8TH AVE N	Schools	$0	$30,000	$0	$0	$0	$0	$0	1	N 15th St Corridor Phase 3: 6th A N - 20th A N	$30,000	251	$3,758,243
11TH AVE S & S 21ST ST	Schools; Churches and Places of Worship	$0	$10,000	$0	$0	$0	$0	$0	1		$10,000	252	$3,768,243
20TH AVE N & N 30TH CT	Schools	$0	$16,000	$0	$0	$0	$0	$0	1		$16,000	253	$3,784,243
9TH AVE S & S 22ND ST	Schools; Churches and Places of Worship	$0	$36,000	$0	$0	$0	$0	$0	1		$36,000	254	$3,820,243
N 28TH ST & 6TH AVE N	Schools; Bus Stop; Housing complexes, including apartments	$0	$25,000	$0	$0	$0	$0	$0	1		$25,000	255	$3,845,243
10TH AVE S & S 18TH ST	Schools	$0	$0	$0	$0	$0	$0	$0	1		$0	256	$3,845,243
N 27TH ST & 3RD AVE N	Schools	$0	$14,000	$0	$0	$0	$0	$0	1		$14,000	257	$3,859,243
20TH AVE N & N 14TH ST	Schools	$0	$0	$0	$0	$0	$0	$0	1		$0	258	$3,859,243
N 25TH ST & 6TH AVE N	Schools; Hospitals, Health Clinics, and Medical Facilities (Public and Private)	$0	$14,000	$0	$0	$0	$0	$0	1		$14,000	259	$3,873,243

Table B-1: City of Fort Dodge Program Review - Implementation Plan													
Location	Land Use	Sidewalk Remediation Cost	Pedestrian Ramp Remediation Cost	Bus Stop Remediation Cost	Traffic Signal Remediation Cost	Crosswalk Remediation Cost	Railroad Crossing Remediation Cost	Barrier Remediation Cost	Priority	CIP Project	Total Cost	Rank	Running Total Cost
19TH AVE N & N 26TH ST	Schools	$0	$24,000	$0	$0	$0	$0	$0	1		$24,000	260	$3,897,243
N 6TH ST & 1ST AVE N	Schools; CBD	$0	$0	$0	$0	$0	$0	$0	1	Main Street Streetscape 3rd St - 6th St	$0	261	$3,897,243
DODGER DR & N 29TH ST & 6TH AVE N	Schools; Bus Stop; Housing complexes, including apartments	$0	$2,000	$0	$0	$0	$0	$0	1		$2,000	262	$3,899,243
N 26TH ST & 17TH AVE N	Schools	$0	$12,000	$0	$0	$0	$0	$0	1		$12,000	263	$3,911,243
AVE E & G ST & F ST	Schools	$0	$6,000	$0	$0	$0	$0	$0	1		$6,000	264	$3,917,243
N 24TH ST & 18TH AVE N	Schools	$0	$31,000	$0	$0	$0	$0	$0	1		$31,000	265	$3,948,243
9TH AVE S & S 27TH ST	Schools; Hospitals, Health Clinics, and Medical Facilities (Public and Private)	$0	$18,000	$0	$0	$0	$0	$0	1		$18,000	266	$3,966,243
AVE C & I ST	Schools	$0	$43,000	$0	$0	$0	$0	$0	1		$43,000	267	$4,009,243
2ND AVE N & N 21ST ST	Schools	$0	$0	$0	$0	$0	$0	$0	1	N 21st St and 2 1/2 Ave N Reconstruction	$0	268	$4,009,243
7TH AVE N & N 18TH ST	Schools	$0	$16,000	$0	$0	$0	$0	$0	1		$16,000	269	$4,025,243
16TH AVE N & N 11TH ST	Schools	$0	$36,000	$0	$0	$0	$0	$0	1		$36,000	270	$4,061,243
N 24TH PL & 10TH AVE N	Schools	$0	$6,000	$0	$0	$0	$0	$0	1		$6,000	271	$4,067,243
12TH AVE S & S 24TH ST	Schools	$0	$26,000	$0	$0	$0	$0	$0	1		$26,000	272	$4,093,243
8TH AVE S & S 25TH ST	Schools	$0	$0	$0	$0	$0	$0	$0	1		$0	273	$4,093,243
S 13TH ST & CENTRAL AVE CONNECTOR & N 13TH ST & CENTRAL AVE	Schools; CBD	$0	$4,000	$0	$0	$0	$0	$0	1		$4,000	274	$4,097,243
N 23RD ST & 16TH AVE N	Schools	$0	$14,000	$0	$0	$0	$0	$0	1		$14,000	275	$4,111,243
13TH AVE N & WILLIAMS DR	Schools	$0	$1,000	$0	$0	$0	$0	$0	1		$1,000	276	$4,112,243
S 23RD ST & 13TH AVE S	Schools	$0	$0	$0	$0	$0	$0	$0	1		$0	277	$4,112,243
S 14TH ST & 2ND AVE S	Schools	$0	$0	$0	$0	$0	$0	$0	1		$0	278	$4,112,243
NORTHRUP PL & HIGHLAND PARK AVE & 8TH AVE S & S 19TH ST	Schools	$0	$18,000	$0	$0	$0	$0	$0	1	Highland Park Bridge Replacement	$18,000	279	$4,130,243
N 12TH ST & CENTRAL AVE & CENTRAL AVE CONNECTOR	Schools; Hospitals, Health Clinics, and Medical Facilities (Public and Private)	$0	$6,000	$0	$0	$0	$0	$0	1	Main Street Streetscape 9th St - 12th St	$6,000	280	$4,136,243
1ST AVE S & 1ST AVE S CONNECTOR & S 12TH ST	Schools; CBD; Shopping malls, supermarkets and strip retail centers	$0	$1,000	$0	$0	$0	$0	$0	1		$1,000	281	$4,137,243
5TH AVE N & N 10TH ST	Schools; Housing complexes, including apartments	$0	$42,000	$0	$0	$0	$0	$0	1		$42,000	282	$4,179,243
8TH AVE S & S 24TH ST	Schools	$0	$2,000	$0	$0	$0	$0	$0	1		$2,000	283	$4,181,243
N 19TH ST & 4TH AVE N	Schools	$0	$7,000	$0	$0	$0	$0	$0	1		$7,000	284	$4,188,243
2ND AVE S & S 6TH ST & 1ST AVE S & 6TH ST	Schools; CBD	$0	$0	$0	$0	$0	$0	$0	1		$0	285	$4,188,243
N 14TH ST & 6TH AVE N	Schools	$0	$8,000	$0	$0	$0	$0	$0	1		$8,000	286	$4,196,243
WRAYWOOD DR & 17TH AVE N & WILLIAMS DR	Schools	$0	$36,000	$0	$0	$0	$0	$0	1		$36,000	287	$4,232,243
N 16TH ST & 4TH AVE N	Schools	$0	$48,000	$0	$0	$0	$0	$0	1		$48,000	288	$4,280,243
12TH AVE S & S 23RD ST	Schools	$0	$1,000	$0	$0	$0	$0	$0	1		$1,000	289	$4,281,243
16TH AVE N & KRAMME DR	Schools	$0	$24,000	$0	$0	$0	$0	$0	1		$24,000	290	$4,305,243
4TH AVE S & S 17TH ST	Schools	$0	$0	$0	$0	$0	$0	$0	1		$0	291	$4,305,243
N 22ND ST & 6TH AVE N	Schools; Housing complexes, including apartments; Industrial	$0	$0	$0	$0	$0	$0	$0	1		$0	292	$4,305,243
N 27TH ST & 18TH AVE N	Schools; Bus Stop	$0	$24,000	$0	$0	$0	$0	$0	1		$24,000	293	$4,329,243
14TH AVE N & N 29TH ST	Schools	$0	$31,000	$0	$0	$0	$0	$0	1		$31,000	294	$4,360,243
N 11TH ST	Schools	$0	$1,000	$0	$0	$0	$0	$0	1		$1,000	295	$4,361,243
MERIWEATHER DR	Schools; Parks	$0	$0	$0	$0	$0	$0	$0	1		$0	296	$4,361,243
14TH AVE N & N 31ST ST	Schools	$0	$23,000	$0	$0	$0	$0	$0	1		$23,000	297	$4,384,243
1ST AVE S & S 18TH ST	Schools	$0	$12,000	$0	$0	$0	$0	$0	1		$12,000	298	$4,396,243

Table B-1: City of Fort Dodge Program Review - Implementation Plan

Location	Land Use	Sidewalk Remediation Cost	Pedestrian Ramp Remediation Cost	Bus Stop Remediation Cost	Traffic Signal Remediation Cost	Crosswalk Remediation Cost	Railroad Crossing Remediation Cost	Barrier Remediation Cost	Priority	CIP Project	Total Cost	Rank	Running Total Cost
5TH AVE N & N 6TH ST & N 7TH ST	Schools	$0	$21,000	$0	$0	$0	$0	$0	1		$21,000	299	$4,417,243
N 26TH ST & 16TH AVE N	Schools	$0	$24,000	$0	$0	$0	$0	$0	1		$24,000	300	$4,441,243
10TH AVE N & N 25TH ST	Schools; Polling Locations	$0	$2,000	$0	$0	$0	$0	$0	1		$2,000	301	$4,443,243
N 12TH ST	Schools	$0	$7,000	$0	$0	$0	$0	$0	1		$7,000	302	$4,450,243
30TH CT CIR & N 30TH CT	Schools	$0	$16,000	$0	$0	$0	$0	$0	1		$16,000	303	$4,466,243
4TH AVE S & S 12TH ST	Schools	$0	$30,000	$0	$0	$0	$0	$0	1		$30,000	304	$4,496,243
COMMERCE ST & S 4TH ST & 3RD AVE S	Schools	$0	$6,000	$0	$0	$0	$0	$0	1		$6,000	305	$4,502,243
K ST & AVE B	Schools	$0	$21,000	$0	$0	$0	$0	$0	1		$21,000	306	$4,523,243
K ST & AVE C	Schools	$0	$21,000	$0	$0	$0	$0	$0	1		$21,000	307	$4,544,243
S 24TH ST & 11TH AVE S	Schools	$0	$18,000	$0	$0	$0	$0	$0	1		$18,000	308	$4,562,243
N 5TH ST & HASKELL ST	Schools	$0	$12,000	$0	$0	$0	$0	$0	1		$12,000	309	$4,574,243
S 20TH ST & S 19TH ST & 13TH AVE S	Schools	$0	$8,000	$0	$0	$0	$0	$0	1		$8,000	310	$4,582,243
N 27TH ST & 6TH AVE N	Schools; Housing complexes, including apartments	$0	$3,000	$0	$0	$0	$0	$0	1		$3,000	311	$4,585,243
FT MUSEUM RD & KENYON RD	Schools; Churches and Places of Worship; Hospitals, Health Clinics, and Medical Facilities (Public and Private)	$0	$0	$0	$0	$0	$0	$0	1		$0	312	$4,585,243
3RD AVE S & S 5TH ST	Schools	$0	$0	$0	$0	$0	$0	$0	1		$0	313	$4,585,243
8 1/2 AVE N & N 18TH ST	Schools	$0	$8,000	$0	$0	$0	$0	$0	1		$8,000	314	$4,593,243
HIGHLAND PARK AVE & S 25TH ST	Schools; Hospitals, Health Clinics, and Medical Facilities (Public and Private)	$0	$24,000	$0	$0	$0	$0	$0	1		$24,000	315	$4,617,243
19TH AVE N & GRANDVIEW DR	Schools	$0	$8,000	$0	$0	$0	$0	$0	1		$8,000	316	$4,625,243
1ST AVE N & N 9TH ST	Schools; CBD; Public Housing and Homeless Shelters	$0	$21,000	$0	$0	$0	$0	$0	1	Main Street Streetscape 6th St - 9th St	$21,000	317	$4,646,243
WRAYWOOD DR & N 11TH ST	Schools	$0	$6,000	$0	$0	$0	$0	$0	1		$6,000	318	$4,652,243
7TH AVE N & N 12TH ST	Schools	$0	$6,000	$0	$0	$0	$0	$0	1		$6,000	319	$4,658,243
7TH AVE N & N 25TH ST	Schools; Hospitals, Health Clinics, and Medical Facilities (Public and Private)	$0	$8,000	$0	$0	$0	$0	$0	1		$8,000	320	$4,666,243
2ND AVE N & N 11TH ST	Schools; Bus Stop; CBD; Public Housing and Homeless Shelters	$0	$38,000	$0	$0	$0	$0	$0	1		$38,000	321	$4,704,243
5TH AVE S	Schools; Bus Stop	$0	$0	$0	$0	$0	$0	$0	1		$0	322	$4,704,243
S 15TH ST & 1ST AVE S	Schools; CBD; Shopping malls, supermarkets and strip retail centers	$0	$0	$0	$0	$0	$0	$0	1		$0	323	$4,704,243
10TH AVE S & S 32ND ST	Schools	$0	$0	$0	$0	$0	$0	$0	1		$0	324	$4,704,243
HIGHLAND PARK AVE & S 24TH ST	Schools	$0	$24,000	$0	$0	$0	$0	$0	1		$24,000	325	$4,728,243
S 26TH ST & 13TH AVE S	Schools	$0	$18,000	$0	$0	$0	$0	$0	1		$18,000	326	$4,746,243
N 32ND ST	Schools	$0	$0	$0	$0	$0	$0	$0	1		$0	327	$4,746,243
10TH AVE S & S 27TH ST	Schools	$0	$30,000	$0	$0	$0	$0	$0	1		$30,000	328	$4,776,243
S 15TH ST & 6TH AVE S	Schools	$0	$26,000	$0	$0	$0	$0	$0	1		$26,000	329	$4,802,243
1ST AVE N & N 13TH ST	Schools; CBD; Churches and Places of Worship	$0	$48,000	$0	$0	$0	$0	$0	1		$48,000	330	$4,850,243
N 6TH ST & S 6TH ST & CENTRAL AVE	Schools; CBD	$0	$13,000	$0	$0	$0	$0	$0	1	Main Street Streetscape 3rd St - 6th St; Main Street Streetscape 6th St - 9th St	$13,000	331	$4,863,243
S 16TH ST & 9TH AVE S	Schools	$0	$12,000	$0	$0	$0	$0	$0	1		$12,000	332	$4,875,243
16TH AVE N & N 25TH ST	Schools	$0	$13,000	$0	$0	$0	$0	$0	1		$13,000	333	$4,888,243
11TH AVE S & S 23RD ST	Schools	$0	$19,000	$0	$0	$0	$0	$0	1		$19,000	334	$4,907,243
N 20TH ST & 4TH AVE N	Schools	$0	$37,000	$0	$0	$0	$0	$0	1		$37,000	335	$4,944,243
CENTRAL AVE	Schools; CBD; Parks	$0	$17,000	$0	$0	$0	$0	$0	1	Main Street Streetscape 3rd St - 6th St	$17,000	336	$4,961,243

Table B-1: City of Fort Dodge Program Review - Implementation Plan													
Location	Land Use	Sidewalk Remediation Cost	Pedestrian Ramp Remediation Cost	Bus Stop Remediation Cost	Traffic Signal Remediation Cost	Crosswalk Remediation Cost	Railroad Crossing Remediation Cost	Barrier Remediation Cost	Priority	CIP Project	Total Cost	Rank	Running Total Cost
10TH AVE SW & 9TH AVE SW	Schools; Churches and Places of Worship	$0	$13,000	$0	$0	$0	$0	$0	1		$13,000	337	$4,974,243
AVE G & E ST	Schools	$0	$6,000	$0	$0	$0	$0	$0	1		$6,000	338	$4,980,243
5TH AVE N & N 11TH ST	Schools; Housing complexes, including apartments	$0	$36,000	$0	$0	$0	$0	$0	1		$36,000	339	$5,016,243
S 12TH ST & E KENYON RD & 5TH AVE S	Schools	$0	$8,000	$0	$0	$0	$0	$0	1		$8,000	340	$5,024,243
14TH AVE N & N 23RD ST	Schools	$0	$0	$0	$0	$0	$0	$0	1		$0	341	$5,024,243
8TH AVE N & N 16TH ST	Schools	$0	$0	$0	$0	$0	$0	$0	1		$0	342	$5,024,243
7TH AVE N & N 20TH ST	Schools	$0	$14,000	$0	$0	$0	$0	$0	1		$14,000	343	$5,038,243
8TH AVE N & N 21ST ST	Schools	$0	$6,000	$0	$0	$0	$0	$0	1		$6,000	344	$5,044,243
3RD AVE S & S 4TH ST & COMMERCE ST	Schools	$0	$6,000	$0	$0	$0	$0	$0	1		$6,000	345	$5,050,243
S 13TH ST & CENTRAL AVE & N 13TH ST	Schools; Bus Stop; CBD	$0	$2,000	$0	$0	$0	$0	$0	1		$2,000	346	$5,052,243
N 10TH ST & 3RD AVE N	Schools	$0	$36,000	$0	$0	$0	$0	$0	1		$36,000	347	$5,088,243
AVE D & D ST	Schools	$0	$26,000	$0	$0	$0	$0	$0	1		$26,000	348	$5,114,243
7TH AVE N & N 13TH ST	Schools	$0	$10,000	$0	$0	$0	$0	$0	1		$10,000	349	$5,124,243
S 27TH ST & 11TH AVE S	Schools; Polling Locations	$0	$12,000	$0	$0	$0	$0	$0	1		$12,000	350	$5,136,243
1ST AVE N & N 12TH ST	Schools; CBD; Public Housing and Homeless Shelters	$0	$49,000	$0	$0	$0	$0	$0	1		$49,000	351	$5,185,243
N 31ST PL & 10TH AVE N	Schools	$0	$2,000	$0	$0	$0	$0	$0	1		$2,000	352	$5,187,243
S 20TH ST & 2ND AVE S	Schools	$0	$0	$0	$0	$0	$0	$0	1		$0	353	$5,187,243
S 20TH ST & HIGHLAND PARK AVE	Schools	$0	$19,000	$0	$0	$0	$0	$0	1	Highland Park Bridge Replacement	$19,000	354	$5,206,243
S 32ND ST & 11TH AVE S	Schools	$0	$0	$0	$0	$0	$0	$0	1		$0	355	$5,206,243
S 21ST ST & S 19TH ST	Schools	$0	$12,000	$0	$0	$0	$0	$0	1		$12,000	356	$5,218,243
N 29TH ST & 12TH AVE N	Schools	$0	$18,000	$0	$0	$0	$0	$0	1		$18,000	357	$5,236,243
14TH AVE S & S 25TH ST	Schools	$0	$25,000	$0	$0	$0	$0	$0	1		$25,000	358	$5,261,243
9TH AVE S & S 20TH ST	Schools	$0	$23,000	$0	$0	$0	$0	$0	1		$23,000	359	$5,284,243
S 9TH ST & N 9TH ST & CENTRAL AVE	Schools; Bus Stop; CBD; Hospitals, Health Clinics, and Medical Facilities (Public and Private)	$0	$33,000	$0	$0	$0	$0	$0	1	Main Street Streetscape 6th St - 9th St; Main Street Streetscape 9th St - 12th St	$33,000	360	$5,317,243
S 20TH ST & 12TH AVE S	Schools	$0	$0	$0	$0	$0	$0	$0	1		$0	361	$5,317,243
9TH AVE S & S 24TH ST	Schools; Bus Stop	$0	$19,000	$0	$0	$0	$0	$0	1		$19,000	362	$5,336,243
N 29TH ST & 17TH AVE N	Schools	$0	$31,000	$0	$0	$0	$0	$0	1		$31,000	363	$5,367,243
2ND AVE N & N 25TH ST	Schools	$0	$0	$0	$0	$0	$0	$0	1		$0	364	$5,367,243
21ST AVE N & N 28TH ST	Schools	$0	$36,000	$0	$0	$0	$0	$0	1		$36,000	365	$5,403,243
S 15TH ST & 7TH AVE S	Schools	$0	$9,000	$0	$0	$0	$0	$0	1		$9,000	366	$5,412,243
N 23RD ST & 6TH AVE N	Schools; Hospitals, Health Clinics, and Medical Facilities (Public and Private); Housing complexes, including apartments	$0	$18,000	$0	$0	$0	$0	$0	1		$18,000	367	$5,430,243
9TH AVE S & S 26TH ST	Schools; Hospitals, Health Clinics, and Medical Facilities (Public and Private)	$0	$18,000	$0	$0	$0	$0	$0	1		$18,000	368	$5,448,243
FOREST AVE & 6TH AVE N	Schools	$0	$7,000	$0	$0	$0	$0	$0	1		$7,000	369	$5,455,243
2ND AVE N & N 22ND ST	Schools; Shopping malls, supermarkets and strip retail centers	$0	$20,000	$0	$0	$0	$0	$0	1		$20,000	370	$5,475,243
8TH AVE N & N 18TH ST	Schools	$0	$12,000	$0	$0	$0	$0	$0	1		$12,000	371	$5,487,243
10TH ST SW & 9TH AVE SW	Schools	$0	$24,000	$0	$0	$0	$0	$0	1		$24,000	372	$5,511,243
S 15TH ST & MASON MEMORIAL DR	Schools; Parks	$0	$2,000	$0	$0	$0	$0	$0	1		$2,000	373	$5,513,243
S 12TH ST & 1ST AVE S CONNECTOR & 1ST AVE S	Schools; CBD	$0	$0	$0	$0	$0	$0	$0	1		$0	374	$5,513,243
N 24TH PL & ELMHURST AVE	Schools	$0	$26,000	$0	$0	$0	$0	$0	1		$26,000	375	$5,539,243

Table B-1: City of Fort Dodge Program Review - Implementation Plan													
Location	Land Use	Sidewalk Remediation Cost	Pedestrian Ramp Remediation Cost	Bus Stop Remediation Cost	Traffic Signal Remediation Cost	Crosswalk Remediation Cost	Railroad Crossing Remediation Cost	Barrier Remediation Cost	Priority	CIP Project	Total Cost	Rank	Running Total Cost
8TH AVE S & S 21ST ST	Schools	$0	$24,000	$0	$0	$0	$0	$0	1		$24,000	376	$5,563,243
3RD AVE N & N 12TH ST	Schools	$0	$14,000	$0	$0	$0	$0	$0	1		$14,000	377	$5,577,243
WRAYWOOD DR & N 8TH ST	Schools	$0	$6,000	$0	$0	$0	$0	$0	1		$6,000	378	$5,583,243
15TH AVE N & N 30TH CT & 18TH AVE N	Schools	$0	$23,000	$0	$0	$0	$0	$0	1		$23,000	379	$5,606,243
8 1/2 AVE N & N 16TH ST & 8TH AVE N	Schools	$0	$0	$0	$0	$0	$0	$0	1		$0	380	$5,606,243
S 15TH ST & 5TH AVE S	Schools	$0	$25,000	$0	$0	$0	$0	$0	1		$25,000	381	$5,631,243
10TH AVE S & S 24TH ST	Schools	$0	$26,000	$0	$0	$0	$0	$0	1		$26,000	382	$5,657,243
2ND AVE S & S 3RD ST	Schools; CBD	$0	$24,000	$0	$0	$0	$0	$0	1		$24,000	383	$5,681,243
S 21ST ST & 13TH AVE S	Schools	$0	$9,000	$0	$0	$0	$0	$0	1		$9,000	384	$5,690,243
4TH AVE N & N 7TH ST	Schools	$0	$12,000	$0	$0	$0	$0	$0	1		$12,000	385	$5,702,243
N 27TH ST & N 26TH PL	Schools	$0	$12,000	$0	$0	$0	$0	$0	1		$12,000	386	$5,714,243
N 24TH ST & 10TH AVE N	Schools	$0	$0	$0	$0	$0	$0	$0	1		$0	387	$5,714,243
N 17TH ST & 4TH AVE N	Schools	$0	$36,000	$0	$0	$0	$0	$0	1		$36,000	388	$5,750,243
7TH ST SW & 9TH AVE SW & KENYON RD	Schools	$0	$0	$0	$0	$0	$0	$0	1		$0	389	$5,750,243
9TH AVE N & N 14TH ST	Schools	$0	$36,000	$0	$0	$0	$0	$0	1		$36,000	390	$5,786,243
N 32ND ST & N 32ND ST CONN & 10TH AVE N	Schools	$0	$0	$0	$0	$0	$0	$0	1		$0	391	$5,786,243
2ND AVE N & N 18TH ST	Schools	$0	$0	$0	$0	$0	$0	$0	1		$0	392	$5,786,243
S 12TH ST & 2ND AVE S	Schools	$0	$1,000	$0	$0	$0	$0	$0	1		$1,000	393	$5,787,243
N 16TH ST & 8 1/2 AVE N	Schools	$0	$2,000	$0	$0	$0	$0	$0	1		$2,000	394	$5,789,243
4TH AVE S & S 18TH ST	Schools	$0	$0	$0	$0	$0	$0	$0	1		$0	395	$5,789,243
N 15TH ST & 6TH AVE N	Schools	$0	$31,000	$0	$0	$0	$0	$0	1	N 15th St Corridor Phase 3: 6th A N - 20th A N	$31,000	396	$5,820,243
S 14TH ST & CENTRAL AVE & N 14TH ST	Schools; CBD; Churches and Places of Worship; Shopping malls, supermarkets and strip retail centers	$0	$11,000	$0	$0	$0	$0	$0	1		$11,000	397	$5,831,243
8TH AVE N & N 20TH ST	Schools	$0	$13,000	$0	$0	$0	$0	$0	1		$13,000	398	$5,844,243
N 31ST ST & 10TH AVE N	Schools	$0	$12,000	$0	$0	$0	$0	$0	1		$12,000	399	$5,856,243
S 20TH ST & 1ST AVE S	Schools; Bus Stop	$0	$31,000	$0	$0	$0	$0	$0	1	1st Ave S Bridge Repair (Veterans Bridge)	$31,000	400	$5,887,243
N 24TH ST & 8TH AVE N	Schools	$0	$12,000	$0	$0	$0	$0	$0	1		$12,000	401	$5,899,243
N 22ND ST & 10TH AVE N	Schools	$0	$8,000	$0	$0	$0	$0	$0	1		$8,000	402	$5,907,243
8TH AVE S & S 22ND ST	Schools; Bus Stop; Industrial	$0	$26,000	$0	$0	$0	$0	$0	1		$26,000	403	$5,933,243
S 20TH ST & 3RD AVE S	Schools	$0	$1,000	$0	$0	$0	$0	$0	1		$1,000	404	$5,934,243
4TH AVE N & N 26TH PL	Schools; Housing complexes, including apartments	$0	$48,000	$0	$0	$0	$0	$0	1		$48,000	405	$5,982,243
AVE C & D ST	Schools	$0	$12,000	$0	$0	$0	$0	$0	1		$12,000	406	$5,994,243
19TH AVE N & GREENBRIER DR	Schools	$0	$15,000	$0	$0	$0	$0	$0	1		$15,000	407	$6,009,243
3RD AVE N & N 26TH PL	Schools; Bus Stop	$0	$18,000	$0	$0	$0	$0	$0	1		$18,000	408	$6,027,243
10TH AVE SW & MASON MEMORIAL DR	Schools; Parks	$0	$1,000	$0	$0	$0	$0	$0	1		$1,000	409	$6,028,243
14TH AVE S & S 22ND ST	Schools; Bus Stop	$0	$42,000	$0	$0	$0	$0	$0	1		$42,000	410	$6,070,243
7TH AVE N & N 10TH ST & CREST AVE	Schools	$0	$13,000	$0	$0	$0	$0	$0	1	2020 Annual Street Repair Project	$13,000	411	$6,083,243
12TH AVE S & S 19TH ST	Schools	$0	$0	$0	$0	$0	$0	$0	1		$0	412	$6,083,243
S 8TH ST & KENYON RD & E KENYON RD	Schools; Parks	$0	$8,000	$0	$0	$0	$0	$0	1		$8,000	413	$6,091,243
1ST AVE N & N 4TH ST	Schools; Bus Stop; CBD; Government Facilities	$0	$0	$0	$0	$0	$0	$0	1	Main Street Streetscape 3rd St - 6th St	$0	414	$6,091,243
J ST & AVE C	Schools	$0	$37,000	$0	$0	$0	$0	$0	1		$37,000	415	$6,128,243
19TH AVE N & N 25TH ST	Schools	$0	$31,000	$0	$0	$0	$0	$0	1		$31,000	416	$6,159,243
ELMHURST AVE & N 23RD PL	Schools; Churches and Places of Worship	$0	$0	$0	$0	$0	$0	$0	1		$0	417	$6,159,243
7TH AVE N & ELIZABETH AVE & N 12TH ST	Schools	$0	$4,000	$0	$0	$0	$0	$0	1		$4,000	418	$6,163,243
10TH AVE S & S 17TH ST	Schools	$0	$21,000	$0	$0	$0	$0	$0	1		$21,000	419	$6,184,243

Table B-1: City of Fort Dodge Program Review - Implementation Plan													
Location	Land Use	Sidewalk Remediation Cost	Pedestrian Ramp Remediation Cost	Bus Stop Remediation Cost	Traffic Signal Remediation Cost	Crosswalk Remediation Cost	Railroad Crossing Remediation Cost	Barrier Remediation Cost	Priority	CIP Project	Total Cost	Rank	Running Total Cost
5TH AVE N & N 13TH ST	Schools	$0	$24,000	$0	$0	$0	$0	$0	1		$24,000	420	$6,208,243
N 3RD ST & CENTRAL AVE & S 3RD ST	Schools; CBD; Polling Locations	$0	$18,000	$0	$0	$0	$0	$0	1	Main Street Streetscape 3rd St - 6th St	$18,000	421	$6,226,243
N 26TH ST & 15TH AVE N	Schools	$0	$18,000	$0	$0	$0	$0	$0	1		$18,000	422	$6,244,243
KENYON RD & TRITON PLAZA	Schools	$0	$12,000	$0	$0	$0	$0	$0	1		$12,000	423	$6,256,243
N 32ND ST & 12TH AVE N	Schools	$0	$0	$0	$0	$0	$0	$0	1		$0	424	$6,256,243
4TH AVE S & S 15TH ST	Schools	$0	$38,000	$0	$0	$0	$0	$0	1		$38,000	425	$6,294,243
DAKOTA ST & N 7TH ST	Schools; Bus Stop	$0	$9,000	$0	$0	$0	$0	$0	1		$9,000	426	$6,303,243
N 26TH ST & 10TH AVE N	Schools	$0	$30,000	$0	$0	$0	$0	$0	1		$30,000	427	$6,333,243
N 23RD ST & 18TH AVE N	Schools	$0	$31,000	$0	$0	$0	$0	$0	1		$31,000	428	$6,364,243
N 24TH ST & 16TH AVE N	Schools; Bus Stop	$0	$12,000	$0	$0	$0	$0	$0	1		$12,000	429	$6,376,243
S 7TH ST & N 7TH ST & CENTRAL AVE	Schools; CBD; Government Facilities; Housing complexes, including apartments; Shopping malls, supermarkets and strip retail centers	$0	$14,000	$0	$0	$0	$0	$0	1	Main Street Streetscape 6th St - 9th St	$14,000	430	$6,390,243
2ND AVE N & N 32ND ST	Schools	$0	$6,000	$0	$0	$0	$0	$0	1		$6,000	431	$6,396,243
10TH AVE N & MARTIN LUTHER KING DR	Schools; Public Housing and Homeless Shelters	$0	$0	$0	$0	$0	$0	$0	1		$0	432	$6,396,243
2ND AVE N & N 20TH ST	Schools	$0	$0	$0	$0	$0	$0	$0	1		$0	433	$6,396,243
11TH AVE N & N 16TH ST & 10TH AVE N	Schools	$0	$12,000	$0	$0	$0	$0	$0	1		$12,000	434	$6,408,243
14TH AVE N & N 13TH ST	Schools	$0	$1,000	$0	$0	$0	$0	$0	1		$1,000	435	$6,409,243
S 6TH ST & 2ND AVE S	Schools; CBD; Churches and Places of Worship	$0	$20,000	$0	$0	$0	$0	$0	1		$20,000	436	$6,429,243
TRITON CIR & TRITON PLAZA & TRITON AVE	Schools; Government Facilities; Libraries	$0	$6,000	$0	$0	$0	$0	$0	1		$6,000	437	$6,435,243
N 10TH ST & 4TH AVE N	Schools; Housing complexes, including apartments	$0	$22,000	$0	$0	$0	$0	$0	1		$22,000	438	$6,457,243
6TH AVE S & S 22ND ST	Schools	$0	$24,000	$0	$0	$0	$0	$0	1		$24,000	439	$6,481,243
N 11TH ST & 4TH AVE N	Schools; Housing complexes, including apartments	$0	$8,000	$0	$0	$0	$0	$0	1		$8,000	440	$6,489,243
N 15TH ST & S 15TH ST & CENTRAL AVE	Schools; CBD	$0	$36,000	$0	$0	$0	$0	$0	1		$36,000	441	$6,525,243
6TH AVE S & S 13TH ST	Schools	$0	$21,000	$0	$0	$0	$0	$0	1		$21,000	442	$6,546,243
17TH AVE N & N 14TH ST	Schools; Bus Stop	$0	$31,000	$0	$0	$0	$0	$0	1		$31,000	443	$6,577,243
S 19TH ST & 11TH AVE S	Schools	$0	$28,000	$0	$0	$0	$0	$0	1		$28,000	444	$6,605,243
9 1/2 AVE S & S 27TH ST	Schools	$0	$24,000	$0	$0	$0	$0	$0	1		$24,000	445	$6,629,243
9TH AVE S & S 19TH ST	Schools	$0	$4,000	$0	$0	$0	$0	$0	1		$4,000	446	$6,633,243
N 10TH ST & 6TH AVE N	Schools	$0	$13,000	$0	$0	$0	$0	$0	1		$13,000	447	$6,646,243
H ST & AVE C	Schools	$0	$6,000	$0	$0	$0	$0	$0	1		$6,000	448	$6,652,243
3RD AVE N & N 20TH ST	Schools	$0	$38,000	$0	$0	$0	$0	$0	1		$38,000	449	$6,690,243
20TH AVE N & WILLIAMS DR	Schools	$0	$6,000	$0	$0	$0	$0	$0	1		$6,000	450	$6,696,243
19TH AVE N & N 27TH ST	Schools	$0	$36,000	$0	$0	$0	$0	$0	1		$36,000	451	$6,732,243
13TH AVE N & N 29TH ST	Schools	$0	$19,000	$0	$0	$0	$0	$0	1		$19,000	452	$6,751,243
2ND AVE N & S 25TH ST	Schools; Bus Stop	$0	$12,000	$0	$0	$0	$0	$0	1		$12,000	453	$6,763,243
S 22ND ST & 13TH AVE S	Schools	$0	$31,000	$0	$0	$0	$0	$0	1		$31,000	454	$6,794,243
2ND AVE S & S 17TH ST	Schools	$0	$0	$0	$0	$0	$0	$0	1		$0	455	$6,794,243
3RD AVE S & S 6TH ST	Schools; CBD	$0	$0	$0	$0	$0	$0	$0	1		$0	456	$6,794,243
S 28TH ST & 14TH AVE S	Schools	$0	$24,000	$0	$0	$0	$0	$0	1		$24,000	457	$6,818,243
S 16TH ST & 4TH AVE S	Schools	$0	$0	$0	$0	$0	$0	$0	1		$0	458	$6,818,243
12TH AVE S & S 22ND ST	Schools	$0	$0	$0	$0	$0	$0	$0	1		$0	459	$6,818,243
10TH AVE SW & 10TH ST SW	Schools; Parks	$0	$12,000	$0	$0	$0	$0	$0	1		$12,000	460	$6,830,243
N 20TH ST & 6TH AVE N	Schools	$0	$3,000	$0	$0	$0	$0	$0	1		$3,000	461	$6,833,243
AVE O & TRITON PLAZA	Schools; Bus Stop	$0	$1,000	$0	$0	$0	$0	$0	1		$1,000	462	$6,834,243

Table B-1: City of Fort Dodge Program Review - Implementation Plan													
Location	Land Use	Sidewalk Remediation Cost	Pedestrian Ramp Remediation Cost	Bus Stop Remediation Cost	Traffic Signal Remediation Cost	Crosswalk Remediation Cost	Railroad Crossing Remediation Cost	Barrier Remediation Cost	Priority	CIP Project	Total Cost	Rank	Running Total Cost
N 23RD ST & 10TH AVE N & N 23RD PL	Schools; Churches and Places of Worship	$0	$0	$0	$0	$0	$0	$0	1		$0	463	$6,834,243
6TH AVE N & N 8TH ST	Schools	$0	$18,000	$0	$0	$0	$0	$0	1		$18,000	464	$6,852,243
ELMHURST AVE & N 26TH ST	Schools	$0	$6,000	$0	$0	$0	$0	$0	1		$6,000	465	$6,858,243
2ND AVE N	Schools	$0	$0	$0	$0	$0	$0	$0	1		$0	466	$6,858,243
S 8TH ST & 1ST AVE S	Schools; CBD; Government Facilities	$0	$0	$0	$0	$0	$0	$0	1	Main Street Streetscape 6th St - 9th St	$0	467	$6,858,243
21ST AVE N & N 14TH ST	Schools	$0	$18,000	$0	$0	$0	$0	$0	1		$18,000	468	$6,876,243
13TH PL S & S 21ST ST & S 19TH ST	Schools	$0	$6,000	$0	$0	$0	$0	$0	1		$6,000	469	$6,882,243
5TH AVE N & N 22ND ST	Schools; Industrial	$0	$0	$0	$0	$0	$0	$0	1		$0	470	$6,882,243
N 29TH ST & 4TH AVE N	Schools; Bus Stop; Housing complexes, including apartments	$0	$36,000	$0	$0	$0	$0	$0	1		$36,000	471	$6,918,243
N 24TH ST & ELMHURST AVE	Schools	$0	$0	$0	$0	$0	$0	$0	1		$0	472	$6,918,243
AVE F & E ST	Schools	$0	$4,000	$0	$0	$0	$0	$0	1		$4,000	473	$6,922,243
1ST AVE S & S 10TH ST	Schools; CBD; Churches and Places of Worship; Housing complexes, including apartments	$0	$0	$0	$0	$0	$0	$0	1	Main Street Streetscape 9th St - 12th St	$0	474	$6,922,243
9TH AVE S & PROSPECT AVE & S 15TH ST	Schools	$0	$0	$0	$0	$0	$0	$0	1		$0	475	$6,922,243
ELMHURST AVE & N 25TH ST	Schools	$0	$19,000	$0	$0	$0	$0	$0	1		$19,000	476	$6,941,243
N 27TH ST & 2ND AVE N	Schools; Housing complexes, including apartments	$0	$6,000	$0	$0	$0	$0	$0	1		$6,000	477	$6,947,243
N 16TH ST & 9TH AVE N	Schools	$0	$12,000	$0	$0	$0	$0	$0	1		$12,000	478	$6,959,243
DODGER DR	Schools	$0	$0	$0	$0	$0	$0	$0	1		$0	479	$6,959,243
N 22ND ST & 3RD AVE N	Schools; Colleges	$0	$0	$0	$0	$0	$0	$0	1		$0	480	$6,959,243
10TH AVE S & S 19TH ST	Schools	$0	$19,000	$0	$0	$0	$0	$0	1		$19,000	481	$6,978,243
S 27TH ST & 14TH AVE S	Schools	$0	$36,000	$0	$0	$0	$0	$0	1		$36,000	482	$7,014,243
N 32ND ST & 13TH AVE N	Schools	$0	$6,000	$0	$0	$0	$0	$0	1		$6,000	483	$7,020,243
15TH AVE N & WILLIAMS DR	Schools	$0	$2,000	$0	$0	$0	$0	$0	1		$2,000	484	$7,022,243
6TH ST & S 6TH ST & 1ST AVE S	Schools; CBD; Government Facilities	$0	$0	$0	$0	$0	$0	$0	1		$0	485	$7,022,243
N 27TH ST & 17TH AVE N	Schools	$0	$0	$0	$0	$0	$0	$0	1		$0	486	$7,022,243
5TH AVE N & N 18TH ST	Schools	$0	$31,000	$0	$0	$0	$0	$0	1		$31,000	487	$7,053,243
1ST AVE S & S 17TH ST	Schools	$0	$0	$0	$0	$0	$0	$0	1		$0	488	$7,053,243
1ST AVE S & S 3RD ST	Schools; CBD; Government Facilities; Industrial	$0	$0	$0	$0	$0	$0	$0	1		$0	489	$7,053,243
11TH AVE S & S 25TH ST	Schools	$0	$31,000	$0	$0	$0	$0	$0	1		$31,000	490	$7,084,243
N 17TH ST & CENTRAL AVE & S 17TH ST	Schools; Hospitals, Health Clinics, and Medical Facilities (Public and Private)	$0	$9,000	$0	$0	$0	$0	$0	1		$9,000	491	$7,093,243
N 24TH ST & 14TH AVE N	Schools; Churches and Places of Worship	$0	$15,000	$0	$0	$0	$0	$0	1		$15,000	492	$7,108,243
RATHERMEL DR & 17TH AVE N	Schools	$0	$14,000	$0	$0	$0	$0	$0	1		$14,000	493	$7,122,243
5TH AVE N & N 16TH ST	Schools	$0	$36,000	$0	$0	$0	$0	$0	1		$36,000	494	$7,158,243
16TH AVE N & N 14TH ST	Schools	$0	$19,000	$0	$0	$0	$0	$0	1		$19,000	495	$7,177,243
3RD AVE S & S 14TH ST	Schools	$0	$0	$0	$0	$0	$0	$0	1		$0	496	$7,177,243
2ND AVE S & S 18TH ST	Schools	$0	$0	$0	$0	$0	$0	$0	1		$0	497	$7,177,243
9 1/2 AVE S & S 26TH ST	Schools	$0	$36,000	$0	$0	$0	$0	$0	1		$36,000	498	$7,213,243
N 19TH ST & S 19TH ST & CENTRAL AVE	Schools	$0	$7,000	$0	$0	$0	$0	$0	1		$7,000	499	$7,220,243
3RD AVE N & N 13TH ST	Schools	$0	$38,000	$0	$0	$0	$0	$0	1		$38,000	500	$7,258,243
S 4TH ST & 2ND AVE S	Schools; CBD; Shopping malls, supermarkets and strip retail centers	$0	$36,000	$0	$0	$0	$0	$0	1		$36,000	501	$7,294,243

Table B-1: City of Fort Dodge Program Review - Implementation Plan													
Location	Land Use	Sidewalk Remediation Cost	Pedestrian Ramp Remediation Cost	Bus Stop Remediation Cost	Traffic Signal Remediation Cost	Crosswalk Remediation Cost	Railroad Crossing Remediation Cost	Barrier Remediation Cost	Priority	CIP Project	Total Cost	Rank	Running Total Cost
14TH AVE S & S 24TH ST	Schools	$0	$0	$0	$0	$0	$0	$0	1		$0	502	$7,294,243
AVE F & F ST	Schools	$0	$6,000	$0	$0	$0	$0	$0	1		$6,000	503	$7,300,243
N 28TH ST & 20TH AVE N	Schools	$0	$28,000	$0	$0	$0	$0	$0	1		$28,000	504	$7,328,243
2ND AVE N & N 10TH ST	Schools; CBD	$0	$6,000	$0	$0	$0	$0	$0	1		$6,000	505	$7,334,243
N 31ST PL & 12TH AVE N	Schools	$0	$31,000	$0	$0	$0	$0	$0	1		$31,000	506	$7,365,243
5TH AVE N & N 15TH ST	Schools; Bus Stop	$0	$36,000	$0	$0	$0	$0	$0	1		$36,000	507	$7,401,243
11TH AVE N & N 32ND ST	Schools	$0	$6,000	$0	$0	$0	$0	$0	1		$6,000	508	$7,407,243
N 30TH ST & 18TH AVE N	Schools	$0	$30,000	$0	$0	$0	$0	$0	1		$30,000	509	$7,437,243
DAKOTA ST & N 9TH ST	Schools	$0	$1,000	$0	$0	$0	$0	$0	1		$1,000	510	$7,438,243
N 9TH ST & 6TH AVE N	Schools	$0	$7,000	$0	$0	$0	$0	$0	1		$7,000	511	$7,445,243
S 8TH ST & CENTRAL AVE & N 8TH ST	Schools; CBD; Government Facilities; Hospitals, Health Clinics, and Medical Facilities (Public and Private)	$0	$18,000	$0	$0	$0	$0	$0	1	Main Street Streetscape 6th St - 9th St	$18,000	512	$7,463,243
7TH AVE S & S 17TH ST	Government Facilities	$0	$21,000	$0	$0	$0	$0	$0	1		$21,000	513	$7,484,243
AVE E & KENYON RD	Hospitals, Health Clinics, and Medical Facilities (Public and Private)	$0	$0	$0	$0	$0	$0	$0	1		$0	514	$7,484,243
S 30TH ST & 5TH AVE S	Hospitals, Health Clinics, and Medical Facilities (Public and Private); Industrial; Shopping malls, supermarkets and strip retail centers	$0	$30,000	$0	$0	$0	$0	$0	1	7th Ave S Street Improvements; S 30th St	$30,000	515	$7,514,243
KENYON RD	Hospitals, Health Clinics, and Medical Facilities (Public and Private)	$0	$0	$0	$0	$0	$0	$0	1		$0	516	$7,514,243
N 16TH ST & 20TH AVE N	Public Housing and Homeless Shelters	$0	$25,000	$0	$0	$0	$0	$0	1		$25,000	517	$7,539,243
12TH AVE SW & 17TH ST SW	Bus Stop	$0	$4,000	$0	$0	$0	$0	$0	1		$4,000	518	$7,543,243
2ND AVE N & N 19TH ST	Bus Stop	$0	$0	$0	$0	$0	$0	$0	1		$0	519	$7,543,243
N 15TH ST & 28TH AVE N & FRONTAGE RD	Bus Stop	$0	$0	$0	$0	$0	$0	$0	1		$0	520	$7,543,243
8TH AVE N & N 9TH ST	Bus Stop	$0	$12,000	$0	$0	$0	$0	$0	1		$12,000	521	$7,555,243
3RD AVE NW & NW 2ND ST	Bus Stop	$0	$18,000	$0	$0	$0	$0	$0	1		$18,000	522	$7,573,243
HAWKEYE AVE E & HAWKEYE AVE W & NW 2ND ST	Bus Stop	$0	$25,000	$0	$0	$0	$0	$0	1	Northwest River District Phase 1	$25,000	523	$7,598,243
C ST & AVE C	Bus Stop	$0	$12,000	$0	$0	$0	$0	$0	1		$12,000	524	$7,610,243
8TH AVE N & N 3RD ST	Bus Stop	$0	$36,000	$0	$0	$0	$0	$0	1		$36,000	525	$7,646,243
S 29TH ST & 1ST AVE S	Bus Stop; Shopping malls, supermarkets and strip retail centers	$0	$6,000	$0	$0	$0	$0	$0	1	Corridor Plaza Development	$6,000	526	$7,652,243
1ST AVE S & S 25TH ST	Bus Stop; Shopping malls, supermarkets and strip retail centers	$0	$0	$0	$0	$0	$0	$0	1	Corridor Plaza Development	$0	527	$7,652,243
11TH AVE N & N 7TH ST	Bus Stop	$0	$32,000	$0	$0	$0	$0	$0	1		$32,000	528	$7,684,243
NW 7TH ST & 3RD AVE NW	Bus Stop	$0	$7,000	$0	$0	$0	$0	$0	1	Northwest River District Phase 1	$7,000	529	$7,691,243
5TH AVE S & S 21ST ST	Bus Stop; Shopping malls, supermarkets and strip retail centers	$0	$1,000	$0	$0	$0	$0	$0	1		$1,000	530	$7,692,243
2ND AVE N & S 29TH ST & N 29TH ST	Bus Stop; Housing complexes, including apartments	$0	$26,000	$0	$0	$0	$0	$0	1		$26,000	531	$7,718,243
S 30TH ST & 7TH AVE S	Bus Stop	$0	$0	$0	$0	$0	$0	$0	1	7th Ave S Street Improvements; S 30th St	$0	532	$7,718,243

Table B-1: City of Fort Dodge Program Review - Implementation Plan													
Location	Land Use	Sidewalk Remediation Cost	Pedestrian Ramp Remediation Cost	Bus Stop Remediation Cost	Traffic Signal Remediation Cost	Crosswalk Remediation Cost	Railroad Crossing Remediation Cost	Barrier Remediation Cost	Priority	CIP Project	Total Cost	Rank	Running Total Cost
Snell-Crawford Park - Summit Avenue Connector	Parks	$29,011	$0	$0	$0	$0	$0	$0	1		$29,011	533	$7,747,254
Little Dam Trail	Parks	$0	$0	$0	$0	$0	$0	$800	1		$800	534	$7,748,054
Phinney Park Trail	Industrial; Parks	$0	$0	$0	$0	$0	$0	$0	1		$0	535	$7,748,054
Hydro-Electric Park	Parks	$11,829	$0	$0	$0	$0	$0	$0	1		$11,829	536	$7,759,883
N 7th Street - Nature Trail Connector	Parks	$0	$0	$0	$0	$0	$0	$3,000	1		$3,000	537	$7,762,883
14TH AVE N & N 7TH ST	Parks	$0	$18,000	$0	$0	$0	$0	$0	1		$18,000	538	$7,780,883
7TH AVE N & N 2ND ST	Parks	$0	$27,000	$0	$0	$0	$0	$0	1		$27,000	539	$7,807,883
8TH AVE N & N 7TH ST	Parks	$0	$2,000	$0	$0	$0	$0	$0	1		$2,000	540	$7,809,883
15TH AVE S & OLESON PARK AVE	Parks	$0	$1,000	$0	$0	$0	$0	$0	1	15th Ave S Reconstruction	$1,000	541	$7,810,883
7TH AVE N & N 7TH ST	Parks	$0	$2,000	$0	$0	$0	$0	$0	1		$2,000	542	$7,812,883
ELMHURST CT & N 19TH ST	Parks	$0	$2,000	$0	$0	$0	$0	$0	1		$2,000	543	$7,814,883
14TH AVE N & N 8TH ST	Parks	$0	$6,000	$0	$0	$0	$0	$0	1		$6,000	544	$7,820,883
11TH AVE N & CRAWFORD AVE	Parks	$0	$0	$0	$0	$0	$0	$0	1		$0	545	$7,820,883
CRAWFORD AVE & 10TH AVE N	Parks	$0	$1,000	$0	$0	$0	$0	$0	1		$1,000	546	$7,821,883
26TH AVE N & N 14TH ST	Parks	$0	$24,000	$0	$0	$0	$0	$0	1		$24,000	547	$7,845,883
8TH AVE N & N 2ND ST	Parks	$0	$18,000	$0	$0	$0	$0	$0	1		$18,000	548	$7,863,883
LOOMIS PARK DR & N 7TH ST	Parks	$0	$1,000	$0	$0	$0	$0	$0	1		$1,000	549	$7,864,883
M ST & AVE B	Parks	$0	$11,000	$0	$0	$0	$0	$0	1		$11,000	550	$7,875,883
S 28TH ST & 11TH AVE S	Polling Locations	$0	$2,000	$0	$0	$0	$0	$0	1		$2,000	551	$7,877,883
N 1ST ST & S 1ST ST & CENTRAL AVE	CBD	$0	$6,000	$0	$0	$0	$0	$0	2		$6,000	552	$7,883,883
S 31ST ST & 5TH AVE S	Shopping malls, supermarkets and strip retail centers	$0	$12,000	$0	$0	$0	$0	$0	2		$12,000	553	$7,895,883
S 32ND ST & 5TH AVE S	Shopping malls, supermarkets and strip retail centers	$0	$0	$0	$0	$0	$0	$0	2		$0	554	$7,895,883
N 15TH ST & DOTUR 31ST LN & 31ST AVE N	Churches and Places of Worship	$0	$12,000	$0	$0	$0	$0	$0	2		$12,000	555	$7,907,883
N 1ST ST	CBD	$0	$2,000	$0	$0	$0	$0	$0	2		$2,000	556	$7,909,883
11TH AVE N & LOOMIS AVE & N 3RD ST	Churches and Places of Worship	$0	$18,000	$0	$0	$0	$0	$0	2		$18,000	557	$7,927,883
7TH AVE N & N 8TH ST	Housing complexes, including apartments	$0	$8,000	$0	$0	$0	$0	$0	2		$8,000	558	$7,935,883
5TH AVE N & N 3RD ST	Shopping malls, supermarkets and strip retail centers	$0	$20,000	$0	$0	$0	$0	$0	2		$20,000	559	$7,955,883
S 20TH ST & 5TH AVE S	Shopping malls, supermarkets and strip retail centers	$0	$16,000	$0	$0	$0	$0	$0	2		$16,000	560	$7,971,883
12TH AVE SW & 16TH ST SW	Other	$0	$11,000	$0	$0	$0	$0	$0	3		$11,000	561	$7,982,883
11TH AVE SW & 11TH ST SW	Other	$0	$7,000	$0	$0	$0	$0	$0	3		$7,000	562	$7,989,883
N 15TH ST & FLORAL AVE	Other	$0	$7,000	$0	$0	$0	$0	$0	3	N 15th St Corridor Phase 3: 6th A N - 20th A N	$7,000	563	$7,996,883
20TH AVE N & N 14TH CT	Other	$0	$12,000	$0	$0	$0	$0	$0	3		$12,000	564	$8,008,883
NW 3RD ST & 7TH AVE NW	Other	$0	$12,000	$0	$0	$0	$0	$0	3		$12,000	565	$8,020,883
N 6TH ST & 10TH AVE N	Other	$0	$12,000	$0	$0	$0	$0	$0	3		$12,000	566	$8,032,883
N 32ND ST & 16TH AVE N	Other	$0	$6,000	$0	$0	$0	$0	$0	3		$6,000	567	$8,038,883
HICKORY CIR & N 25TH ST	Other	$0	$16,000	$0	$0	$0	$0	$0	3		$16,000	568	$8,054,883
N 13TH ST & 27TH AVE N	Other	$0	$36,000	$0	$0	$0	$0	$0	3		$36,000	569	$8,090,883
N 15TH ST & 27TH AVE N & FRONTAGE RD	Other	$0	$0	$0	$0	$0	$0	$0	3		$0	570	$8,090,883
11TH AVE N & N 15TH ST & 12TH AVE N	Other	$0	$1,000	$0	$0	$0	$0	$0	3	N 15th St Corridor Phase 3: 6th A N - 20th A N	$1,000	571	$8,091,883
11TH AVE N & N 16TH ST	Other	$0	$7,000	$0	$0	$0	$0	$0	3		$7,000	572	$8,098,883
27TH AVE N & WILLIAMS DR	Other	$0	$24,000	$0	$0	$0	$0	$0	3		$24,000	573	$8,122,883
S 15TH ST & 8TH AVE S	Other	$0	$12,000	$0	$0	$0	$0	$0	3	east to 15th St; S 14th St: 10th A SW to 8th A S	$12,000	574	$8,134,883
S 21ST ST & 7TH AVE S	Other	$0	$19,000	$0	$0	$0	$0	$0	3		$19,000	575	$8,153,883

Table B-1: City of Fort Dodge Program Review - Implementation Plan													
Location	Land Use	Sidewalk Remediation Cost	Pedestrian Ramp Remediation Cost	Bus Stop Remediation Cost	Traffic Signal Remediation Cost	Crosswalk Remediation Cost	Railroad Crossing Remediation Cost	Barrier Remediation Cost	Priority	CIP Project	Total Cost	Rank	Running Total Cost
S 15TH ST & 13TH AVE SW & 18TH ST SW	Other	$0	$1,000	$0	$0	$0	$0	$0	3		$1,000	576	$8,154,883
N 32ND ST & 25TH AVE N	Other	$0	$0	$0	$0	$0	$0	$0	3		$0	577	$8,154,883
AVE E & B ST	Other	$0	$24,000	$0	$0	$0	$0	$0	3		$24,000	578	$8,178,883
AVE C & A ST	Other	$0	$6,000	$0	$0	$0	$0	$0	3		$6,000	579	$8,184,883
1ST AVE S	Other	$0	$0	$0	$0	$0	$0	$0	3		$0	580	$8,184,883
6TH AVE S & S 19TH ST	Other	$0	$12,000	$0	$0	$0	$0	$0	3		$12,000	581	$8,196,883
22ND AVE N & N 25TH ST	Other	$0	$18,000	$0	$0	$0	$0	$0	3		$18,000	582	$8,214,883
HAWKEYE AVE W & NW 4TH ST	Other	$0	$6,000	$0	$0	$0	$0	$0	3	Northwest River District Phase 1	$6,000	583	$8,220,883
24TH AVE N & N 15H PL	Other	$0	$0	$0	$0	$0	$0	$0	3		$0	584	$8,220,883
WILLIAMS DR	Other	$0	$24,000	$0	$0	$0	$0	$0	3		$24,000	585	$8,244,883
28TH AVE N & N 14TH ST	Other	$0	$16,000	$0	$0	$0	$0	$0	3		$16,000	586	$8,260,883
N 15TH PL & 28TH AVE N	Other	$0	$16,000	$0	$0	$0	$0	$0	3		$16,000	587	$8,276,883
8TH AVE N & FOREST AVE	Other	$0	$6,000	$0	$0	$0	$0	$0	3		$6,000	588	$8,282,883
DODGE CIR	Other	$0	$24,000	$0	$0	$0	$0	$0	3		$24,000	589	$8,306,883
N 22ND ST & 25TH AVE N & N 25TH ST	Other	$0	$0	$0	$0	$0	$0	$0	3	N 22nd St 18th A N - 25th A N Reconstruct w/ Trail; Norther Arterial Crossing and Bridge	$0	590	$8,306,883
N 7TH ST & 12TH AVE N	Other	$0	$37,000	$0	$0	$0	$0	$0	3		$37,000	591	$8,343,883
SUMMIT AVE & 9TH AVE N & FOREST AVE	Other	$0	$0	$0	$0	$0	$0	$0	3		$0	592	$8,343,883
6TH AVE S & S 21ST ST	Other	$0	$12,000	$0	$0	$0	$0	$0	3		$12,000	593	$8,355,883
8TH AVE N & N 13TH ST	Other	$0	$0	$0	$0	$0	$0	$0	3		$0	594	$8,355,883
NW 5TH ST & 3RD AVE NW & HAWKEYE AVE W	Other	$0	$6,000	$0	$0	$0	$0	$0	3	Northwest River District Phase 1	$6,000	595	$8,361,883
6TH AVE S & S 17TH ST	Other	$0	$0	$0	$0	$0	$0	$0	3		$0	596	$8,361,883
KNOLLCREST DR & 17TH AVE N	Other	$0	$21,000	$0	$0	$0	$0	$0	3		$21,000	597	$8,382,883
WOODLAND DR & WILLIAMS DR	Other	$0	$18,000	$0	$0	$0	$0	$0	3		$18,000	598	$8,400,883
2ND AVE S & S 21ST ST	Other	$0	$6,000	$0	$0	$0	$0	$0	3		$6,000	599	$8,406,883
4TH AVE S & S 20TH ST	Other	$0	$43,000	$0	$0	$0	$0	$0	3		$43,000	600	$8,449,883
N 16TH ST & ELMHURST AVE	Other	$0	$12,000	$0	$0	$0	$0	$0	3		$12,000	601	$8,461,883
N 15TH PL & 26TH AVE N	Other	$0	$36,000	$0	$0	$0	$0	$0	3		$36,000	602	$8,497,883
22ND AVE N & N 30TH CT	Other	$0	$16,000	$0	$0	$0	$0	$0	3		$16,000	603	$8,513,883
12TH ST SW & 10TH AVE SW	Other	$0	$7,000	$0	$0	$0	$0	$0	3		$7,000	604	$8,520,883
3RD AVE NW & NW 12TH ST	Other	$0	$0	$0	$0	$0	$0	$0	3		$0	605	$8,520,883
10TH AVE N & FOREST AVE	Other	$0	$0	$0	$0	$0	$0	$0	3		$0	606	$8,520,883
N 16TH ST & 13TH AVE N	Other	$0	$18,000	$0	$0	$0	$0	$0	3		$18,000	607	$8,538,883
7TH AVE N & HAWKEYE AVE E	Other	$0	$13,000	$0	$0	$0	$0	$0	3		$13,000	608	$8,551,883
N 32ND ST & 17TH AVE N	Other	$0	$0	$0	$0	$0	$0	$0	3		$0	609	$8,551,883
3RD AVE NW & NW 13TH ST	Other	$0	$0	$0	$0	$0	$0	$0	3		$0	610	$8,551,883
18TH ST SW & 14TH AVE SW	Other	$0	$1,000	$0	$0	$0	$0	$0	3		$1,000	611	$8,552,883
NW 6TH ST & 3RD AVE NW	Other	$0	$2,000	$0	$0	$0	$0	$0	3	Northwest River District Phase 1	$2,000	612	$8,554,883
SUMMIT AVE & NORTHWOOD AVE	Other	$0	$0	$0	$0	$0	$0	$0	3		$0	613	$8,554,883
10TH AVE N & N 2ND ST	Other	$0	$12,000	$0	$0	$0	$0	$0	3		$12,000	614	$8,566,883
EXPOSITION AVE & 9TH AVE N	Other	$0	$6,000	$0	$0	$0	$0	$0	3		$6,000	615	$8,572,883
11TH AVE SW & 13TH ST SW	Other	$0	$11,000	$0	$0	$0	$0	$0	3		$11,000	616	$8,583,883
B ST & AVE B	Other	$0	$12,000	$0	$0	$0	$0	$0	3		$12,000	617	$8,595,883
N 5TH ST & 4TH AVE N	Other	$0	$6,000	$0	$0	$0	$0	$0	3		$6,000	618	$8,601,883
N 32ND ST & 18TH AVE N	Other	$0	$6,000	$0	$0	$0	$0	$0	3		$6,000	619	$8,607,883
5TH AVE NW & NW 2ND ST	Other	$0	$6,000	$0	$0	$0	$0	$0	3		$6,000	620	$8,613,883
N 4TH ST & 12TH AVE N	Other	$0	$24,000	$0	$0	$0	$0	$0	3		$24,000	621	$8,637,883
3RD AVE NW & NW 8TH ST	Other	$0	$7,000	$0	$0	$0	$0	$0	3		$7,000	622	$8,644,883
CRESTVIEW HTS & KENYON RD	Other	$0	$6,000	$0	$0	$0	$0	$0	3		$6,000	623	$8,650,883
13TH AVE N & N 19TH ST	Other	$0	$12,000	$0	$0	$0	$0	$0	3		$12,000	624	$8,662,883

Table B-1: City of Fort Dodge Program Review - Implementation Plan													
Location	Land Use	Sidewalk Remediation Cost	Pedestrian Ramp Remediation Cost	Bus Stop Remediation Cost	Traffic Signal Remediation Cost	Crosswalk Remediation Cost	Railroad Crossing Remediation Cost	Barrier Remediation Cost	Priority	CIP Project	Total Cost	Rank	Running Total Cost
14TH AVE N & KNOLLCREST DR	Other	$0	$11,000	$0	$0	$0	$0	$0	3		$11,000	625	$8,673,883
N 23RD ST & 20TH AVE N	Other	$0	$18,000	$0	$0	$0	$0	$0	3		$18,000	626	$8,691,883
15TH ST SW & 11TH AVE SW	Other	$0	$6,000	$0	$0	$0	$0	$0	3		$6,000	627	$8,697,883
N 13TH PL & 27TH AVE N	Other	$0	$26,000	$0	$0	$0	$0	$0	3		$26,000	628	$8,723,883
N 2ND ST & 6TH AVE N	Other	$0	$36,000	$0	$0	$0	$0	$0	3		$36,000	629	$8,759,883
20TH AVE N & N 25TH ST	Other	$0	$30,000	$0	$0	$0	$0	$0	3		$30,000	630	$8,789,883
4TH AVE NW & NW 2ND ST	Other	$0	$6,000	$0	$0	$0	$0	$0	3		$6,000	631	$8,795,883
15TH AVE N & N 8TH ST	Other	$0	$0	$0	$0	$0	$0	$0	3		$0	632	$8,795,883
WOODLAND DR	Other	$0	$12,000	$0	$0	$0	$0	$0	3		$12,000	633	$8,807,883
9TH AVE N & N 7TH ST	Other	$0	$8,000	$0	$0	$0	$0	$0	3		$8,000	634	$8,815,883
LOOMIS PARK DR & HAWKEYE AVE E	Other	$0	$0	$0	$0	$0	$0	$0	3		$0	635	$8,815,883
1ST AVE NW & NW 2ND ST	Other	$0	$7,000	$0	$0	$0	$0	$0	3		$7,000	636	$8,822,883
13TH AVE N & DODGE CIR	Other	$0	$36,000	$0	$0	$0	$0	$0	3		$36,000	637	$8,858,883
25TH AVE N & WILLIAMS DR	Other	$0	$13,000	$0	$0	$0	$0	$0	3		$13,000	638	$8,871,883
11TH AVE N & JUNIOR CT	Other	$0	$30,000	$0	$0	$0	$0	$0	3		$30,000	639	$8,901,883
AVE B & A ST	Other	$0	$0	$0	$0	$0	$0	$0	3		$0	640	$8,901,883
11TH AVE SW & 16TH ST SW	Other	$0	$0	$0	$0	$0	$0	$0	3		$0	641	$8,901,883
8TH AVE N & EXPOSITION AVE & N 7TH ST	Other	$0	$4,000	$0	$0	$0	$0	$0	3		$4,000	642	$8,905,883
28TH AVE N & N 13TH ST	Other	$0	$36,000	$0	$0	$0	$0	$0	3		$36,000	643	$8,941,883
N 15TH PL & 25TH AVE N	Other	$0	$36,000	$0	$0	$0	$0	$0	3		$36,000	644	$8,977,883
7TH AVE NW	Other	$0	$0	$0	$0	$0	$0	$0	3		$0	645	$8,977,883
13TH AVE SW & 16TH ST SW	Other	$0	$14,000	$0	$0	$0	$0	$0	3		$14,000	646	$8,991,883
10TH AVE N & N 14TH ST	Other	$0	$0	$0	$0	$0	$0	$0	3		$0	647	$8,991,883
N 12TH ST & 25TH AVE N	Other	$0	$36,000	$0	$0	$0	$0	$0	3		$36,000	648	$9,027,883
COUNTRY CLUB DR	Other	$0	$0	$0	$0	$0	$0	$0	3	Country Club Crack and Seat Project	$0	649	$9,027,883
S 19TH ST & 13TH AVE S	Other	$0	$6,000	$0	$0	$0	$0	$0	3		$6,000	650	$9,033,883
S 31ST ST & 8TH AVE S	Other	$0	$0	$0	$0	$0	$0	$0	3		$0	651	$9,033,883
15TH AVE N & N 7TH ST	Other	$0	$6,000	$0	$0	$0	$0	$0	3		$6,000	652	$9,039,883
JONATHAN DR & 20TH AVE N & JONATHAN CIR	Other	$0	$0	$0	$0	$0	$0	$0	3		$0	653	$9,039,883
14TH AVE SW & 17TH ST SW	Other	$0	$22,000	$0	$0	$0	$0	$0	3		$22,000	654	$9,061,883
WOODLAND DR & 26TH AVE N	Other	$0	$6,000	$0	$0	$0	$0	$0	3		$6,000	655	$9,067,883
HOME AVE & N 9TH ST & WILLIAMS DR	Other	$0	$18,000	$0	$0	$0	$0	$0	3		$18,000	656	$9,085,883
N 15TH ST & 12TH AVE N	Other	$0	$19,000	$0	$0	$0	$0	$0	3	N 15th St Corridor Phase 3: 6th A N - 20th A N; Recreational Trail Repairs (Snell-Crawford Park)	$19,000	657	$9,104,883
210TH ST & PARAGON AVE	Other	$0	$0	$0	$0	$0	$0	$0	3		$0	658	$9,104,883
9TH AVE S & S 15TH ST	Other	$0	$13,000	$0	$0	$0	$0	$0	3		$13,000	659	$9,117,883
5TH AVE N & CHARLES ST & N 2ND ST	Other	$0	$15,000	$0	$0	$0	$0	$0	3		$15,000	660	$9,132,883
21ST AVE N & N 14TH CT	Other	$0	$24,000	$0	$0	$0	$0	$0	3		$24,000	661	$9,156,883
DODGE CIR & ELMHURST AVE	Other	$0	$6,000	$0	$0	$0	$0	$0	3		$6,000	662	$9,162,883
N 28TH ST & 27TH AVE N	Other	$0	$2,000	$0	$0	$0	$0	$0	3		$2,000	663	$9,164,883
SOLDIER CREEK DR	Other	$0	$12,000	$0	$0	$0	$0	$0	3	Soldier Creek Nature Trail Bridge Replacments	$12,000	664	$9,176,883
N 15TH ST & 13TH AVE N	Other	$0	$0	$0	$0	$0	$0	$0	3	N 15th St Corridor Phase 3: 6th A N - 20th A N	$0	665	$9,176,883
N 15TH PL & 27TH AVE N	Other	$0	$36,000	$0	$0	$0	$0	$0	3		$36,000	666	$9,212,883
13TH AVE SW & 17TH ST SW	Other	$0	$18,000	$0	$0	$0	$0	$0	3		$18,000	667	$9,230,883
AVE G & B ST	Other	$0	$12,000	$0	$0	$0	$0	$0	3		$12,000	668	$9,242,883
S 31ST ST & 1ST AVE S	Other	$0	$6,000	$0	$0	$0	$0	$0	3		$6,000	669	$9,248,883
S 29TH ST & 8TH AVE S	Other	$0	$0	$0	$0	$0	$0	$0	3		$0	670	$9,248,883
S 32ND ST & 8TH AVE S	Other	$0	$0	$0	$0	$0	$0	$0	3		$0	671	$9,248,883

Table B-1: City of Fort Dodge Program Review - Implementation Plan

Location	Land Use	Sidewalk Remediation Cost	Pedestrian Ramp Remediation Cost	Bus Stop Remediation Cost	Traffic Signal Remediation Cost	Crosswalk Remediation Cost	Railroad Crossing Remediation Cost	Barrier Remediation Cost	Priority	CIP Project	Total Cost	Rank	Running Total Cost
9TH AVE N & N 3RD ST	Other	$0	$38,000	$0	$0	$0	$0	$0	3		$38,000	672	$9,286,883
14TH ST SW & 10TH AVE SW	Other	$0	$25,000	$0	$0	$0	$0	$0	3	east to 15th St; S 14th St: 10th A SW to 8th A S	$25,000	673	$9,311,883
C ST & AVE B	Other	$0	$6,000	$0	$0	$0	$0	$0	3		$6,000	674	$9,317,883
1ST AVE NW & NW 4TH ST	Other	$0	$12,000	$0	$0	$0	$0	$0	3		$12,000	675	$9,329,883
26TH AVE N & WILLIAMS DR	Other	$0	$28,000	$0	$0	$0	$0	$0	3		$28,000	676	$9,357,883
N 27TH ST & 27TH AVE N	Other	$0	$0	$0	$0	$0	$0	$0	3		$0	677	$9,357,883
N 15TH ST	Other	$0	$6,000	$0	$0	$0	$0	$0	3		$6,000	678	$9,363,883
29TH AVE N & OAK TREE CIR & N 28TH ST	Other	$0	$18,000	$0	$0	$0	$0	$0	3		$18,000	679	$9,381,883
4TH AVE NW & NW 4TH ST	Other	$0	$1,000	$0	$0	$0	$0	$0	3		$1,000	680	$9,382,883
10TH AVE SW & 11TH ST SW	Other	$0	$5,000	$0	$0	$0	$0	$0	3		$5,000	681	$9,387,883
9TH AVE N & N 13TH ST	Other	$0	$6,000	$0	$0	$0	$0	$0	3		$6,000	682	$9,393,883
OLESON PARK AVE & 13TH AVE S	Other	$0	$7,000	$0	$0	$0	$0	$0	3		$7,000	683	$9,400,883
RAYMOND DR & JUNIOR CT	Other	$0	$18,000	$0	$0	$0	$0	$0	3		$18,000	684	$9,418,883
S 20TH ST & 6TH AVE S	Other	$0	$19,000	$0	$0	$0	$0	$0	3		$19,000	685	$9,437,883
N 3RD ST & 10TH AVE N	Other	$0	$24,000	$0	$0	$0	$0	$0	3		$24,000	686	$9,461,883
KNOLLCREST DR & 18TH AVE N	Other	$0	$16,000	$0	$0	$0	$0	$0	3		$16,000	687	$9,477,883
D ST W & AVE O W	Other	$0	$12,000	$0	$0	$0	$0	$0	3		$12,000	688	$9,489,883
8TH AVE N & N 6TH ST	Other	$0	$6,000	$0	$0	$0	$0	$0	3		$6,000	689	$9,495,883
S 19TH ST & 7TH AVE S	Other	$0	$38,000	$0	$0	$0	$0	$0	3		$38,000	690	$9,533,883
JUNIOR CT & 12TH AVE N	Other	$0	$24,000	$0	$0	$0	$0	$0	3		$24,000	691	$9,557,883
N 27TH ST & ASHWOOD LN	Other	$0	$21,000	$0	$0	$0	$0	$0	3		$21,000	692	$9,578,883
29TH AVE N & N 14TH ST	Other	$0	$18,000	$0	$0	$0	$0	$0	3		$18,000	693	$9,596,883
N 4TH ST & 10TH AVE N	Other	$0	$21,000	$0	$0	$0	$0	$0	3		$21,000	694	$9,617,883
HAWKEYE AVE E & 1ST AVE NW & NW 2ND ST	Other	$0	$0	$0	$0	$0	$0	$0	3		$0	695	$9,617,883
N 14TH ST & 27TH AVE N	Other	$0	$31,000	$0	$0	$0	$0	$0	3		$31,000	696	$9,648,883
N 29TH ST & 22ND AVE N	Other	$0	$16,000	$0	$0	$0	$0	$0	3		$16,000	697	$9,664,883
CRESTVIEW HTS & O ST	Other	$0	$18,000	$0	$0	$0	$0	$0	3		$18,000	698	$9,682,883
S 18TH ST & 7TH AVE S	Other	$0	$0	$0	$0	$0	$0	$0	3		$0	699	$9,682,883
N 24TH PL & 20TH AVE N	Other	$0	$30,000	$0	$0	$0	$0	$0	3		$30,000	700	$9,712,883
S 32ND ST	Other	$0	$0	$0	$0	$0	$0	$0	3		$0	701	$9,712,883
1ST AVE S & S 23RD ST & S 23RD FRONTAGE ST 2	Other	$0	$0	$0	$0	$0	$0	$0	3		$0	702	$9,712,883
WILLIAMS DR & 12TH AVE N	Other	$0	$0	$0	$0	$0	$0	$0	3		$0	703	$9,712,883
N 15TH ST & 29TH AVE N	Other	$0	$7,000	$0	$0	$0	$0	$0	3		$7,000	704	$9,719,883
N 15TH ST & 14TH AVE N & 13TH AVE N	Other	$0	$6,000	$0	$0	$0	$0	$0	3	N 15th St Corridor Phase 3: 6th A N - 20th A N	$6,000	705	$9,725,883
L ST & AVE B	Other	$0	$2,000	$0	$0	$0	$0	$0	3		$2,000	706	$9,727,883
S 32ND ST & N 32ND ST & 1ST AVE S	Other	$0	$0	$0	$0	$0	$0	$0	3		$0	707	$9,727,883
AVE E & KENYON RD & L ST	Other	$0	$0	$0	$0	$0	$0	$0	3		$0	708	$9,727,883
5TH AVE S & S 18TH ST	Other	$0	$31,000	$0	$0	$0	$0	$0	3		$31,000	709	$9,758,883
WOODLAND DR & 25TH AVE N	Other	$0	$19,000	$0	$0	$0	$0	$0	3		$19,000	710	$9,777,883
N 13TH PL & 28TH AVE N	Other	$0	$26,000	$0	$0	$0	$0	$0	3		$26,000	711	$9,803,883
11TH AVE SW & 12TH ST SW	Other	$0	$4,000	$0	$0	$0	$0	$0	3		$4,000	712	$9,807,883
7TH AVE N & N 4TH ST	Other	$0	$1,000	$0	$0	$0	$0	$0	3		$1,000	713	$9,808,883
SOLDIER CREEK DR & 29TH AVE N & N 25TH ST	Other	$0	$2,000	$0	$0	$0	$0	$0	3		$2,000	714	$9,810,883
CRESTVIEW HTS & CRESTVIEW DR	Other	$0	$6,000	$0	$0	$0	$0	$0	3		$6,000	715	$9,816,883
N 15TH PL	Other	$0	$0	$0	$0	$0	$0	$0	3		$0	716	$9,816,883
N 3RD ST & 6TH AVE N	Other	$0	$7,000	$0	$0	$0	$0	$0	3		$7,000	717	$9,823,883
4TH AVE S & S 21ST ST	Other	$0	$30,000	$0	$0	$0	$0	$0	3		$30,000	718	$9,853,883

Table B-1: City of Fort Dodge Program Review - Implementation Plan													
Location	Land Use	Sidewalk Remediation Cost	Pedestrian Ramp Remediation Cost	Bus Stop Remediation Cost	Traffic Signal Remediation Cost	Crosswalk Remediation Cost	Railroad Crossing Remediation Cost	Barrier Remediation Cost	Priority	CIP Project	Total Cost	Rank	Running Total Cost
AVE G & C ST	Other	$0	$30,000	$0	$0	$0	$0	$0	3		$30,000	719	$9,883,883
S 28TH ST & 12TH AVE S	Other	$0	$9,000	$0	$0	$0	$0	$0	3		$9,000	720	$9,892,883
10TH AVE N & N 13TH ST	Other	$0	$19,000	$0	$0	$0	$0	$0	3		$19,000	721	$9,911,883
11TH AVE N & N 13TH ST	Other	$0	$0	$0	$0	$0	$0	$0	3		$0	722	$9,911,883
13TH PL S & OLESON PARK AVE	Other	$0	$7,000	$0	$0	$0	$0	$0	3		$7,000	723	$9,918,883
9TH AVE N & N 2ND ST	Other	$0	$12,000	$0	$0	$0	$0	$0	3		$12,000	724	$9,930,883
14TH AVE N & N 32ND ST	Other	$0	$0	$0	$0	$0	$0	$0	3		$0	725	$9,930,883
1ST AVE S & S 42ND ST	Other	$0	$0	$0	$0	$0	$0	$0	3		$0	726	$9,930,883
11TH AVE N & N 4TH ST	Other	$0	$22,000	$0	$0	$0	$0	$0	3		$22,000	727	$9,952,883
S 19TH ST & 5TH AVE S	Other	$0	$0	$0	$0	$0	$0	$0	3		$0	728	$9,952,883
S 23RD FRONTAGE ST 1 & 1ST AVE S & S 23RD ST	Other	$0	$6,000	$0	$0	$0	$0	$0	3		$6,000	729	$9,958,883
3RD AVE NW & AMVETS DR & NW 10TH ST	Other	$0	$2,000	$0	$0	$0	$0	$0	3		$2,000	730	$9,960,883
15TH ST SW & 12TH AVE SW	Other	$0	$8,000	$0	$0	$0	$0	$0	3		$8,000	731	$9,968,883
N 26TH ST & 20TH AVE N	Other	$0	$25,000	$0	$0	$0	$0	$0	3		$25,000	732	$9,993,883
8TH AVE N & N 4TH ST	Other	$0	$26,000	$0	$0	$0	$0	$0	3		$26,000	733	$10,019,883
N 15TH ST & 11TH AVE N & 12TH AVE N	Other	$0	$6,000	$0	$0	$0	$0	$0	3	N 15th St Corridor Phase 3: 6th A N - 20th A N	$6,000	734	$10,025,883
23rd Pl N	Other	$0	$2,000	$0	$0	$0	$0	$0	3		$2,000	735	$10,027,883
NELSON AVE	Other	$0	$0	$0	$0	$0	$0	$0	3		$0	736	$10,027,883
N 19TH ST & FLORAL AVE	Other	$0	$6,000	$0	$0	$0	$0	$0	3		$6,000	737	$10,033,883
N 1ST ST & HAWKEYE AVE E	Other	$0	$0	$0	$0	$0	$0	$0	3		$0	738	$10,033,883
11TH AVE SW & 7TH ST SW & 10TH ST SW	Other	$0	$8,000	$0	$0	$0	$0	$0	3	Kenyon Rd to Pleasant Valley Connection	$8,000	739	$10,041,883
10TH AVE S & S 29TH ST	Other	$0	$2,000	$0	$0	$0	$0	$0	3		$2,000	740	$10,043,883
25TH AVE N & N 13TH ST	Other	$0	$32,000	$0	$0	$0	$0	$0	3		$32,000	741	$10,075,883
HAWKEYE AVE E	Other	$0	$2,000	$0	$0	$0	$0	$0	3		$2,000	742	$10,077,883
NW 3RD ST & 5TH AVE NW	Other	$0	$2,000	$0	$0	$0	$0	$0	3		$2,000	743	$10,079,883
N 4TH ST & 9TH AVE N	Other	$0	$7,000	$0	$0	$0	$0	$0	3		$7,000	744	$10,086,883
14TH ST SW & 9TH AVE S	Other	$0	$24,000	$0	$0	$0	$0	$0	3	east to 15th St; S 14th St: 10th A SW to 8th A S	$24,000	745	$10,110,883
S 20TH ST & 7TH AVE S	Other	$0	$4,000	$0	$0	$0	$0	$0	3		$4,000	746	$10,114,883
10TH AVE SW & 13TH ST SW	Other	$0	$7,000	$0	$0	$0	$0	$0	3		$7,000	747	$10,121,883
170TH ST	Other	$0	$0	$0	$0	$0	$0	$0	3		$0	748	$10,121,883
N 15TH ST & 20TH AVE N	Other	$0	$18,000	$0	$0	$0	$0	$0	3	N 15th St Corridor Phase 3: 6th A N - 20th A N	$18,000	749	$10,139,883
N 6TH ST & DAKOTA ST	Other	$0	$13,000	$0	$0	$0	$0	$0	3		$13,000	750	$10,152,883
N 25TH ST & 27TH AVE N	Other	$0	$6,000	$0	$0	$0	$0	$0	3		$6,000	751	$10,158,883
C ST & AVE D	Other	$0	$24,000	$0	$0	$0	$0	$0	3		$24,000	752	$10,182,883
S 30TH ST & 8TH AVE S	Other	$0	$0	$0	$0	$0	$0	$0	3	7th Ave S Street Improvements; S 30th St	$0	753	$10,182,883
15TH AVE S & 17TH ST SW	Other	$0	$1,000	$0	$0	$0	$0	$0	3		$1,000	754	$10,183,883
AVE E & O ST	Other	$0	$0	$0	$0	$0	$0	$0	3		$0	755	$10,183,883
N 17TH ST & 20TH AVE N	Other	$0	$0	$0	$0	$0	$0	$0	3		$0	756	$10,183,883
SOLDIER CREEK DR N	Other	$0	$1,000	$0	$0	$0	$0	$0	3		$1,000	757	$10,184,883
8TH AVE N & N 8TH ST	Other	$0	$3,000	$0	$0	$0	$0	$0	3		$3,000	758	$10,187,883
NW 11TH ST & 3RD AVE NW	Other	$0	$2,000	$0	$0	$0	$0	$0	3		$2,000	759	$10,189,883
Freedom Rock	Other	$0	$6,000	$0	$0	$0	$0	$0	3		$6,000	760	$10,195,883
11TH AVE N & WILLIAMS DR	Other	$0	$0	$0	$0	$0	$0	$0	3		$0	761	$10,195,883
14TH AVE SW & 16TH ST SW	Other	$0	$12,000	$0	$0	$0	$0	$0	3		$12,000	762	$10,207,883
N 28TH ST & WALNUT CIR	Other	$0	$26,000	$0	$0	$0	$0	$0	3		$26,000	763	$10,233,883
26TH AVE N & N 13TH ST	Other	$0	$30,000	$0	$0	$0	$0	$0	3		$30,000	764	$10,263,883
7TH AVE N & N 3RD ST	Other	$0	$48,000	$0	$0	$0	$0	$0	3		$48,000	765	$10,311,883
RAYMOND DR & 12TH AVE N & N 8TH ST	Other	$0	$12,000	$0	$0	$0	$0	$0	3		$12,000	766	$10,323,883

Table B-1: City of Fort Dodge Program Review - Implementation Plan													
Location	Land Use	Sidewalk Remediation Cost	Pedestrian Ramp Remediation Cost	Bus Stop Remediation Cost	Traffic Signal Remediation Cost	Crosswalk Remediation Cost	Railroad Crossing Remediation Cost	Barrier Remediation Cost	Priority	CIP Project	Total Cost	Rank	Running Total Cost
14TH ST SW & 11TH AVE SW	Other	$0	$26,000	$0	$0	$0	$0	$0	3		$26,000	767	$10,349,883
4TH AVE NW & NW 1ST ST	Other	$0	$12,000	$0	$0	$0	$0	$0	3		$12,000	768	$10,361,883
N 28TH ST & 22ND AVE N	Other	$0	$12,000	$0	$0	$0	$0	$0	3		$12,000	769	$10,373,883
6TH AVE S & S 18TH ST	Other	$0	$6,000	$0	$0	$0	$0	$0	3		$6,000	770	$10,379,883
10TH AVE N & N 7TH ST	Other	$0	$0	$0	$0	$0	$0	$0	3		$0	771	$10,379,883
5TH AVE N & N 2ND ST	Other	$0	$18,000	$0	$0	$0	$0	$0	3		$18,000	772	$10,397,883
11TH AVE N & N 15TH ST	Other	$0	$36,000	$0	$0	$0	$0	$0	3	N 15th St Corridor Phase 3: 6th A N - 20th A N	$36,000	773	$10,433,883
KENYON RD & AVE C	Other	$0	$6,000	$0	$0	$0	$0	$0	3	Kenyon Rd and Ave C intersection Improvements	$6,000	774	$10,439,883
ELMHURST AVE & N 19TH ST	Other	$0	$24,000	$0	$0	$0	$0	$0	3		$24,000	775	$10,463,883
COUNTRY CLUB DR & 2ND AVE S & A ST	Other	$0	$6,000	$0	$0	$0	$0	$0	3	Country Club Crack and Seat Project	$6,000	776	$10,469,883
3RD AVE NW & NW 9TH ST	Other	$0	$2,000	$0	$0	$0	$0	$0	3		$2,000	777	$10,471,883

Figure B-50 - City of Fort Dodge Parking Lots

ADA Transition Plan
City of Fort Dodge

Parking Lots
November 2020

BOLTON & MENK
Real People. Real Solutions.

Map Document: \\arcserver\gis\FTDO\A1312079\ESRI\Maps\FTDO_ParkingLots.mxd | Date Saved: 11/12/2020 10:02:18 AM

Table B-2: Parking Lot Matrix

Table B-2. City of Fort Dodge ADA Transition Plan and Inventory - City Parking Lot Review Matrix

	Lot Access	Number of Spaces				Priority	
Parking Lot ID*	Access to PAR	Total Number of Spaces**	Total Number of Accessible Spaces	Accessible Car Spaces are 8 Feet Wide or Greater	1 or More Van Accessible Space per 6 Accessible Spaces	Priority Ranking	Land Uses
7	Yes	44	9	7	Yes	1	Schools; CBD
12	Yes	67	3	2	Yes	1	Schools; CBD; Public Housing and Homeless Shelters; Shopping malls, supermarkets and strip retail centers
11	Yes	56	7	4	Yes	1	Schools; CBD; Churches and Places of Worship; Hospitals, Health Clinics, and Medical Facilities (Public and Private)
1	Yes	61	6	3	Yes	1	Schools; CBD; Public Housing and Homeless Shelters; Shopping malls, supermarkets and strip retail centers
9	Yes	62	1	1	Yes	1	Schools; Bus Stop; CBD; Hospitals, Health Clinics, and Medical Facilities (Public and Private)
3	**No**	N/A	0	0	**No**	1	Schools; CBD; Industrial; Public Housing and Homeless Shelters
2	**No**	N/A	0	0	**No**	1	Schools; Industrial
4	Yes	83	20	17	Yes	1	Schools; CBD; Government Facilities
6	Yes	140	12	8	Yes	1	Schools; CBD

***Parking Lot ID's correspond with Figure B-50**

****A value of "N/A" in this column indicates a parking lot has no parking stall striping. These lots were considered as not having the appropriate number of accessible spaces**

Appendix C: ADA Transition Plan Projects referenced from the City of Fort Dodge Capital Improvements Plan

I. Appendix C: City of Fort Dodge Capital Improvements Plan (CIP) Projects that Include (Consider) Accessible Pedestrian Infrastructure

1. Capital Improvements Plan

   The City of Fort Dodge's Capital Improvements Plan (CIP) ensures repairs, replacement, or expansion of public facilities, streets, parks, etc. are effectively planned and budgeted for by the City.

2. State Transportation Improvement Program

   There are three projects for the City of Fort Dodge scheduled in the State Transportation Improvement Program (STIP) which is listed below.

City	**Proposed Improvements**	**Year**
Repair	Annual Street Repair Projects	2020-2024
Reimbursements	Corridor Plaza Development	2020-2022
Repair	N 1st St Bridge	2021
Reconstruction	North River District Phase 1 - Hawkeye Bridge to 7th St NW	2022
Trail	Soldier Creek Nature Trail Bridge Replacements	2020-2021
Trail	Phinney Park, Loomis Park, and Snell-Crawford Park	2020
Trail	Trail Project Phase 3 – 170th St from BHJ to N 15th St	2021
Reconstruction	1st Ave S & S 15th Street Corridor Improvements	2020
Reconstruction	15th Ave S Reconstruction	2021
Mill & Overlay/ADA	N 22nd St from 2nd Ave N-10th Ave N & N 14th St from Central Ave-6th Ave N	2020
Reconstruction	S 30th St & 7th Ave S Improvements	2020
Reconstruction	Country Club Streets Improvements	2021
STIP		
Bridge Replacement	South 19th St Bridge over Union Pacific Railroad (Current bridge carries a pedestrian crossing), BROS-SWAP-2690(631)--SE-94	2020
Ped/Bike Development	170th Street, from End of existing trail west 1.25 Miles to Nelson Avenue/N 15th St, TAP-U-2690(635)--8I-94	2021
Miscellaneous	3rd Ave NW/Hawkeye Ave, from Northwest Des Moines River Bridge east to east of 6th St NW, STBG-SWAP-2690()--SG-94	2022

The city will continue to implement infrastructure and maintenance improvements as part of its long-range community investment planning and pavement management plan. With these efforts, the City will incorporate ADA-compliant pedestrian facilities and complete accessible infrastructure improvements as needed to ensure access for all users.

Appendix D: Public Outreach Results

I. Appendix D: Public Outreach Results

Input from the community has been gathered and used to help define priority areas for improvements within the City of Fort Dodge public rights-of-way.

Public outreach for the creation of this document consisted of the following activities:

- **Public Open Houses**:

  The City of Fort Dodge held a public open house on XX XXXX, 2024 at the Fort Dodge Public Library to gather input on the state of pedestrian infrastructure in the city and priority preferences for projects moving forward. Comments received during the open house are documented in **Figure D-1** below.

- **Project Website**:

  The project website was live for the duration of the project and provided notifications, contact information, project updates and information, and an interactive grievance procedure in which participants can report on areas in the community that are not accessible. This document was also available for public comment on the website between the dates of XX XXXX, 2024 and XX XXXX, 2024.

- **Outreach to Local Stakeholder Groups:**

  Various community groups were contacted early in the process that include or represent those with disabilities in the Fort Dodge community. Project staff reached out to the following groups during this process:

Assisted Living

- Marian Home and Village
- Friendship Haven
- Bickford of Fort Dodge
- Villa Cottages
- Fort Dodge Health and Rehabilitation

Senior Apartments

- Wahkonsa Manor Apartments
- Garden Village Apartments

Appendix E: ADA Grievance Procedure

I. Appendix E: City of Fort Dodge ADA Grievance Procedure

In accordance with 28 CFR 35.107(b), the city has developed the following ADA grievance procedure for the purpose of the prompt and equitable resolution of citizens' complaints, concerns, comments, and other grievances.

The city understands that members of the public may desire to contact staff to discuss ADA issues without filing a formal grievance. Members of the public wishing to contact the ADA Coordinator should reference the contact information in **Appendix F**. Contacting staff to informally discuss ADA issues is welcome and does not limit a person's ability or right to file a formal grievance later.

Those wishing to file a formal written grievance with the City of Fort Dodge may do so by one of the following methods:

A. Telephone

Contact the City of Fort Dodge's ADA Coordinator listed in the **Contact Information** section of **Appendix F** to submit an oral grievance. The staff person will use the internet to electronically submit the grievance on behalf of the person filing it.

B. Paper Submission

A paper copy of the city's grievance form is available by request from the City of Fort Dodge's ADA Coordinator (contact information in **Appendix F**). Complete the form and submit it to the City of Fort Dodge ADA Coordinator at the address listed.

The city of will acknowledge receipt of the grievance to the citizen within 10 working days of the submission. City staff will then provide a response or resolution to the grievance or will provide information on when the citizen can expect a response. If the grievance filed does not fall within the City of Fort Dodge's jurisdiction, staff will work with the citizen to contact the agency with jurisdiction.

When possible (typically within 60 calendar days or less of the grievance submission) city staff will conduct an investigation to determine the validity of the alleged violation. As a part of the investigation, internal staff will be consulted to fully understand the complaint and possible solutions. The City of Fort Dodge staff will contact the citizen to discuss the investigation and proposed resolution.

The City of Fort Dodge will consider all grievances within its particular context or setting. Furthermore, the department will consider many varying circumstances including: access to applicable services, programs, or facilities; the nature of the disability; essential eligibility requirements for participation; health and safety of others; and degree to which a potential solution would constitute a fundamental alteration to the program, service, or facility, or cause undue hardship to the City of Fort Dodge.

Accordingly, the resolution by the city of Fort Dodge of any one grievance does not constitute a precedent upon which the city is bound or upon which other complaining parties may rely.

Complaints of Title II violations may be filed with the Department of Justice (DOJ) within 180 days of the date of discrimination. In certain situations, cases may be referred to a mediation program sponsored by the DOJ. The DOJ may bring a lawsuit where it has investigated a matter and has been unable to resolve violations.

For more information, contact:

U.S. Department of Justice

Civil Rights Division

950 Pennsylvania Avenue, N.W.

Disability Rights Section – NYAV

Washington, D.C. 20530

www.ada.gov

(800) 514-0301 (voice)

(800) 514-0383 (TTY)

Title II may also be enforced through private lawsuits in Federal court. It is not necessary to file a complaint with the DOJ or any other Federal agency, or to receive a "right-to-sue" letter, before going to court.

File Retention

The City of Fort Dodge shall maintain ADA grievance files on behalf of the city for a period of seven years.

City Fort Dodge, IA ADA Grievance Form

Instructions: Please fill out this form completely and submit to:

City of Fort Dodge, City Engineer
819 1st Ave S,
Fort Dodge, IA 50501

Phone: 515-576-4551
Email: engineering@fortdodgeiowa.org

Complainant – person filing grievance:

Name: _____ Date_____

Address: _____ City, State, Zip Code: _____

Home: _____ Cell: _____

Work: _____ Email: _____

Representing – person claiming an accessibility issue or alleging and ADA violation (if not the complainant):

Name: _____

Address: _____ City, State, Zip Code: _____

Home: _____ Cell: _____

Work: _____ Email: _____

Description and location of the alleged violation and the nature of a remedy sought.

_____

_____

_____

_____

_____

If the complainant has filed the same complaint or grievance with the United States Department of Justice (DOJ), another federal or state civil rights agency, a court, or others, the **name of the agency or court where the complainant filed it and the filing date**.

Agency or Court: _____ Contact Person: _____

Address: _____ City, State, Zip Code: _____

Phone Number: _____ Date Filed: _____

Appendix F: ADA Coordinator Contact Information

I. Appendix F: Responsible Officials and Key Staff

A. Responsible Officials Contact Information

1. City of Fort Dodge ADA Coordinator:

City of Fort Dodge, City Engineer
819 1st Ave S,
Fort Dodge, IA 50501

Phone: 515-576-4551
Email: engineering@fortdodgeiowa.org

Appendix G: ADA Design Standards and Procedures

I. Appendix G: ADA Design Standards and Procedures

A. Design Standards

1. Public Rights-of-Way Accessibility Guidelines

Public Rights-of-Way Accessibility Guidelines (PROWAG), developed by the Access Board, are draft guidelines that address accessibility in the public rights-of-way. Sidewalks, street crossings, and other elements of the public rights-of-way present unique challenges to accessibility for which specific guidance is considered essential. The Access Board is developing these guidelines that will address various issues, including access for visually impaired pedestrians at street crossings, wheelchair access to on-street parking, and various constraints posed by space limitations, roadway design practices, slope, and terrain. PROWAG can be found at https://www.access-board.gov/prowag/sfv.html

2. Proposed Accessibility Guidelines for Pedestrian Facilities in the Public Right-of-Way

The Access Board is proposing these accessibility guidelines for the design, construction, and alteration of pedestrian facilities in the public right-of-way. The guidelines ensure that sidewalks, pedestrian street crossings, pedestrian signals, and other facilities for pedestrian circulation and use constructed or altered in the public right-of-way by state and local governments are readily accessible for pedestrians with disabilities. When the guidelines are adopted, with or without additions and modifications, as accessibility standards in regulations issued by other federal agencies implementing the ADA, Section 504 of the Rehabilitation Act, and the Architectural Barriers Act, compliance with these accessibility standards is mandatory. These proposed accessibility guidelines can be found on the Access Board website (http://www.access-board.gov) under Public Rights-of-Way or at https://www.access-board.gov/prowag/sfv.html

3. Accessible Public Rights-of-Way Planning and Design for Alterations (August 2007)

This report and its recommendations are the work of the Public Rights-of-Way Access Advisory Committee (PROWAAC) – Subcommittee on Technical Assistance and are intended to provide technical assistance only. The report is not a rule and has no legal effect. It has not been endorsed by the U.S. Access Board, the Department of Justice, or the Federal Highway Administration of the Department of Transportation. Still it can be a technical advisory source for engineers and technicians who are planning and designing for alterations to pedestrian elements. This document is on the Access Board website (http://www.access-board.gov) or at https://www.access-board.gov/files/prowag/planning-and-design-for-alterations.pdf

4. Iowa Department of Transportation

Title II of the ADA requires:

- New facilities be designed and constructed such that the facility is "readily accessible to and usable by individuals with disabilities."
- Existing facilities be altered such that the altered portion of the facility "is readily accessible to and usable by individuals with disabilities."

ADA accommodation is considered throughout the development process beginning with the project concept and continuing through final design. This includes working with local officials regarding design considerations and cost sharing when applicable.

In order to address ADA accommodation early in the process, the project concept memorandum includes a section/paragraph on ADA accommodation requirements for the project. The project concept memorandum develops alternatives and recommends a final alternative to carry forward into preliminary design. Project development begins with the completion of the project concept memorandum issued by the Office of Design, Office of Location and Environment, or one of the six district offices.

The following provides guidance to:

- Ensure new pedestrian facilities are designed and constructed to be ADA compliant,
- Bring existing pedestrian facilities into compliance with ADA, and
- Address ADA compliance for pedestrian facilities during construction.

<u>New Pedestrian Facilities</u>

To assist both designers and contractors, the Iowa DOT will provide guidance for designing and constructing ADA-compliant pedestrian facilities.

Guidance for Designers

The Iowa DOT has published specific instructions in Chapter 12 of the Design Manual, which is based on PROWAG – to assist designers with designing ADA-compliant facilities. The guidance is updated as new information from the U.S. Access Board, U.S. Department of Justice, and Federal Highway Administration (FHWA) is released.

Guidance for Contractors

The Iowa DOT will provide contractors with detailed plan sheets for laying out curb ramps and landings to assist contractors with building ADA-compliant facilities. In addition, the Iowa DOT will modify the Standard Specifications when necessary to comply with changes to design standards.

<u>Existing Pedestrian Facilities</u>

The guidance provided in Chapter 12 of the Design Manual also applies to the improvement of existing pedestrian facilities. Existing pedestrian facilities will be brought to ADA compliance by:

- Verifying that features such as sidewalk widths, slopes, surfaces, and changes in level do not violate guidelines,

- Installing or replacing out-of-compliance features such as curb ramps and landings, and
- Installing or replacing detectable warnings.

ADA Accommodation during Construction

When pedestrian facilities are disrupted during construction, detour routes and open walkways (or sidewalks) should provide accessibility in accordance with Design Manual Chapter 12-A4(e) Temporary Pedestrian Facilities.

Additional steps to consider include:

- Detour pedestrians to the next block to avoid the construction area. This could include a change order to use flaggers to keep pedestrians on the detour.
- Place closures at the sidewalks and notify advocacy agencies of the closures as required by Section 2528.01;A910) of the Standard Specifications.
- Install temporary sidewalk.
- Install traffic control devices to channel pedestrians through the construction zone when a detour is not needed.
- Stage the work to minimize the impact to pedestrians and accelerate sidewalk construction.

Chapter 12 of the Iowa DOT Design Manual can be found at https://iowadot.gov/design/design-manual.

5. The Institute for Transportation at Iowa State University - Iowa Statewide Urban Design and Specifications (SUDAS)

The Iowa SUDAS is made up of two parts, a design manual and a specifications manual. The Design Manual is a document written to the engineer developing a specific project. It provides design guidance through references to appropriate national standards and regulations in Iowa. The Design Manual is a direct complement to the SUDAS Standard Specifications. It has been developed and updated with the involvement of engineers from cities, counties, state agencies, and consultants from across the state.

The Specifications Manual is written to the contractor providing specific requirements through the specifications for the contractor to complete the project. These standard specifications were developed with the involvement of engineers and construction industry representatives from across the state. The initial division includes the specific bidding requirements, legal requirements related to public contracts in Iowa, and contractual requirements that must be met to successfully complete the project.

Standard specification details for pedestrian facilities are include in **Appendix G-1** below. The Iowa SUDAS can be found at: https://iowasudas.org/

B. Design Procedures

1. Intersection Corners

The City of Fort Dodge will attempt to construct or upgrade pedestrian curb ramps to be consistent with Access Board recommended designs parameters and Iowa DOT ADA design guidance and procedures to the extent feasible within all capital reconstruction projects. There may be limitations which make it technically infeasible for the city to achieve these goals at an intersection corner within the scope of any project. Those limitations will be noted, and the intersection corners will be constructed to maximize accessibility to the extent feasible within the project scope. As future projects or opportunities arise, additional improvements at these locations may be incorporated into future projects. The city will strive to ensure that each intersection corner is constructed to be as accessible as possible.

2. Sidewalks / Trails

The City of Fort Dodge will attempt to construct or upgrade sidewalks and trails to be consistent with Access Board recommended designs parameters, Iowa DOT ADA design guidance and procedures to the extent feasible within all capital improvement projects. There may be limitations which make it technically infeasible for the city to achieve these goals within all segments of sidewalks or trails within the scope of any project. Those limitations will be noted and those segments will be constructed to maximize accessibility to the extent feasible within the project scope. As future projects or opportunities arise, additional improvements at these locations may be incorporated into future projects. The city will strive to ensure that every sidewalk or trail is constructed to be as accessible as possible.

Appendix G-1. Iowa Statewide Urban Design and Specifications Pedestrian Facility Details

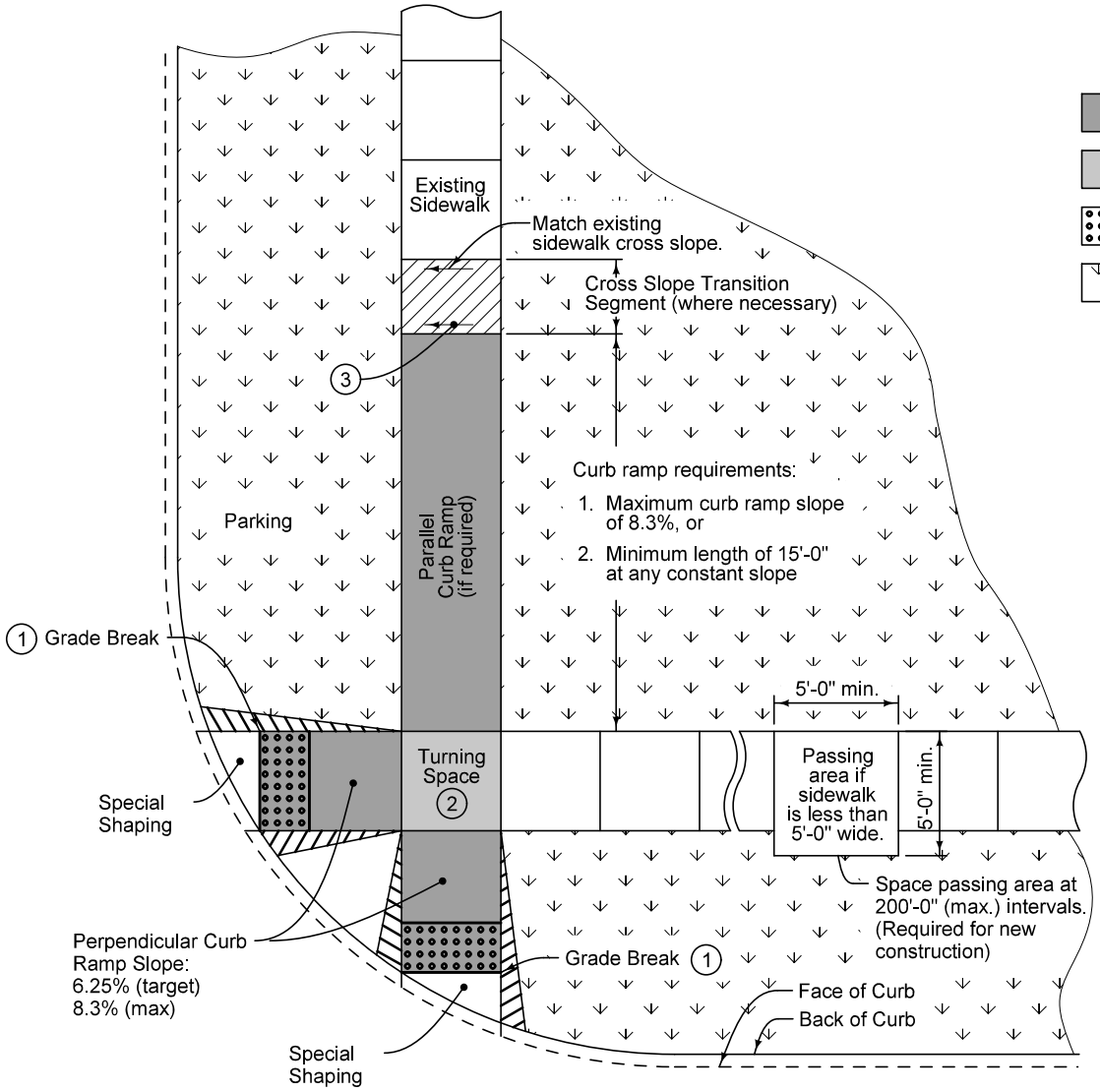

Key

- Curb Ramp
- Turning Space
- Detectable Warning
- Grass

1. Match pedestrian street crossing slope, or flatter.
2. Minimum 4 feet by 4 feet. Target cross slope of 1.5% with a maximum cross slope of 2.0%.
3. Target cross slope of 1.5% with a maximum cross slope of 2.0%.

SUDAS

REVISION	
3	10-20-15

7030.204

SHEET 1 of 1

SUDAS Standard Specifications

GENERAL FEATURES OF AN ACCESSIBLE SIDEWALK

FIGURE 7030.204 | SHEET 1 OF 1

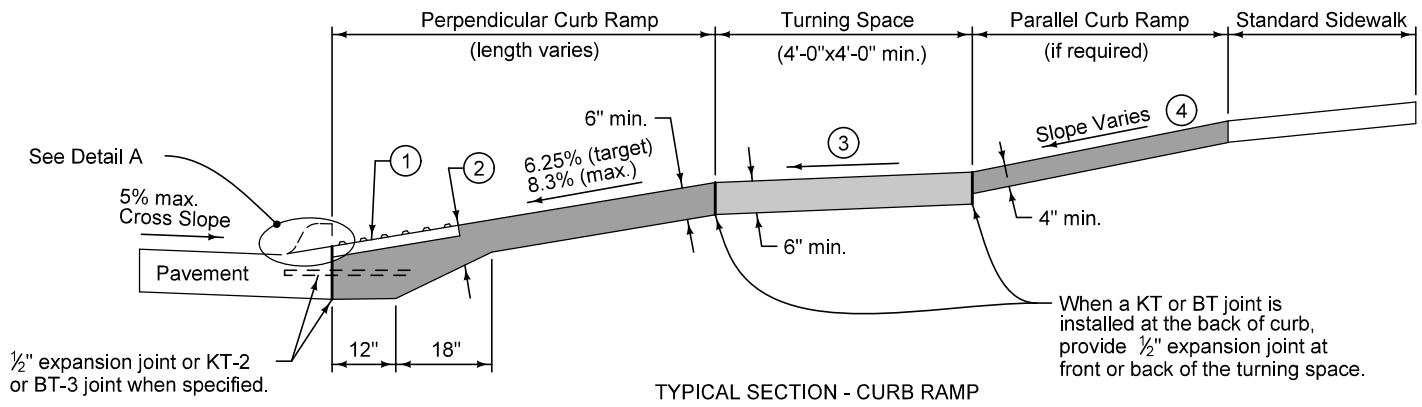

TYPICAL SECTION - CURB RAMP

Key

- Curb Ramp
- Turning Space
- Detectable warning

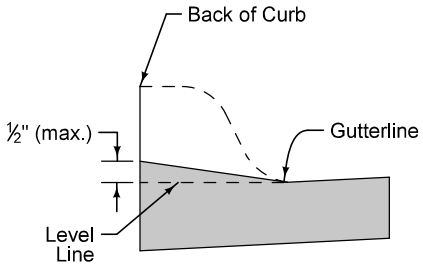

DETAIL A

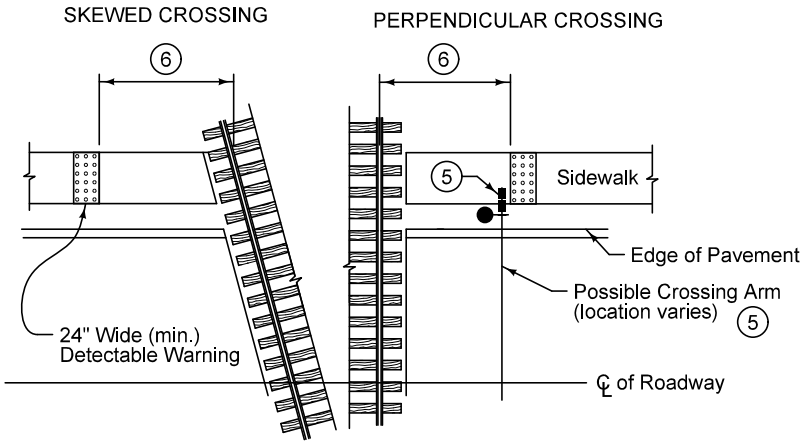

DETECTABLE WARNING LOCATION AT RAILROAD CROSSING

1. Provide a minimum 2 foot width of detectable warning surfaces in the direction of pedestrian travel across the full width of the curb ramp or turning space, exclusive of curbs or flares.
2. Provide a minimum of 6 inches of concrete below the detectable warning panel.
3. Minimum 4 feet by 4 feet. Target cross slope of 1.5% with a maximum cross slope of 2.0%.
4. If normal sidewalk elevation cannot be achieved with the perpendicular ramp between the street and landing due to limited ramp length, provide a parallel ramp to make up the elevation difference between the landing and the standard sidewalk.

   The length of the parallel ramp is not required to exceed 15 feet, regardless of the resulting slope. Do not exceed 8.3% slope for parallel ramps shorter than 15 feet.
5. If crossing gate conflicts with location of detectable warning or if pedestrian crossing gate is provided, place detectable warning panel in advance of the crossing gate.
6. Locate front edge of detectable warning panel 12 to 15 feet from centerline of nearest rail. Orient truncated domes parallel to the direction of pedestrian travel.

SUDAS

REVISION	
1	10-20-15

7030.205

SHEET 1 of 1

SUDAS Standard Specifications

GENERAL SIDEWALK AND CURB RAMP DETAILS

FIGURE 7030.205 | SHEET 1 OF 1

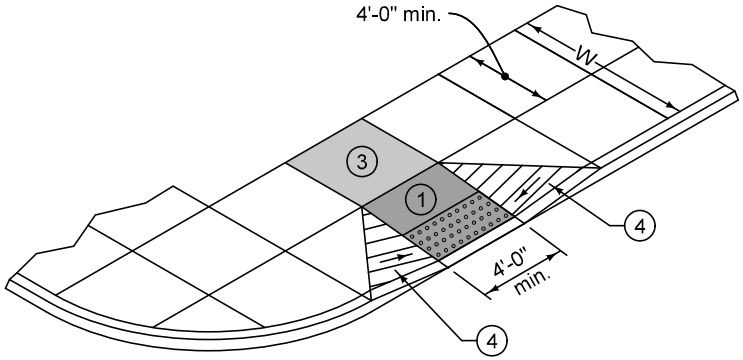

PERPENDICULAR CURB RAMP
(For Class A Sidewalk)

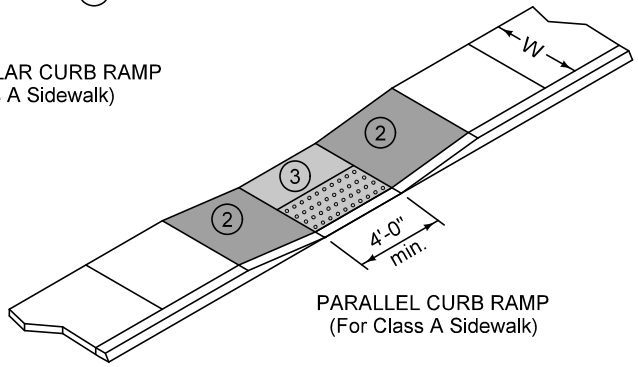

PARALLEL CURB RAMP
(For Class A Sidewalk)

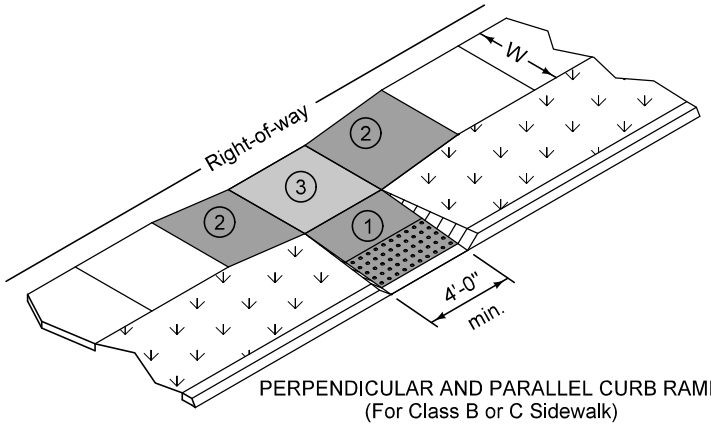

PERPENDICULAR AND PARALLEL CURB RAMP
(For Class B or C Sidewalk)

Key

- Curb Ramp
- Turning Space
- Detectable Warning

1. Perpendicular Curb Ramp: Target running slope of 6.25% with maximum running slope of 8.3%. Match pedestrian street crossing cross slope at back of curb. At mid-block crossings, cross slope may exceed 2.0% to match roadway grade.
2. Parallel Curb Ramp: Target cross slope of 1.5% with a maximum cross slope of 2.0%. The length of the parallel ramp is not required to exceed 15 feet, regardless of resulting slope. Do not exceed 8.3% slope for parallel ramps shorter than 15 feet.
3. Turning Space: Target slope of 1.5%, with a maximum slope perpendicular to the travel directions of 2.0%. At mid-block crossings, cross slope of landing may exceed 2.0% to match roadway grade. Minimum 4 feet by 4 feet.
4. Flare (10:1 max.) required if ramp is contiguous with sidewalk.

SUDAS

REVISION	
New	10-16-12

7030.206

SHEET 1 of 1

SUDAS Standard Specifications

CURB RAMPS OUTSIDE OF INTERSECTION RADIUS

FIGURE 7030.206 | SHEET 1 OF 1

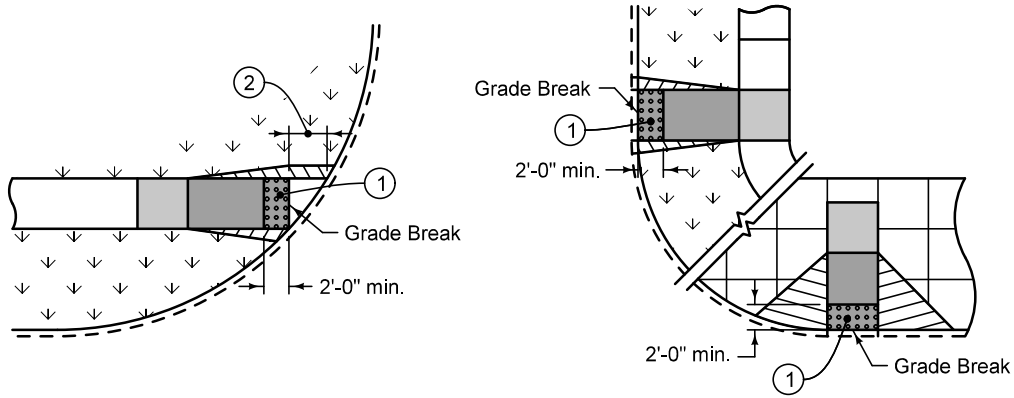

PERPENDICULAR RAMPS

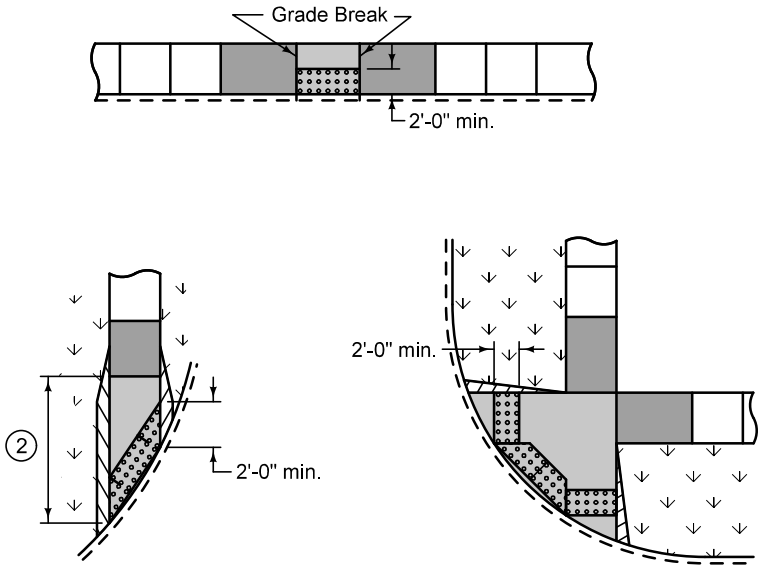

PARALLEL RAMPS

Provide a minimum 2 foot width of detectable warning surfaces in the direction of pedestrian travel across the full width of the curb ramp or turning space, exclusive of curbs or flares.

(1) When detectable warning is located on curb ramp surface, orient domes in the direction of pedestrian travel.

(2) When the distance between the grade break and the back of curb is less than 5 feet, place detectable warning surface at the bottom of the curb ramp.

Where one corner of the curb ramp is more than 5 feet from the back of curb, construct curb ramp as a parallel curb ramp. Move grade break back as required to place detectable warning on turning space at the back of curb.

Key

- Curb Ramp
- Turning Space
- Detectable Warning

SUDAS

REVISION	
New	10-16-12

7030.210

SHEET 1 of 1

SUDAS Standard Specifications

DETECTABLE WARNING PLACEMENT

FIGURE 7030.210 | SHEET 1 OF 1

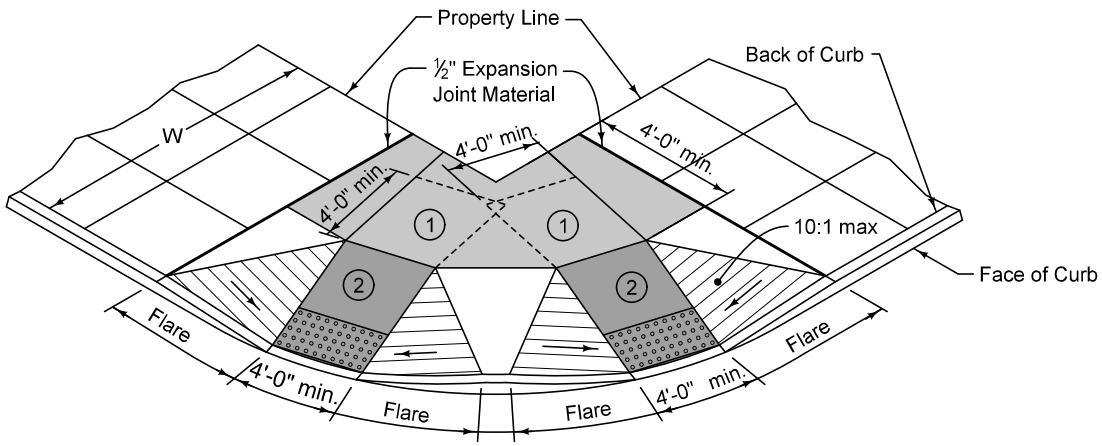

CLASS A SIDEWALK CURB RAMP

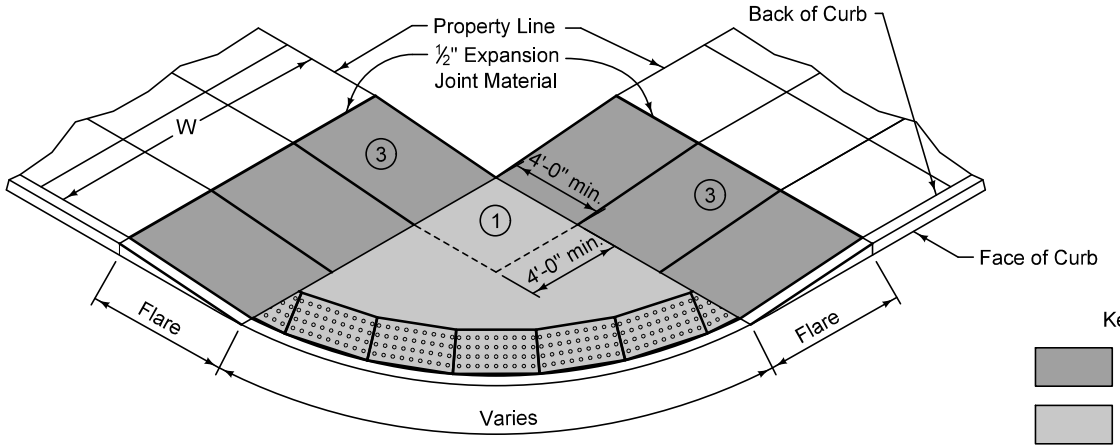

CLASS A SIDEWALK CURB RAMP ALTERNATIVE

Key

- Curb Ramp
- Turning Space
- Detectable Warning

(1) Turning Space: Target slope of 1.5% with maximum slope perpendicular to the travel direction of 2.0%. Minimum 4 feet by 4 feet (turning spaces may overlap).

(2) Perpendicular Curb Ramp: Target running slope of 6.25% with maximum running slope of 8.3%.

(3) Parallel Curb Ramp: Target running slope of 6.25% with maximum running slope of 8.3%. The length of the parallel ramp is not required to exceed 15 feet, regardless of the resulting slope. Do not exceed 8.3% for parallel ramps shorter than 15 feet.

SUDAS

REVISION	
New	10-16-12

7030.209

SHEET 1 of 1

SUDAS Standard Specifications

CURB RAMPS FOR CLASS A SIDEWALK

FIGURE 7030.209 | SHEET 1 OF 1

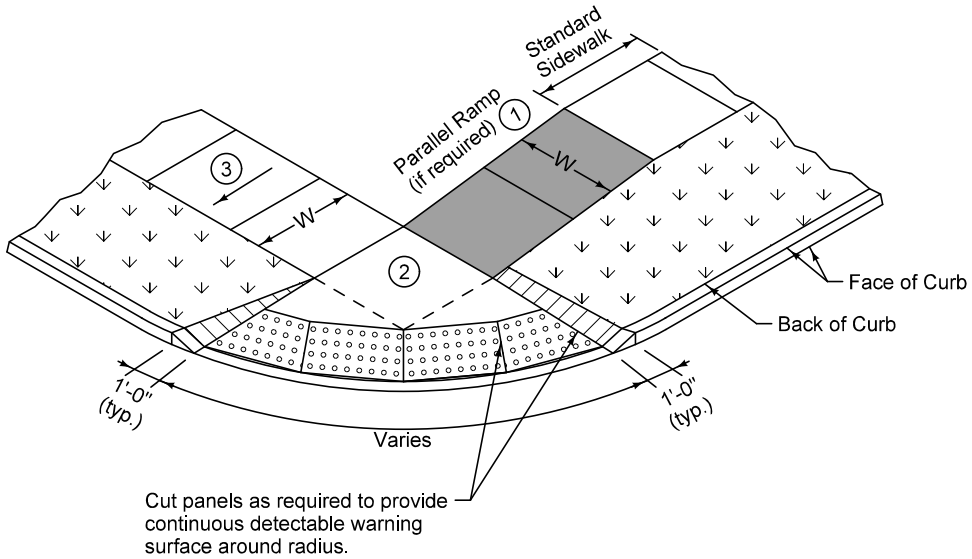

1. Parallel Curb Ramp: If normal sidewalk elevation cannot be achieved with the perpendicular ramp between the street and landing due to limited ramp length, provide a parallel ramp to make up the elevation difference between the landing and the standard sidewalk.

   The length of the parallel ramp is not required to exceed 15 feet, regardless of the resulting slope. Do not exceed 8.3% slope for parallel ramps shorter than 15 feet.

2. Turning Space: Target slope of 1.5% with maximum slope perpendicular to the direction of travel of 2.0%. Minimum 4 feet by 4 feet.

3. Target cross slope of 1.5% with a maximum cross slope of 2.0%.

Key

- Curb Ramp
- Turning Space
- Detectable warning
- Grass

SUDAS

REVISION	
New	10-16-12

7030.208

SHEET 1 of 1

SUDAS Standard Specifications

ALTERNATIVE CURB RAMP FOR CLASS B OR C SIDEWALK

FIGURE 7030.208 | SHEET 1 OF 1

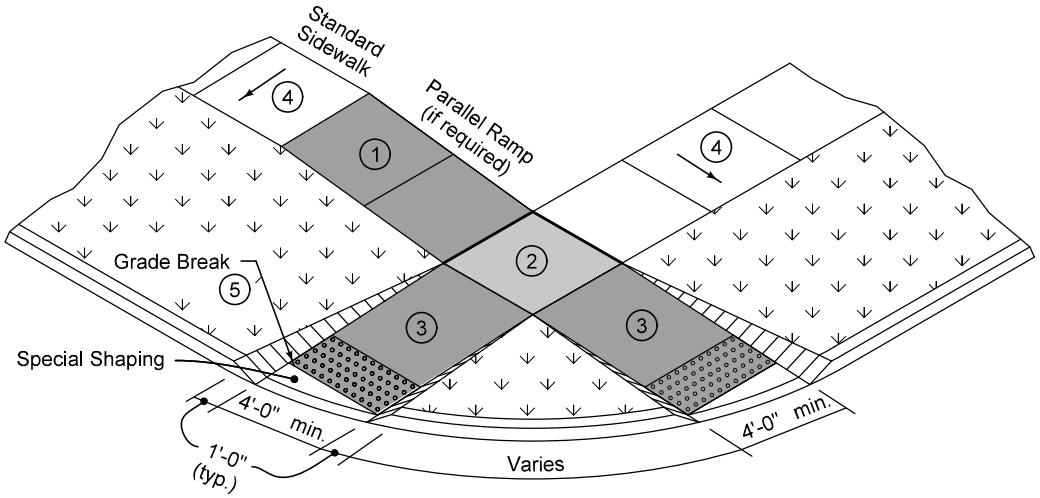

1. Parallel Curb Ramp: If normal sidewalk elevation cannot be achieved with the perpendicular ramp between the street and landing due to limited ramp length, provide a parallel ramp to make up the elevation difference between the landing and the standard sidewalk.

   The length of the parallel ramp is not required to exceed 15 feet, regardless of the resulting slope. Do not exceed 8.3% slope for parallel ramps shorter than 15 feet.

2. Turning Space: Target slope of 1.5% with maximum slope perpendicular to the travel directions of 2.0%. Minimum 4 feet by 4 feet.

3. Perpendicular Curb Ramp: Target running slope of 6.25% with maximum running slope of 8.3%.

4. Target cross slope of 1.5% with a maximum cross slope of 2.0%.

5. Match pedestrian street crossing cross slope or flatter.

Key

- Curb Ramp
- Turning Space
- Detectable warning
- Grass

SUDAS

REVISION	
New	10-16-12

7030.207

SHEET 1 of 1

SUDAS Standard Specifications

CURB RAMP FOR
CLASS B OR C SIDEWALK

FIGURE 7030.207 | SHEET 1 OF 1

I. City of Fort Dodge, IA Review of ADA Policies and Practices

A. Review of Policies and Practices

Policy Recommendations

The city's policies and practices include any city, department, or division policies and practices that direct staff in its daily work activities. Policies and practices that relate to accessibility and ADA conformance include:

1. *Hike & Bike WC Bicycle, Pedestrian, & Trails Master Plan Webster County & Fort Dodge, Iowa (2018)*

   This Plan outlines engineering, ordinances, and guidance for trails, bicycle, and pedestrian travel for users of all ages and abilities regardless of their mode of transportation.

   The following policy language is included under evaluation techniques for the success of trails:

   - ADA Compliance – Compliance with the Americans with Disabilities Act (ADA) is another way to monitor success toward making a walkable community. ADA requirements address details related to moving around in the public realm such as sidewalks, crosswalks, signage, railings, and pedestrian ramps. These types of elements can be improved to make the community safer and more accessible for people of all ages and abilities. Communities may conduct an ADA audit to identify areas needing improvement and track completion of those projects over time.

   This Plan also provides engineering guidelines for crosswalks, bicycle trails on and off street, soft trails and crosswalks in and out of urban areas.

   This plan also reviews existing policies and ordinances in the city and county including Complete Streets, Snow Removal, Bike Parking, Emergency Plan, Bicycle Ordinance, Sidewalk Ordinance, Other Power-Driven Mobility Devices, and Webster County Trail Entrance Permit.

   Policy Understanding and Recommended Revision:

   The following revision to this plan is recommended as part of this review:

   1. Amend the Plan to include policies for the compliant design of pedestrian facilities based on best practices outlined in the Public Rights-of Way Accessibility Guidelines (PROWAG) as adopted by IDOT.

2. *Fort Dodge Comprehensive Plan (2016)*

   a) Chapter 4 – Transportation & Mobility

      This chapter provides immediate goals and policies for promoting and expanding opportunities for safe pedestrian and bicycle traffic. It also calls for

the integration of pedestrian facilities into the design of roadway facilities throughout the community.

Policy Understanding and Recommended Revision:

The following revision to this policy is recommended as part of this review:

1. Amend the Plan to include policies for the compliant design of pedestrian facilities based on best practices outlined in the Public Rights-of Way Accessibility Guidelines (PROWAG) as adopted by IDOT.

3. *Des Moines River And Lizard Creek Water Trails Corridor Plan (2017)*

This plan addresses construction guidelines and design requirements for trails along the Des Moines River and Lizard Creek.

Policy Understanding and Recommended Revision:

The following revision to this policy is recommended as part of this review:

1. Amend the Standard Specifications to include policies for the compliant design of pedestrian facilities based on best practices outlined in the Public Rights-of Way Accessibility Guidelines (PROWAG) as adopted by IDOT.

4. *Northwest River District Neighborhood Revitalization Plan (2016)*

The City of Fort Dodge City Code provides several provisions regarding sidewalk infrastructure including maintenance, responsibilities of property owners and tenants, nuisances to sidewalks, and design specifications for the construction and placement of sidewalks.

Policy Understanding and Recommended Revision:

The following revision to this policy is recommended as part of this review:

2. Amend the Plan to include adherence to ADA standards and guidance as outlined in the Public Rights-of Way Accessibility Guidelines (PROWAG) and IDOT for reconstruction.

5. *City of Fort Dodge Downtown Parking Study (2015)*

This plan addresses parking issues and recommendations in downtown Fort Dodge.

The following parking recommendation is included under
Barrier Free Parking Inventory:

- Along with the ADA parking guidelines it is important to make sure that once a person is
  parked, they will be able to access the sidewalk from where they parked. All i ntersections
  should have sidewalks that are
  barrier free and all lots should have a clear path of access.

Policy Understanding and Recommended Revision:

By adopting the policies in this study, the city is stating that it will design parking facilities according to federal, state, and local standards and guidelines that will accommodate all users regardless of transportation mode.

No barriers to accessibility were identified in this plan/policy.

6. *Fort Dodge Downtown Design Guidelines (2010)*

The City of Fort Dodge Downtown Design Guidelines provide site planning, accessibility and parking for downtown businesses and other establishments in the downtown core district.

Policy Understanding and Recommended Revision:

The following revision to this policy is recommended as part of this review:

3. Amend Downtown Design Guidelines to include adherence to ADA standards and guidance as outlined in the Public Rights-of Way Accessibility Guidelines (PROWAG) and IDOT for site planning, parking, and accessibility.

7. *Fort Dodge Downtown Plan (2008)*

The City of Fort Dodge Downtown Plan outlines a comprehensive plan for downtown revitalization and enhancements to downtown amenities.

Policy Understanding and Recommended Revision:

The following revision to this policy is recommended as part of this review:

4. Amend Downtown Plan to include adherence to ADA standards and guidance as outlined in the Public Rights-of Way Accessibility Guidelines (PROWAG) and IDOT for downtown enhancements and planning.

8. *Business Highway 20/ 5th Avenue Corridors of Commerce Action Plan (2008)*

This plan provides planning and design concepts for the Business Highway 20 loop in Fort Dodge.

Policy Understanding and Recommended Revision:

The following revision to this policy is recommended as part of this review:

5. Amend the Plan to include adherence to ADA standards and guidance as outlined in the Public Rights-of Way Accessibility Guidelines (PROWAG) and IDOT for site planning, parking, and accessibility.

9. *The City of Fort Dodge City Code*

The City of Fort Dodge City Code provides several provisions regarding sidewalk infrastructure including maintenance, responsibilities of property owners and tenants, nuisances to sidewalks, and design specifications for the construction and placement of sidewalks.

Policy Understanding and Recommended Revision:

While the City Code provides actions for sidewalk installation and maintenance, it does not address adherence to ADA compliance or reference to federal/state ADA design standards or guidelines.

The following revision to this policy is recommended as part of this review:

6. Amend City Code Chapter 12 to include adherence to ADA standards and guidance as outlined in the Public Rights-of Way Accessibility Guidelines (PROWAG) and IDOT for reconstruction.

Appendix I: 2014 Traffic Signal Systems Improvement Study

2014 TRAFFIC SIGNAL SYSTEMS IMPROVEMENT STUDY

Fort Dodge, Iowa | August 31, 2017

SNYDER & ASSOCIATES

2014 TRAFFIC SIGNAL SYSTEMS IMPROVEMENT STUDY

Fort Dodge, Iowa | August 31, 2017

Prepared for:

City of Fort Dodge
819 1st Avenue S.
Fort Dodge, Iowa 50501

Snyder & Associates, Inc. Project No. 114.0451

Prepared by:

LICENSED PROFESSIONAL ENGINEER TODD D. KNOX 19530 IOWA	I hereby certify that this Engineering Document was prepared by me or under my direct personal supervision and that I am a duly Licensed Professional Engineer under the Laws of the State of Iowa. Todd D Knox 9/1/17 Todd D. Knox, P.E. Date License Number 19530 My License Renewal Date is December 31, 2018 All

TABLE OF CONTENTS

1. Executive summary 1
2. Introduction 3
3. Traffic Signal Assessment 3
   a. Map/Intersection ID List 3
   b. See included map with intersections identified 3
   c. Review Process 3
   d. General Summary of Needs (with intersection cost estimates) 3
   e. Maintenance Program 5
   f. Emergency Vehicle Preemption 5
4. Safety Audit 6
   a. Review Process 6
   b. Top 10 Intersection Lists 7
   c. General Mitigation Targets by Corridor/Intersection 2
   d. Funding Sources 4
5. Infrastructure Audit 4
   a. Review Process 4
   b. Summary of Needs 5
   c. General Mitigation by Corridor/Intersection 7
6. Operational Review 7
   a. Overview 7
   b. 5th Ave S & Midway Blvd - Signal Warrant Analysis 8
   c. 5th Ave S Corridor 8
   d. 15th St Coordination 9
   e. Flashing Yellow Arrow Conversion 9
   f. Future Design Considerations 10
   g. Future Network/Communication/Traffic Management Needs 10
7. Recommendations 11

LIST OF TABLES

Table 1: Traffic Signal Improvements Cost Opinion 1
Table 2: Safety Improvements Cost Opinion 1
Table 3: Infrastructure Improvements Cost Opinion 2
Table 4: Estimated Signal Improvement Costs 4
Table 5: By Crash Rate 7
Table 6: By Severity Index 7

Table 7: Estimated Safety Improvement Costs 3
Table 8: Estimated Infrastructure Improvement Costs 5

APPENDICES

Inventory documents – 9 pages per intersection
Traffic Counts
Estimated Costs for Itemized Signal Improvements
Breakdown of Signal Improvements by Intersection

Technical Memorandums

- 1st Ave S & 15th St
- 5th Ave S Corridor & Timings
- 5th Ave S & Midway Signal Warrant
- Network Comm & System Needs
- Maintenance Program Appendix B

1. EXECUTIVE SUMMARY

The City of Fort Dodge has a relatively extensive traffic signal system (33 traffic signals and three flasher systems). This study was to provide a current inventory and provide recommendations for updating/upgrading/connecting each traffic signal, perform a safety review to recommend potential improvements, recommend other infrastructure improvements, and other miscellaneous traffic signal performance/operational modifications.

The traffic signal inventory identified several items across the intersection needing to be addressed. These include:

- Replace damaged/ missing/ aged equipment
- Touch-up paint on the signal poles along 5th Ave S
- Implement countdown pedestrian signal heads
- Replace optically limiting heads
- Relocate/ replace signal poles near back-of-curb
- Remove unwarranted traffic signals
- Replace controllers and/ or signal cabinets

Table 1 identifies the estimated cost opinions for all improvements needed for the traffic signals.

Table 1: Traffic Signal Improvements Cost Opinion

	Period for Modification		
	Short-Term (0-2 Years)	**Mid-Term (2-5 Years)**	**Long-Term (5-15 Years)**
Traffic Signal Improvement Total	$230,550	$1,280,850	$810,000

Costs represent current dollars as of date of report. Opinion will require a CIP factor for future funding year.

During the safety audit, eight intersections were identified as both high crash rate and high severity index locations. These include:

- 6th Ave N & N 15th St
- 2nd Ave N & N 15th St
- Central Ave & 15th St
- 5th Ave S & S 15th St
- 5th Ave S & S 25th St
- US Hwy 169 & Kenyon Rd
- 7th Ave N & N 15th St
- Kenyon Rd & Ave C

Safety improvements were identified at these and other signalized intersections. Improvements ranged from installing no turning signs to implementing advance warning flashers to constructing turn lanes. In total, Table 2 estimates the cost opinion for the safety improvements.

Table 2: Safety Improvements Cost Opinion

	Period for Modification		
	Short-Term (0-2 Years)	**Mid-Term (2-5 Years)**	**Long-Term (5-15 Years)**
Safety Improvement Total	$56,000	$102,000	$1,100,000

The infrastructure audit identified various improvements to the studied intersections. Improvements included construction of offset turn lanes, sidewalk modifications, curb/median modifications, and changes to signal

pole locations/foundations. Table 3 summarizes the estimated total cost opinion for the improvements at these intersections.

Table 3: Infrastructure Improvements Cost Opinion

	Period for Modification		
	Short-Term (0-2 Years)	**Mid-Term (2-5 Years)**	**Long-Term (5-15 Years)**
Infrastructure Improvement Total	$43,800	$1,568,000	$1,045,500

Other traffic performance and operational considerations included reviewing traffic signal warrants at 5th Ave S and Midway Blvd (not recommended). Coordination timings were implemented along 5th Ave S. Initial coordination timings were prepared for the 15th St corridor. Discussion was included for conversion of the permissive left turn movements to flashing yellow arrow operation and describing how this could be implemented. Overall communication, future design considerations, and management strategies were included for consideration.

The final recommendations for the study included:

1. Signal Improvements:
   a. Perform annual inspection/maintenance.
   b. Replace damaged/deteriorated equipment.
   c. Inspect damaged signal poles. Replace as needed if cracks are visible.
   d. Develop a strategy to implement countdown pedestrian signal heads.
   e. Install pushbutton activated emergency vehicle preemption system at the Fire Station and connected to 1st Ave S & S 15th St and Central Ave & 15th St signals.
2. Safety Improvements:
   a. Construct left turn lanes on approaches without them.
   b. Remove unwarranted traffic signals.
   c. Convert 15th St to three lanes with a center two-way left turn lane.
   d. Restripe approaches to traffic signals to align left turn lanes.
3. Infrastructure Improvements:
   a. Construct positive offset left turn lanes on high speed, divided approaches.
   b. Construct sidewalks and ramps to signal poles with pedestrian.
   c. Restripe approaches to signals to align left turn lanes across from each other.
   d. Replace/modify traffic signal pole footings to be flush with adjacent sidewalks.
4. Operational Recommendations:
   a. 5th Ave S & Midway Blvd met two traffic signal warrants, but a traffic signal is not recommended to be installed at this time.
   b. Monitor 5th Ave S & 15th St corridors for adjustments to the coordination timings.
   c. Develop a strategy to implement flashing yellow arrow left turn phasing.
   d. Develop a list of standard signal.
   e. Develop a strategy to construct a complete traffic signal communications network including single-mode fiber optic cable and wireless connections.
5. Potential Funding Sources
   a. Traffic Safety Improvement Program (TSIP)
   b. Iowa's Clean Air Attainment Program (ICAAP)
   c. Urban-State Traffic Engineering Program (U-STEP)

2. INTRODUCTION

The City of Fort Dodge selected Snyder & Associates to conduct the Traffic System Improvements Study. The study involved reviewing all existing traffic signals within the City of Fort Dodge. At the time of selection, there were 47 traffic signals and three pedestrian crossings. During the study, 17 of the 18 downtown traffic signals were being removed or replaced as recommended in the Cross-Town Connector Improvements Project report. The final number of signalized intersections included in this project were 30 and three pedestrian crossings.

The project included reviewing all aspects of the traffic signal with an inventory of all existing equipment. Equipment included controller, conflict monitor (malfunction management unit), detection, interconnect, and battery back-up systems. Crash analysis was completed at each location to determine any correlation with operations and geometry. The City Fire Department is having difficulty departing the station along S 15th St and requested a review of preemptive signal equipment to aid in their departure, and recommendations on how to fully connect all traffic signals and pedestrian crossings are included. Each of these includes estimated costs and suggested timeframe for implementation.

3. TRAFFIC SIGNAL ASSESSMENT

a. Map/Intersection ID List

See included map with intersections identified

b. Review Process

The review process began by identifying all signalized intersections and crossings within the city. Staff went to each location to document signal cabinet and equipment installed. The exceptions are the downtown signals along 2nd Ave S, 1st Ave, S, Central Ave, and 1st Ave N as these were in the process of being removed or replaced as a part of downtown construction projects.

The equipment documented within the signal cabinets included controllers (brand, model, and software version if available), controller settings and timings, conflict monitor, detection (inductive loops or video and brand), battery back-up system (if present), and any other equipment located within the cabinet (master controller, telephone connection, etc.). The equipment documented at the intersection included signal poles (length of arm, material, condition), vehicular signal heads (lens configuration, number, condition, optically limiting), pedestrian signal heads (size, condition, countdown timer present), pedestrian pushbuttons and signs, and post-mounted vehicular signs.

c. General Summary of Needs (with intersection cost estimates)

From the inventory data, the recommended improvements for each intersection was assembled and compiled in the appendix. Each intersection had signal equipment that could be updated. Many of the commonly repeated items include:

- Replace damaged/missing/aged equipment (pushbuttons and signs, head visors, backplates, LED lenses)
- Touch-up paint on the signal poles along 5th Ave S
- Implement countdown pedestrian signal heads
- Replace optically limiting heads

- Relocate/replace signal poles near back-of-curb
- Remove unwarranted traffic signals
- Replace controllers and/or signal cabinets

Table 4 is an estimate of the costs per intersection to improve each intersection and an estimated timeframe to make these improvements (see Appendix for full breakdown):

Table 4: Estimated Signal Improvement Costs

Intersection				Period for Modification		
				Short-Term (0-2 Years)	Mid-Term (2-5 Years)	Long-Term (5-15 Years)
101	US Hwy 169	&	Kenyon Rd	$2,700	$30,000	$20,000
102	US Hwy 169	&	Ave O W	$1,100	$2,600	$20,000
103	US Hwy 169	&	Triton Circle	$800	$10,600	-
104	Kenyon Rd	&	Tower Dr	$100	$10,150	$20,000
105	Kenyon Rd	&	Ave E	$8,900	$35,000	-
106	Kenyon Rd	&	Ave C	-	$32,600	-
107	2nd Ave S	&	A St	$6,400	$237,600	-
208	2nd Ave S	&	S 3rd St	$30,400	$60,600	-
209	1st Ave S	&	S 7th St	-	-	-
210	1st Ave S	&	S 8th St	-	-	-
211	1st Ave S	&	S 9th St	-	-	-
212	Central Ave	&	12th St	-	$200,000	-
313	1st Ave S	&	S 15th St	$32,900	$44,000	$50,000
314	Central Ave	&	15th St	$26,400	$44,000	$50,000
315	2nd Ave N	&	N 15th St	$12,400	$44,000	$50,000
316	6th Ave N	&	N 15th St	$3,000	$43,350	$20,000
317	7th Ave N	&	N 15th St	$5,000	$43,350	$20,000
318	20th Ave N	&	N 15th St	-	$3,600	$30,000
419	1st Ave S	&	S 25th St	-	-	-
420	1st Ave S	&	S 29th St	-	-	-
421	1st Ave S	&	S 32nd St	$200	-	$30,000
523	Kenyon Rd	&	S 8th St	$4,450	$3,200	$45,000
524	5th Ave S	&	S 12th St	$5,400	$41,400	$50,000
525	5th Ave S	&	S 15th St	$2,400	$41,400	$50,000
526	5th Ave S	&	S 17th St	$3,400	$41,400	$50,000
527	5th Ave S	&	S 21st St	$2,400	$6,400	$50,000
528	5th Ave S	&	S 25th St	$8,900	$1,000	$30,000
529	5th Ave S	&	S 29th St	$2,600	$1,600	$50,000

Intersection				Period for Modification		
				Short-Term (0-2 Years)	Mid-Term (2-5 Years)	Long-Term (5-15 Years)
530	5th Ave S	&	S 30th St	-	-	$25,000
531	5th Ave S	&	S 31st St	$16,400	-	$50,000
532	5th Ave S	&	S 32nd St	$12,000	$228,000	$50,000
533	5th Ave S	&	Menards	-	-	-
535	5th Ave S	&	S 42nd St/P59	$36,000	$60,000	$50,000
901	Hawkeye Ave	&	2nd St NW	$600	$15,000	-
902	N 32nd St	-	11th/12th Ave N	$700	-	-
903	S 22nd St	@	11th/12th Ave S	$5,000	-	-
Traffic Signal Improvement Total				**$230,550**	**$1,280,850**	**$810,000**

Costs represent current dollars as of date of report. Opinion will require a CIP factor for future funding year.

d. Maintenance Program

A traffic signal maintenance program can be broken into inspection and maintenance. Most equipment at a traffic signal should be inspected on a regular basis, however, only a few should have regular maintenance. A detailed breakdown of an inspection/maintenance program can be found in the appendix technical memorandum, but this is a brief list of some of the items to be inspected regularly:

- Controller clock time and other timing parameters
- Detectors and other equipment functioning properly
- Interconnect equipment sending/receiving signals
- Damage/rust/cracks on signal poles
- Pedestrian pushbuttons working
- Condition of handholes

Most times, maintenance only happens when something fails. The following is a list of typical items that fail requiring maintenance:

- Detectors either provide a constant or lack call from both vehicular or pedestrian traffic
- Load switch in cabinet fails to send power to traffic signal head
- LED or incandescent bulb fails
- Components come loose due to age or weather (in cabinet or on poles)
- Damaged caused by vehicular crash or oversized load
- Component damage due to power surge or lightning

e. Emergency Vehicle Preemption

Upon review of the traffic signals, there was evidence of a traffic signal preemption system previously installed within the city. Older traffic signals have vehicular detectors for an infrared system located on the mast arms. However, most of the cabinet equipment was removed and discussions with the Fire Department indicated that their equipment currently does not have the emitters to send out the signal for the equipment.

During the discussions with the Fire Department, they indicated a desire for emergency vehicular preemption (EVP) at certain locations. They have a need for EVP particularly near the station located along S 15th St between the traffic signals at Central Ave and 1st Ave S. EVP would allow for them to exit the station in a more efficient manner, minimize conflicts and mitigate queues of traffic at either of the adjacent traffic signals. They also indicated a desire for EVP at 5th Ave S & S 15th St due to a regular difficulty turning onto 5th Ave S. They also indicated a desire for EVP at the 1st Ave S & S 25th St and 1st Ave S & S 29th St intersections as there is a lack of space for vehicles to move out of the way for emergency vehicles. The Police Department was contacted about their interest in EVP and they indicated that due to the random locations their officers and vehicles are throughout the city that they don't need EVP at this time.

There are four common EVP systems available: siren activated, infrared detector, GPS based, and radio based. Siren activated systems require emergency vehicles to emit standard, audible sirens to be detected by microphones installed at the intersections (no additional equipment in the emergency vehicles). Infrared detector systems require emitters to be installed on each vehicle that sends a signal out to the approaching intersection (with a detector) for the signal to be preempted (does require line-of-sight). GPS based systems requires additional vehicular and intersection based equipment, however, does not require line-of-sight and can preempt signals based on vehicles turn signals. Radio based systems require additional equipment on the vehicles and at the intersections, but not impacted by the line-of-sight requirement.

Based on the discussions with the Fire Department, the following is a listed of recommended EVP improvements:

For Central Ave & 15th St and 1st Ave S & S 15th St intersections

- Install pushbutton within Fire Station and connect to each intersection via underground cable
- Would provide a set amount of time for green indications at both intersections
- To provide separate northbound green at Central Ave & 15th St, the signal cabinet may need to be rewired to isolate the northbound and southbound movements and install an additional load switch. Once completed, each intersection would only show green going away from the Fire Station.

Other locations within City

- Consider the Siren Activated systems
- There would be no additional equipment to install within each vehicle as long as the sirens emit the proper sirens
- Other agencies could utilize the preempt, especially near the hospital with standard sirens

4. SAFETY AUDIT

a. Review Process

The Iowa DOT crash database was analyzed at each signalized intersection using Crash Mapping Analysis Tool (CMAT) and Safety Analysis, Visualization, and Exploration Resource (SAVER) software. The crash database was reviewed for crashes occurring from 2004 through 2013. Crashes were identified as "intersection related" when it occurred within a set distance from the actual intersection. The distances varied depending on proximity to adjacent signalized intersections and speed limit approaching the intersection: 100 ft surrounding an intersection was selected for the closely spaced intersections, 150 ft was selected for most intersections that were not closely spaced or had high speed approaches, and 250 ft was selected for high speed approach intersections (mostly along US Hwy 169).

From the selected crash data, summaries were prepared for each intersection. These summaries included crash and severity rates, crash types, collision diagrams, major cause summaries, and driver and time summaries. Each of these can be found in the appendix for each intersection. Each intersection was ranked based on intersection crash rates and severity index to identify the locations with the highest potential for crashes. The severity index analyzes how severe the crashes were at an intersection following the method outlined in the Iowa DOT Safety Improvement Candidate Location (SICL) methodology. The rankings were not compared to the SICL ranking as the final SICL ranking was based on a shorter timeframe for crashes and different years. Also the SICL utilized a method that normalized frequency/rates/index based on the highest values and weighted each, giving higher priority to the severity index. The statewide average crash rate for total crashes at an intersection is 0.8 to 1.0 crashes per million entering vehicles (cr/MEV). The State of Iowa currently does not have a published statewide average fatal and injury crash rate (F&I Crashes/MEV).

The crash data was then compared to the existing conditions at each traffic signal to determine appropriate improvements to reduce the potential for crashes.

b. Top 10 Intersection Lists

Table 5: By Crash Rate

Rank	Int ID	Intersection	Crash Rate (cr/MEV)
1	316	6th Ave N & N 15th St	1.26
2	315	2nd Ave N & N 15th St	1.22
3	529	5th Ave S & S 29th St	1.20
4	314	Central Ave & 15th St	1.16
5	525	5th Ave S & S 15th St	1.16
6	528	5th Ave S & S 25th St	1.10
7	101	US Hwy 169 & Kenyon Rd	1.00
8	313	1st Ave S & S 15th St	0.94
9	317	7th Ave N & N 15th St	0.93
10	106	Kenyon Rd & Ave C	0.92
10	527	5th Ave S & S 21st St	0.92

Table 6: By Severity Index

Rank	Int ID	Intersection	Severity Index	Severity Rate (F&I Crashes/MEV)
1	106	Kenyon Rd & Ave C	386	0.32
2	315	2nd Ave N & N 15th St	298	0.38
3	528	5th Ave S & S 25th St	281	0.29
4	101	US Hwy 169 & Kenyon Rd	269	0.40
5	316	6th Ave N & N 15th St	252	0.24
6	525	5th Ave S & S 15th St	169	0.33
7	314	Central Ave & 15th St	163	0.22
8	317	7th Ave N & N 15th St	160	0.37
9	105	Kenyon Rd & Ave E	153	0.18
10	419	1st Ave S & S 25th St	121	0.12

Highlighted intersections are found in both lists

Eight of the 10 intersections identified in one list were also identified in the second list. There is some consistency between high crash rate and high severity. All the intersections identified in the severity index had at least one major injury or fatality (method outlined the first fatality at a location to be reduced to major injury to reduce the influence of an isolated fatality: possible health issues).

Each list identifies at least one intersection along 5th Ave S that has been improved in 2010. Due to the analysis extending back to 2004, the high ranking for these intersections may be due to crash history prior to improvements. If analysis was completed on the rankings since completion of the 5th Ave S improvements, these intersections may not be ranked in the top 10 in either or both categories.

The analysis of all intersections reviewed can be found in the appendix.

c. General Mitigation Targets by Corridor/Intersection

The US Hwy 169 & Kenyon Rd intersection tends to have more crashes that involve northbound vehicles. This could be partially due to railroad underpass US Hwy 169 travels through less than 500 ft from the intersection. An option to improve recognition of the traffic signal would be to install advance traffic signal warning flashers notifying drivers of an upcoming change in control at the traffic signal. This would reduce the potential for northbound related crashes.

The intersections of Kenyon Rd & Tower Dr and Kenyon Rd & Ave C do not have left turn lanes along Kenyon Rd. Crash history at both intersections shows rear-end and left turning related crashes being problematic. Constructing left turn lanes at each intersection would reduce the potential for rear-end crashes and may reduce the potential for left turn related crashes with a safe waiting location for vehicles turning left.

Consider removing the traffic signals at 2nd Ave S & A St and 2nd Ave S & S 3rd St. There are few vehicular crashes occurring at these intersections and traffic volume history tends to indicate that the signals are not warranted. However, sight distances should be reviewed to make sure they are adequate for stop control. For a design speed of 50 mph (45 mph speed limit) on 2nd Ave S, the adequate sight distance for stop control on A St would be 555 ft along 2nd Ave S. It would be advisable to use that same sight distance at S 3rd St due to the change is speed limit being at the west approach to the intersection.

Central Ave & 12th St has a high percentage of crashes involving sideswiping. Upon review, the north approach to the intersection only has 10 ft lane widths for both the through/right turn lane and the left turn lane with an 8 ft parking lane only 40 ft north of the intersection. There is an approximate 18 ft receiving lane, but that shifts 10 ft west at the north end of the left turn lane (100 ft north of the intersection). To increase the southbound lane widths and to maintain parking, the primary options would be to remove the left turn lane or narrow the receiving lane. Removing the left turn lane may not be a good option based on the tire marks visible on aerial imagery (turning movement counts and intersection operational review would be preferred to confirm removal). Narrowing the receiving lane by 4 ft would require an approximate 120 ft taper per current conditions; current distance is approximately 60 ft.

As the rankings indicate, 15th St has a history of crashes, both crash rate and severity. Upon review of the crash frequency along the corridor at the traffic signals, there is some indication of lower frequency of crashes in the last three or four years. However, the type of crashes that occur can be reduced by converting 15th St from the current four-lane undivided street to a three-lane street with a center two-way left turn lane 5th Ave S to 20th Ave N. There are many street and driveway accesses along 15th St from north of 5th Ave S to 11th Ave N, many of which are residential driveways. The crash analysis only reviewed crashes at signalized intersections, yet these crashes indicated the potential benefit of converting the corridor to three lanes. An additional benefit to converting to three lanes is that narrowing the roadway with painted edgelines would provide additional clear zone to fixed objects, such as trees, utility poles, and signal poles. The conversion

could be implemented without modifying the existing traffic signals. The MUTCD does not allow for circular indications over left turn lanes. The current configuration of the traffic signals would allow for the existing signal heads to remain in place as they would likely be over the lane line between the left turn and through lanes, which is acceptable. However, many of the traffic signals show signs of deterioration and damage from being hit by vehicles. Replacing some or all of the traffic signals during this conversion would be advisable.

Several of the minor streets along 15th St and 5th Ave S have designated left turn lanes that do not align across from each other. Many of these intersections only have permissive left turn phasing for these approaches. Since these left turn lanes do not align, there is a potential visibility issue with driver's not being able to see around opposing left turning traffic. Revising pavement markings to align the left turn lanes would increase visibility and safety. If the city continues to desire signal heads located over the center of each approach lane, revising the pavement markings may require traffic signal modifications (possible signal pole/mast arm replacement). In some situations, modifying the pavement markings may require curb replacement/relocation to maintain appropriate lane widths.

Two intersections along 5th Ave S could benefit from constructing turn lanes. A westbound right turn lane could be constructed at S 12th St and east/westbound left turn lanes could be constructed at S 17th St. These turn lanes would reduce the potential for rear-end crashes. There is no westbound left turn lane at S 12th St; however, that movement has little actual turning traffic per counts taken.

Table 7 is an estimate of the costs per intersection to improve each intersection and an estimated timeframe to make these improvements (intersections not listed do not have recommended safety improvements):

Table 7: Estimated Safety Improvement Costs

Intersection	Item	Period for Modification		
		Short-Term (0-2 Years)	Mid-Term (2-5 Years)	Long-Term (5-15 Years)
101 - US Hwy 169 & Kenyon Rd	Implement Advance Warning Flashers - NB	$20,000	-	-
104 - Kenyon Rd & Tower Dr	Construct E/W Left Turn Lanes *	-	-	$400,000
106 - Kenyon Rd & Ave C	Construct Turn Lanes along Kenyon Rd #	-	-	$130,000
107 - 2nd Ave S & A St	Remove Traffic Signal/Install Stop Control	$15,000	-	-
208 - 2nd Ave S & S 3rd St	Remove Traffic Signal	$15,000	-	-
212 - Central Ave & 12th St	Widen Southbound Lanes - Pavement Markings	$5,000	-	-
General - 15th St	Convert to 3 lanes with TWLTL ^	-	$70,000	-
313 - 1st Ave S & S 15th St	Revise Pavement Markings to align E/W Left Turn Lanes +	-	$8,000	-
314 - Central Ave & 15th St	Revise Pavement Markings to align E/W Left Turn Lanes +	-	$8,000	-
315 - 2nd Ave N & N 15th St	Revise Pavement Markings to align E/W Left Turn Lanes +	-	$8,000	-

Intersection	Item	Period for Modification		
		Short-Term (0-2 Years)	Mid-Term (2-5 Years)	Long-Term (5-15 Years)
316 - 6th Ave N & N 15th St	Install No Turn Signs (N/S)	$500	-	-
317 - 7th Ave N & N 15th St	Install No Turn Signs (N/S)	$500	-	-
318 - 20th Ave N & N 15th St	Revise Pavement Markings to align N/S left turn lanes +	-	$8,000	-
523 - Kenyon Rd & S 8th St	Relocate Existing and Install Additional Advance Warning Flashers	-	-	$5,000
524 - 5th Ave S & S 12th St	Construct WB right turn lane ~	-	-	$50,000
526 - 5th Ave S & S 17th St	Construct Left turn lanes E/W `	-	-	$500,000
527 - 5th Ave S & S 21st St	Revise Pavement Markings to align N/S left turn lanes	-	-	$5,000
528 - 5th Ave S & S 25th St	Revise Pavement Markings to align N/S left turn lanes	-	-	$10,000
529 - 5th Ave S & S 29th St	Revise Pavement Markings to align N/S left turn lanes - included in East Region Phase 3	-	-	-
Safety Improvement Total		**$56,000**	**$102,000**	**$1,100,000**

* - Includes new traffic signal # - Includes signal modifications
^ - Pavement Markings Only. Pavement Condition and Traffic Signal modifications could significantly increase cost
\+ - Does not include signal modifications to align signal heads with lanes
~ - Assumes no ROW needed ` - ROW not included in estimate
! - Assumes no Signal Modifications & matches north approach constructed in East Region Phase 2
Costs represent current dollars as of date of report. Opinion will require a CIP factor for future funding year.

d. Funding Sources

Funding for these improvements may be available through the Traffic Safety Improvement Program (TSIP) through the Iowa DOT. Recommended improvements may qualify for funding in two different categories. The crash history along 15th St may qualify these improvements, in particular, for the "site-specific" funding. This category limits eligible projects to a $500,000 max, but requires no local match. It may be possible to create two separate projects/funding applications to receive up to $1,000,000 in funding for improvements. The other category for potential funding would be the "traffic control devices" funding. This category provides funding for purchasing equipment for new or replacement traffic signs or signals; however, the city would be required to pay for the labor to install/replace the equipment.

5. INFRASTRUCTURE AUDIT

a. Review Process

During the traffic signal equipment review, each intersection was inspected for various infrastructural features. These features include approach lanes, sidewalks, parking/bike lanes, intersection/street lighting, post-mounted signing, and any other sight obstructions. These were reviewed to determine compliance concerns or other additional operational/safety improvements.

b. Summary of Needs

There is a variety of needs across the intersections. Some intersections/locations do not need any infrastructural improvements, yet others could benefit from aligning minor street approaches. Table 8 shows the recommended infrastructural improvements at each intersection (intersections not listed do not have recommended improvements).

Table 8: Estimated Infrastructure Improvement Costs

Intersection	Item	Period for Modification		
		Short-Term (0-2 Years)	Mid-Term (2-5 Years)	Long-Term (5-15 Years)
101 - US Hwy 169 & Kenyon Rd	Construct NB offset left turn lane	-	$20,000	-
	Construct E/W offset left turn lanes	-	$40,000	-
102 - US Hwy 169 & Ave O NW	Realign E/W approaches to include left turn lanes	-	$25,000	-
	Construct N/S offset left turn lanes	-	$50,000	-
103 - US Hwy 169 & Triton Circle	Potential improvements to west approach	-	-	-
105 - Kenyon Rd & Ave E	Construct Sidewalks to Pushbutton Locations	$2,000	-	-
	Reconstruct Ramps on Hospital side for ADA Compliance	$400	-	-
106 - Kenyon Rd & Ave C	Construct Sidewalks to Pushbutton Locations	$2,000	-	-
	Extend Sidewalk/Trail to Pushbutton Location - SW Corner	$100	-	-
107 - 2nd Ave S & A St	Construct Sidewalks to Pushbutton Locations	$500	-	-
208 - 2nd Ave S & S 3rd St	Construct Sidewalk Ramps - East Side	$1,800	-	-
212 - Central Ave & 12th St	Construct ADA Sidewalk Ramps	$4,000	-	-
General - 15th St	Convert to 3 lanes with TWLTL ~	-	$1,400,000	-
313 - 1st Ave S & S 15th St	Reconstruct ADA Ramp SE & Construct in NW corners	$1,500	-	-
	Relocate Commercial Driveways	-	$1,500	-
	Pavement Rehabilitation	-	-	$60,000
314 - Central Ave & 15th St	Construct ADA Ramps	$2,500	-	-
315 - 2nd Ave N & N 15th St	Construct ADA Ramps	$3,500	-	-
	Relocate/Reconstruct S-curve	-	-	$750,000
316 - 6th Ave N & N 15th St	Sidewalk Improvements	$2,000	-	-
	Construct ADA Ramps	$3,500	-	-
317 - 7th Ave N & N 15th St	Sidewalk Improvements	$2,000	-	-
	Construct ADA Ramps	$3,500	-	-
	Construct ADA Ramps	$500	-	-

Intersection	Item	Period for Modification		
		Short-Term (0-2 Years)	Mid-Term (2-5 Years)	Long-Term (5-15 Years)
318 - 20th Ave N & N 15th St	Install Lane Designation Signs (E/W Approaches)	$1,000	-	-
	Construct Sidewalks to Pushbuttons	$1,500	-	-
421 - 1st Ave S & S 32nd St	Replace Detectable Warning Panels	$800	-	-
	Reconstruct Corner Radii to Prevent Truck Offtracking	$7,500	-	-
523 - Kenyon Rd & S 8th St	Maintain Curb & Gutter at Sidewalk Ramps	-	-	$10,000
	ADA Sidewalk Improvements to Sidewalk into Park	-	-	$25,000
524 - 5th Ave S & S 12th St	Repair Sidewalks & Ramps (ADA Compliant)	-	$2,500	-
	Remove old parking lot accesses*	-	-	$10,000
525 - 5th Ave S & S 15th St	Repair Sidewalks & Ramps (ADA Compliant)	-	$2,500	-
	Reconstruct Medians for Turning Paths & Pedestrians	-	-	$2,500
526 - 5th Ave S & S 17th St	Install No Parking signs N/S of intersection	$1,200	-	-
	Repair Sidewalks & Ramps (ADA Compliant)	-	$2,500	-
	Revise Pavement Markings to align N/S left turn lanes #	-	-	$8,000
527 - 5th Ave S & S 21st St	Repair Sidewalks & Ramps (ADA Compliant)	-	$2,500	-
	Replace Pole Footings to be Flush with Sidewalk	-	-	$15,000
528 - 5th Ave S & S 25th St	Replace N/S Signal Poles to align with 3-lane configuration ^	-	-	$20,000
	Relocate Signal Poles further from traveled way (clear zone) @	-	-	$40,000
529 - 5th Ave S & S 29th St	Replace Pole Footings to be Flush with Sidewalk	-	-	$10,000
	Relocate Signal poles out of Ped area	-	-	$25,000
530 - 5th Ave S & S 30th St	Replace Pole Footings to be Flush with Sidewalk	-	-	$10,000
531 - 5th Ave S & S 31st St	Replace NW Ramp (ADA Compliant)	-	$1,500	-
532 - 5th Ave S & S 32nd St	Reconstruct South Approach to align with North Approach	-	-	$60,000
535 - 5th Ave S & S 42nd St/Cty Rd P59	Revise Pavement Markings N/S for 3 lanes	-	$10,000	-
902 - N 32nd St Crossing - 11th Ave N	Install Street Light Pole	-	$10,000	-

Intersection	Item	Period for Modification		
		Short-Term (0-2 Years)	Mid-Term (2-5 Years)	Long-Term (5-15 Years)
903 - S 22nd St Mid-Block Signal	Remove Sidewalk paths to crossing and Crosswalk Markings	$2,000	-	-
Infrastructure Improvement Total		**$43,800**	**$1,568,000**	**$1,045,500**

~ - Assumes 20% patching (48,000 SY total), minor signal modifications
* - Will be accomplished if right turn lane is constructed along 5th Ave S
# - Does not include signal modifications to align signal heads with lanes
^ - Accomplished if relocating signal pole for clear zone
@ - Assumes reusing two existing signal poles
Costs represent current dollars as of date of report. Opinion will require a CIP factor for future funding year.

c. General Mitigation by Corridor/Intersection

Improvements along US Hwy 169 are focused on operational improvements. These include constructing offset left turn lanes along US Hwy 169 and aligning/constructing left turn lanes on the side streets. These improvements can be accomplished when pavement rehabilitation or reconstruction occurs, so these should be coordinated with the Iowa DOT. The improvements would be eligible for U-STEP funding through the Iowa DOT. Turn lanes along Kenyon Rd at Tower Dr should be constructed if/when development occurs constructing a south approach to the intersection.

Many other intersections in Fort Dodge have sidewalks/ramps that need improvement. These include constructing ADA compliant pedestrian ramps and sidewalks to pushbuttons. This work should be completed as City funding becomes available.

Most other recommended improvements include replacing curbs to improve turning paths for vehicles and install additional signing to clarify lane designation or parking restrictions. These improvements should be completed as funding becomes available.

6. OPERATIONAL REVIEW

a. Overview

Initially, traffic data, collected by Iowa DOT in 2011, was reviewed. The DOT collected 24-hr counts at various locations along 5th Ave S and 15th St. They also collected turning movement counts at a few signalized intersections. Review of this data indicated that traffic patterns in Fort Dodge are not typical commuter traffic. Traffic volumes in Fort Dodge tend to rise continually in the morning hours until the volumes peak around 12 PM. After 12 PM, the volumes level off and continue at those volumes until around 6 PM. Traffic is mostly balanced along the primary routes with the directional split being between 45/55 and 50/50. Most of the primary routes have less than 5% truck traffic; the exception to this is 5th Ave S east of S 32nd St which has up to 10% truck traffic.

The DOT counts were supplemented with 2014 turning movement counts collected at all traffic signals along 5th Ave S and 15th St. These counts collected seven hours of data, the same periods as the DOT counts, at the busiest intersections and five hours of data at the others. This data is located in the Appendix.

b. 5th Ave S & Midway Blvd - Signal Warrant Analysis

The project included review of the 5th Ave S & Midway Blvd intersection for a potential traffic signal installation. Analysis began by collecting 11 hours of turning movement counts (7 AM to 6 PM) at the intersection (counts are located in the Appendix). The analysis also included review of the crash history at the intersection. This analysis was reviewed against the traffic signal warrants included in the MUTCD to determine if traffic signal installation is recommended. This review indicated that two warrants in the MUTCD were partially met (Warrant 3 - Peak Hour - Delay, volume only for 1.25 hrs and delay was not collected, and Warrant 7 - Crash Experience, met the 5 crashes within a 12 month period in 2009, but not since). However, the MUTCD indicates that even though warrants are met, engineering judgment has to be considered prior to installing a traffic signal. Based on intersection observations and recent conversion of 5th Ave S to three lanes, it is not recommended to install a traffic signal at this intersection at this time. It is recommended to combine driveways to make a north approach to the intersection with the potential to construct a public street north as redevelopment occurs. The full traffic signal warrant analysis can be found in the technical memorandum dated March 13, 2015, included in the appendix.

c. 5th Ave S Corridor

The 5th Ave S corridor is the primary east/west route through Fort Dodge. As such, consistent traffic flow along the corridor is preferred. This project created traffic models of the City, which included 5th Ave S. As a part of creating the models, base signal timings were reviewed from the inventory and updates to yellow, all red, and pedestrian clearance intervals were recommended. From these models, initial coordination timings were recommended. These timing adjustments and other recommendations can be found in the technical memorandum dated January 12, 2015. The initial coordination timings include a single coordination plan. This is based on the review of the traffic patterns and operational analysis.

The initial coordination timings will need to be monitored and adjusted as needed. These coordination timings are based on estimated traffic conditions. The adjustments will provide coordination based on actual traffic conditions. The adjustments could include modifications to intersection offsets and phasing intervals. Detection at each intersection and the communications network along 5th Ave S will need to be monitored and maintained to provide the best possible coordination.

As mentioned earlier in the report, there are other intersection improvements that are recommended along the corridor. Implementing those improvements should include a review of the coordination timings as those improvements offer the opportunity to remove some split phasing at intersections.

There is a gated railroad crossing located east of the 5th Ave S & S 21st St intersection. This railroad crossing is connected to the traffic signal and the traffic signal is preempted when a train crosses 5th Ave S. This preemption allows for the vehicular traffic to clear the train crossing to reduce the likelihood of a crash. The following is a recommended phasing sequence to handle traffic at the 5th Ave S & S 21st St intersection for a train crossing:

- As a train approaches, change to westbound green and let railroad gates stop traffic as needed
- During train crossing, allow the traffic signal to change between northbound, southbound, and westbound traffic
- After train departs (ending railroad preempt), release eastbound traffic with protected left arrow
- If flashing yellow arrow is implemented, could allow for permissive left turn phasing for eastbound traffic during train crossing

d. 15th St Coordination

The 15th St corridor is the primary north/south route through Fort Dodge. As such, consistent traffic flow along the corridor is preferred. This project created traffic models of the City, which included 15th St. As a part of creating the models, base signal timings were reviewed from the inventory and updates to yellow, all red, and pedestrian clearance intervals were recommended. From these models, initial coordination timings were recommended. These timing adjustments and other recommendations can be found in the appendix. The initial coordination timings include a single coordination plan. This is based on the review of the traffic patterns and operational analysis.

The initial coordination timings will need to be monitored and adjusted as needed. These coordination timings are based on estimated traffic conditions. The adjustments will provide coordination based on actual traffic conditions. The adjustments could include modifications to intersection offsets and phasing intervals. Detection at each intersection and the communications network along 15th St will need to be monitored and maintained to provide the best possible coordination. The communication network should be updated to a fiber optic network for optimal communications. This update can occur when other roadway improvements are constructed.

As mentioned earlier in the report, there are other intersection improvements that are recommended along the corridor. Implementing those improvements should include a review of the coordination timings as those improvements offer the opportunity to remove some split phasing at intersections.

e. Flashing Yellow Arrow Conversion

The MUTCD does not allow for the installation of circular indications over left turn lanes beginning in the 2009 Edition (and adopted by the Iowa DOT and stated in the Iowa Code). These circular indications do not need to be removed until modifications are made to the traffic signal. However, driver expectancy should be considered with the installation of flashing yellow arrow indications at a few new traffic signals. A program should be created to implement flashing yellow arrow at intersections along a corridor.

Converting/replacing the existing three- or five-section signal head is not the only change necessary to convert a traffic signal to include flashing yellow arrow. That may be the most noticeable change, with removing the adjacent “Left Turn Yield on Green” sign; however, additional cable may need to be pulled to the signal pole to accommodate the change in indications. If there is insufficient space within the existing conduit to the signal pole, an additional conduit may need to be installed as well. The additional wire is needed to separate red, solid yellow, and permissive green indications that are typically wired to the adjacent through red, yellow, and green indications. To not need additional cable, there would need to be at least 12 existing conductors to the cabinet to account for the vehicular and pedestrian movements.

The signal cabinet would need to be modified to accommodate this additional wire or potentially reassign wiring if sufficient wire exists. The existing cabinet could be reused if there were at least 12 backpanel positions (cabinet would need to be rewired/reprogrammed to utilize the spare load switch position from the pedestrian load switches). If there is any equipment utilizing one of the load switch positions (confirmation light for EVP), then the 12 position backpanel would not be sufficient and need to be replaced. If the controller is not a Siemens M50 (or newer), Peek ATC-1000, or Econolite ATC/3 (or newer), it likely needs a software update or be replaced. Siemens M40s and older are not being supported by the local supplier and those are the most common controller within the City of Fort Dodge. Besides the controller and backpanel, the

malfunction management unit (or conflict monitor) will either need to be reprogrammed or replaced to accommodate flashing yellow arrow indications. If there are spare backpanel positions, then load switches may be needed as well. Battery back-up systems, detection (unless needing to isolate left turn lanes), interconnect equipment, and power supply would be the existing cabinet equipment not impacted by implementing flashing yellow arrow left turn phasing.

The estimated cost to implement flashing yellow arrow indications at a four-approach intersection is $30,000. This includes replacing the signal cabinet, signal head modifications, and additional cable to the signal poles.

f. Future Design Considerations

The City has three different brands of signal controllers throughout. As the controllers change in the cabinets, most other equipment changes based on what the controller supplier represents. This other equipment includes malfunction management units (MMU, conflict monitor), detection amplifiers, load switches, and battery back-up systems. All the equipment is similar; however, there are variations on how to maintain each. This requires additional time and knowledge by maintenance staff. Similar to controllers, the City has three or more brands of video detection, each with different methods to update/maintain detection.

It is advisable to minimize these differences. To accomplish this, selecting a single controller brand would make future maintenance less difficult for timing changes and general cabinet maintenance. Also selecting a single brand of video detection would remove variability in maintenance.

Nationally, there have been strides to convert all pedestrian pushbuttons to be ADA/PROWAG compliant. This means additional cabinet/intersection equipment and more technology at the pushbutton. Implementation at an intersection can cost between $10,000 and $30,000 depending on the necessary equipment and location of the pushbuttons. The City should consider creating a policy to determine if/when to implement ADA/PROWAG compliant pedestrian pushbuttons.

There are some other design considerations the City needs to consider.

- The City seems to be installing black signal poles with a decorative luminaire; is this going to be utilized throughout the city or just in select locations?
- The pedestrian heads vary between separated (2-piece) walk/don't walk indications to a single (1-piece) head that contains both with a countdown timer. The countdown timer is required by the MUTCD, but can be accomplished with a 2-piece signal head. Either head configuration is acceptable, but for consistency and easier maintenance, one head configuration should be selected.
- The City should identify a particular style for street name signs for either consistency throughout the city or separate regions of the city.

g. Future Network/Communication/Traffic Management Needs

The City has some connectivity to the majority of the existing traffic signal network. This connectivity utilizes copper cable, single-mode, and multi-mode fiber optic cable. The City should work towards complete network connecting each traffic signal to a central computer or management software. The signal industry has been moving towards more of an Ethernet based communication utilizing wireless or single-mode fiber cables. The existing network can be upgraded to provide the Ethernet based communication with additional equipment installed within the signal cabinets. A technical memorandum dated July 29, 2015 documents the recommended communications network in detail.

Adaptive signal technology can provide flexible signal programming and yet maintain some coordination on the major street. This technology needs a complete network to fully communicate to each traffic signal cabinet. Typically this technology needs additional staff time to maintain fully functioning traffic signals and ability to monitor the system regularly. Adaptive signal technology requires a Systems Engineering study to be completed prior to receiving federal funding. A Systems Engineering study will aid in determining the necessary components of adaptive signal technology that should benefit the city.

All the communication improvements can apply for Iowa Clean Air Attainment Program (ICAAP) funding, which is federal funding. ICAAP requires the applicant to document reduction in vehicle emissions, which can be achieved through improved intersection/corridor operations.

7. RECOMMENDATIONS

The following is a brief summary of some of the recommended improvements, in general, at the existing traffic signals in Fort Dodge:

1. Signal Improvements:
   a. Perform annual inspection/maintenance.
      i. Maintain existing detection for optimal signal performance.
   b. Replace damaged/deteriorated equipment.
      i. Traffic signs, pedestrian pushbuttons and signs, signal head visors, etc.
   c. Inspect damaged signal poles. Replace as needed if cracks are visible.
   d. Develop a strategy to implement countdown pedestrian signal heads throughout the City. Must replace existing pedestrian signal heads with countdown versions as they fail.
   e. Install a pushbutton activated emergency vehicle preemption system at the Fire Station and connected to 1st Ave S & S 15th St and Central Ave & 15th St traffic signals.
2. Safety Improvements:
   a. Construct left turn lanes on approaches without them.
   b. Remove unwarranted traffic signals.
   c. Convert 15th St to three lanes with a center two-way left turn lane.
   d. Restripe approaches to traffic signals to align left turn lanes across from each other, especially on the minor approaches.
3. Infrastructure Improvements:
   a. Construct positive offset left turn lanes on high speed, divided approaches to increase visibility and allow for permissive left turn phasing.
   b. Construct sidewalks and ramps to signal poles with pedestrian pushbuttons and at other pedestrian crossing locations at traffic signals.
   c. Restripe approaches to traffic signals to align left turn lanes across from each other, especially on the minor approaches.
   d. Replace/modify (if possible) traffic signal pole footings to be flush with adjacent sidewalks.
4. Operational Recommendations:
   a. 5th Ave S & Midway Blvd met two traffic signal warrants, but a traffic signal is not recommended to be installed at this time.
   b. Monitor 5th Ave S and 15th St corridors for adjustments to the coordination timings.
   c. Develop a strategy to implement flashing yellow arrow left turn phasing throughout the City. Plan could include converting 3-6 intersections per year and as other signal projects occur.
   d. Develop a list of standard signal equipment to utilize for each new or updated traffic signal.

e. Develop a strategy to construct a complete traffic signal communications network including single-mode fiber optic cable and wireless connections.

5. Potential Funding Sources
   a. Traffic Safety Improvement Program (TSIP)
      i. Application Deadline - August 15th each year
      ii. Max Funding - $500,000 for site specific improvements
      iii. Funding through Iowa DOT
      iv. No local match required
   b. Iowa's Clean Air Attainment Program (ICAAP)
      i. Application Deadline - October 1 each year (to the Iowa DOT, may be earlier if local RPA/MPO requests submittal to them first)
      ii. Max Funding - no max, typical projects awarded $750,000 or less
      iii. Funding through Iowa DOT using Federal funding
      iv. 20% local match required
   c. Urban-State Traffic Engineering Program (U-STEP)
      i. Application Deadline - submit throughout the year for consideration
      ii. Only applicable to State/US Highway intersections with local streets
      iii. Max Funding - $200,000 (spot) or $400,000 (linear)
      iv. Funding through Iowa DOT
      v. 45% local match required

APPENDIX

Inventory documents – 9 pages per intersection
Traffic Counts
Estimated Costs for Itemized Signal Improvements
Breakdown of Signal Improvements by Intersection

Technical Memorandums

- 1st Ave S & 15th St
- 5th Ave S Corridor & Timings
- 5th Ave S & Midway Signal Warrant
- Network Comm & System Needs
- Maintenance Program

Appendix

Inventory documents – 9 pages per intersection
Traffic Counts
Estimated Costs for Itemized Signal Improvements
Breakdown of Signal Improvements by Intersection

Technical Memorandums

- 1st Ave S & 15th St
- 5th Ave S Corridor & Timings
- 5th Ave S & Midway Signal Warrant
- Network Comm & System Needs
- Maintenance Program

Click on description to be taken to location.

CLICK TO RETURN TO INDEX PAGE

Click on intersection to be taken to location.

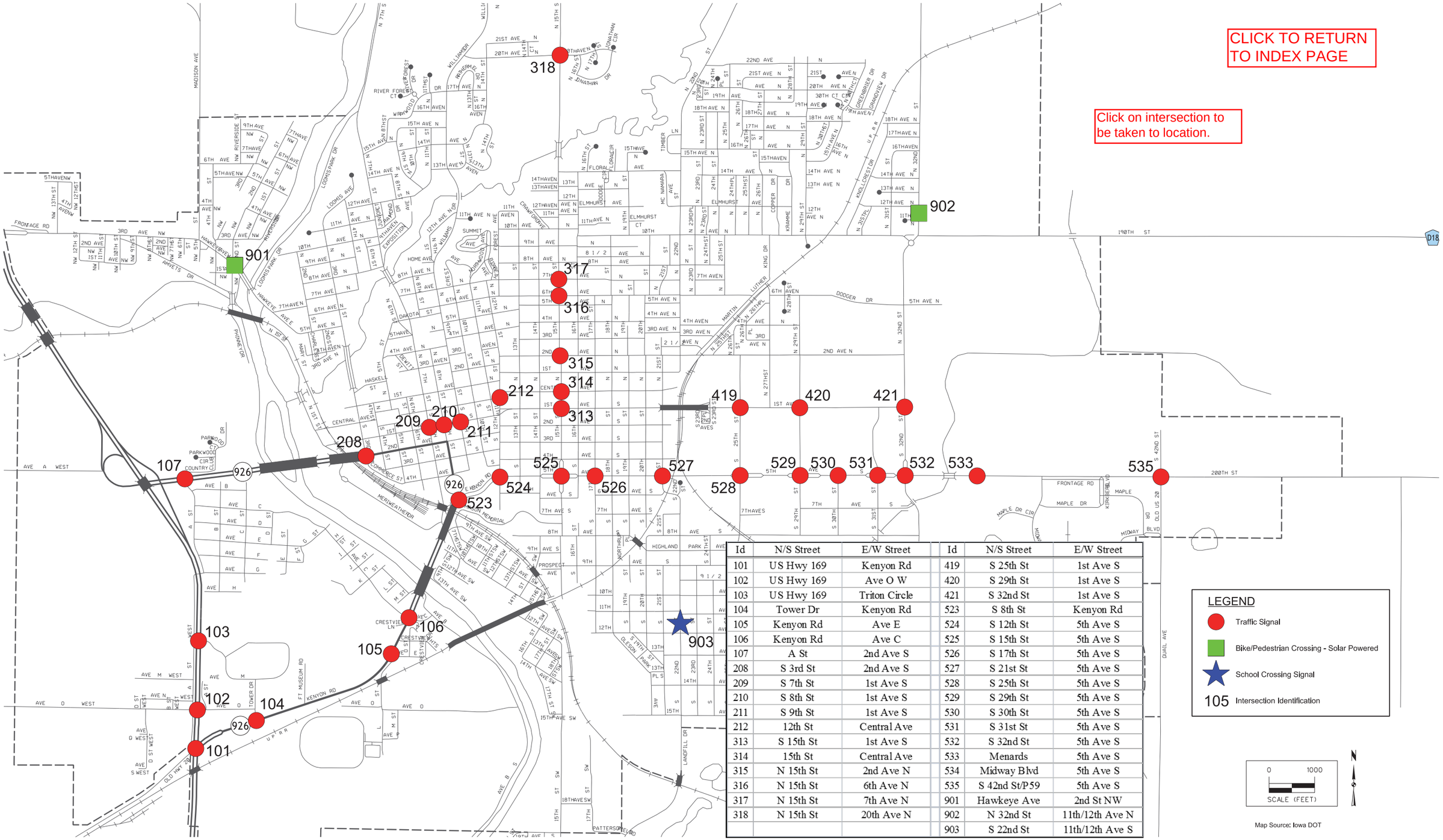

Id	N/S Street	E/W Street	Id	N/S Street	E/W Street
101	US Hwy 169	Kenyon Rd	419	S 25th St	1st Ave S
102	US Hwy 169	Ave O W	420	S 29th St	1st Ave S
103	US Hwy 169	Triton Circle	421	S 32nd St	1st Ave S
104	Tower Dr	Kenyon Rd	523	S 8th St	Kenyon Rd
105	Kenyon Rd	Ave E	524	S 12th St	5th Ave S
106	Kenyon Rd	Ave C	525	S 15th St	5th Ave S
107	A St	2nd Ave S	526	S 17th St	5th Ave S
208	S 3rd St	2nd Ave S	527	S 21st St	5th Ave S
209	S 7th St	1st Ave S	528	S 25th St	5th Ave S
210	S 8th St	1st Ave S	529	S 29th St	5th Ave S
211	S 9th St	1st Ave S	530	S 30th St	5th Ave S
212	12th St	Central Ave	531	S 31st St	5th Ave S
313	S 15th St	1st Ave S	532	S 32nd St	5th Ave S
314	15th St	Central Ave	533	Menards	5th Ave S
315	N 15th St	2nd Ave N	534	Midway Blvd	5th Ave S
316	N 15th St	6th Ave N	535	S 42nd St/P59	5th Ave S
317	N 15th St	7th Ave N	901	Hawkeye Ave	2nd St NW
318	N 15th St	20th Ave N	902	N 32nd St	11th/12th Ave N
			903	S 22nd St	11th/12th Ave S

Existing Traffic Signal Locations
Traffic Systems Improvement Study
Fort Dodge, Iowa

Figure 1

SNYDER & ASSOCIATES
Engineers and Planners

1:2000 Snyder Y:\print_drivers\Color\V8\ColorHalf\Postscript\plt.cfg J:\2014_Projects\114.0451\Cadd\Traffic_Signal\Locations.dgn 7/14/2015 TDK

CLICK TO RETURN TO SIGNAL LOCATION MAP

Intersection: US Hwy 169 & Kenyon Rd ID#: 101

Intersection: US Hwy 169 & Kenyon Rd ID#: 101

Signal Evaluation	MUTCD Issues
1. PEEK 3000 Series signal controller 2. Inductive Loop Detection - Peek Card Rack Amplifiers 3. Protected/permissive left turn phasing on US Hwy 169; split phasing on Kenyon Rd 4. Has a fiber optic distribution panel with jumpers to the signal controller. Connects to two directions. 5. There are only 2 signal poles, but each has signal heads for two directions. 6. Does have battery back-up system.	1. Have circular indications over left turn lanes. Acceptable per previous MUTCD. Should be changed to flashing yellow arrow (arrow only heads) to comply with 2009 Edition. 2. Update clearance intervals (yellow and red) to current standards of practice

Misc. Comments

1. The fiber optic cable indicates communication with two adjacent signals, likely US Hwy 169 & Ave O W and Kenyon Rd & Tower Dr.
2. Split phasing was implemented years ago for east/west traffic. The likely reason was for safety due to the angle of the intersection, high posted speeds, and the negative offset of the left turn lanes. It may be possible to remove the split phasing by constructing positive offset left turn lanes. However, the vehicle turning paths off of US Hwy 169 would require the Kenyon Rd left turning traffic to stop 30 ft or more further from the intersection, increasing the red clearance interval.

Budget Needs

Intersection	Item	Period for Modification		
		Short-Term (0-2 Years)	Mid-Term (2-5 Years)	Long-Term (5-15 Years)
US Hwy 169 & Kenyon Rd	Replace Missing Visor	$100		
	Install Street Name Signs	$2,600		
	Implement Flashing Yellow Arrows		$30,000	
	Replace/Upgrade Controller and Cabinet			$20,000
	Yearly Maintenance	$800	$1,200	$4,000
Total		$3,500	$31,200	$24,000

SIGNAL EQUIPMENT DATA

INTERSECTION: US HWY 169 and Kenyon Rd

DATE: 7/2/14

POWER: Underground

ZONE: 1

ID: 101

CONTROLLER:
BRAND: Peek Traffic
MODEL: 3000 Series

SOFTWARE VER: 5921 V 3.6 (9/22)

DETECTORS:
LOOP: Peek Traffic

VIDEO: None

PUSHBUTTONS: None

POLE DATA

POLE NO.	POLE TYPE	POLE MATL.	TYPE OF BASE	ARM LENGTH / PEDSTL. HEIGHT		REMARKS
1	3	2		70		Both poles have lights for 2 separate directions
2	1	2		70		

POLE TYPE
1. SINGLE MAST ARM
2. TWIN MAST ARM
3. COMBINATION
4. PEDESTAL
5. UTILITY
6. OTHER

POLE MATL.
1. ALUMINUM
2. STEEL
3. WOOD
4. OTHER

TYPE OF BASE
1. PLATE
2. STEEL TRANSFORMER
3. ALUM. TRANSFORMER

AUXILIARY EQUIPMENT

VIDEO: None

CONFLICT MONITOR: EDI MMU-16

DETECTOR AMP

COMMUNICATION

PRE-EMPTION

BATTERY BACK-UP:
Alpha Systems
-FXM 1100 (S/N F19019)
-Alpha Guard
-4 Batteries

SIGNAL TIMING DATA

INTERSECTION: US HWY 169 and Kenyon Rd
CONTROLLER: Peek Traffic
DATE: 7/2/14 - Existing Timings

Basic Timing Data

	Ph1 - WB	Ph2 - EB	Ph3 -SBL	Ph4 - NB	Ph5 -	Ph6 -	Ph7 -NBL	Ph8 - SB	
Min Grn	10	10	0	15			0	15	*Initial
Passage	8.0	5.0	5.0	5.0			8.5	10.0	
Max 1	30	30	30	30			30	30	
Max 2	30	30	30	30			30	30	
Yellow	4.5	4.5	4.0	4.0			4.0	4.0	
Red Clr	1.0	1.0	1.0	1.0			1.0	1.0	
Walk									
Ped Clear									
Recall				Min				Min	
Lock/Non	Non		Non				Non		
Act/Non-Act									

Coordination Plan Data

Free, Local TOD Circuit

Values %(0-100)

Dial 1/Split 1 Cycle: 72 Offset: 31

Phase	1	2	3	4	5	6	7	8
Time		40	20	40			20	40
Mode								

Active Periods: All Day, Every Day

Dial 2/Split 1 Cycle: Offset:

Phase	1	2	3	4	5	6	7	8
Time								
Mode								

Active Periods:

Dial 3/Split 1 Cycle: Offset:

Phase	1	2	3	4	5	6	7	8
Time								
Mode								

Active Periods:

Phasing

N

INDICATE NORTH

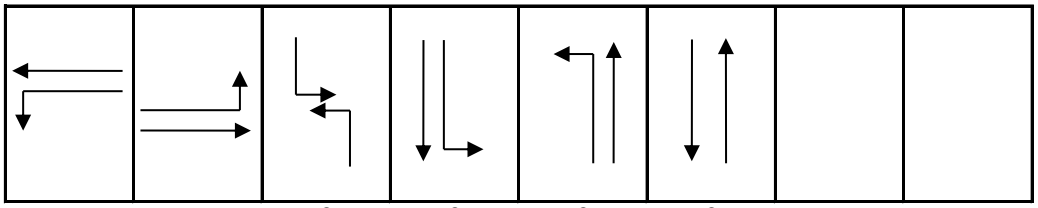

1 2 3 & 8 4 & 7 3 & 8 4 & 8

City of Fort Dodge Bus 20 + Hwy 169 101

SIGNAL LAYOUT:

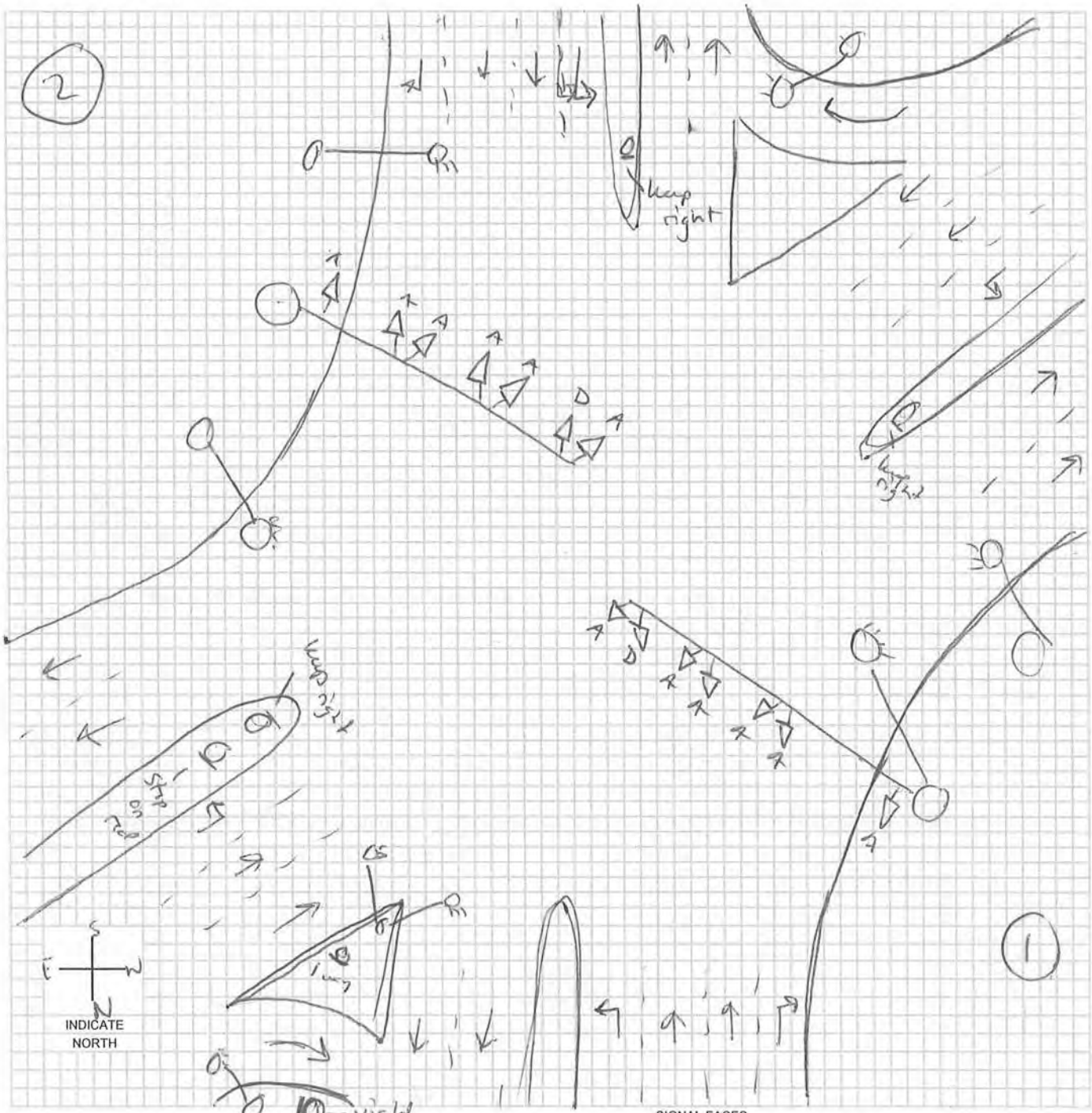

SIGNAL FACES

A	B	C	D	E	F	G	H	I	J	K	L	M	O
12 R	12 R	12 R	12 R	12 R	12 R	12 R	12 R	12 R	12 R	DW	W/DW	W DW	
12 Y	12 Y / 12 Y	12 Y	12 Y	12 Y	12 Y	12 Y	12 Y	12 Y	12 Y	W	CD		
12 G	12 G / 12 G	12 G	12 G	12 G	12 G	12 G	12 FY	12 G	12 G			N: W CD DW	
		12 G	12 Y				12 G	12 G	12 Y				
			12 G						12 G				

LEGEND
- (7) POLE & NUMBER
- SIGNAL INDICATION
- PEDESTRIAN SIGNAL INDICATION
- PB PUSHBUTTON
- 00-00-PD LOOP DECTETOR
- DISTANCE FROM STOP LINE - AREA OF DETECTION - PRESENCE PR; PULSE P; DELAY D; NO DELAY ND; EXTENSION E
- CONTROLLER
- (M) METER
- VIDEO DET CAMERA

-* OPTICALLY PROGRAMMABLE

Intersection: US Hwy 169 & Kenyon Rd ID #: 101

Crash Summary	**Trends**
1. Crash rate is at statewide average (1.0 crashes/MEV) 2. 23 of 57 crashes were injury crashes. There were 2 major injury crashes. 3. Ran traffic signal (30%) was reported most frequently as the major cause (19 crashes indicated the surface condition was wet, ice, snow, or slush) 4. Two vehicles were reported as striking a fixed object: a ditch (1) and a pole (1). 5. 51% of the crashes occurred between 6 AM and 12 PM. 6. 30% of the drivers involved in the crashes were under the age of 30.	1. From 2004 to 2009, the intersection experienced between 5 and 8 crashes per year. From 2010 to 2013, it experienced between 3 and 6 crashes, only 2011 had 6 crashes. 2. 75% of crashes were right-angle/broadside or rear-end crashes. 3. 50% of the crashes involved a northbound vehicle (continues in most recent 5 years of crash history).

Mitigation Options / Potential Improvements

1. Implement advance warning flashers for northbound traffic. Due to the grade separated railroad crossing, visibility of the traffic signal is limited to approximately 700 ft from the intersection. This distance is adequate, but there is a high percentage of crashes involving northbound vehicles. Installing advance warning flashers would give drivers additional warning of the traffic signal changing.

Funding Potential

1. Beyond GO bonds, TSIP is a potential funding source. Implementing advance warning flashers may qualify for "traffic control device" funding which will provide funds to purchase the equipment. The City would be responsible for installation labor.

Cost Opinion

Intersection	Item	Period for Modification		
		Short-Term (0-2 Year)	Mid-Term (2-5 Years)	Long-Term (5-15 Years)
US Hwy 169 & Kenyon Rd	Implement Advance Warning Flashers	$20,000		
Total		$20,000		

Intersection Crash Summary

Location: US Hwy 169 and Kenyon Road
City/County: Fort Dodge, Webster County
Time Period: 2004-May 2014 Crash Period = 10.5 years
Prepared by: OMV

NUMBER OF CRASHES

0	Fatal Crashes	0 fatalities	0 injuries
2	Major Injury Crashes		2 injuries
4	Minor Injury Crashes		5 injuries
17	Possible/Unknown Injury Crashes		19 injuries
34	Property Damage Only Crashes		
Totals: 57	Crashes	0 fatalities	26 injuries

CRASH RATES

Total Crash Rate =	57	/	56.91 MEV	=	1.00 Total Crashes/MEV
Fatal Crash Rate =	0	/	56.91 MEV	=	0.00 Fatal Crashes/MEV
Fatal/Injury Crash Rate =	23	/	56.91 MEV	=	0.40 F & I Crashes/MEV

CRASH FREQUENCY

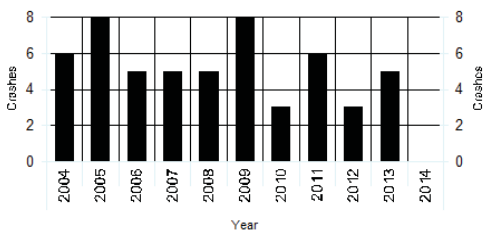

CRASH TYPE

0	Head-on	4	Sideswipe, Same Direction	Non Vehicle Collision Type	
20	Rear-end Crash	3	Sideswipe, Opposite Direction	0	Pedestrian
23	Broadside/Right angle Crash	0	Parked	0	Bicycle
5	Angle, Oncoming Left Turn	0	Other	2	Fixed Object
0	Backing	0	Unknown		

TRAFFIC - AADT

North Approach =	7600
South Approach =	8700
East Approach =	8300
West Approach =	5100
Million Entering Vehicles (MEV) =	56.91

Notes:
2007 AADT

US Hwy 169 and Kenyon Rd

2004 - 2014 Reportable Crashes

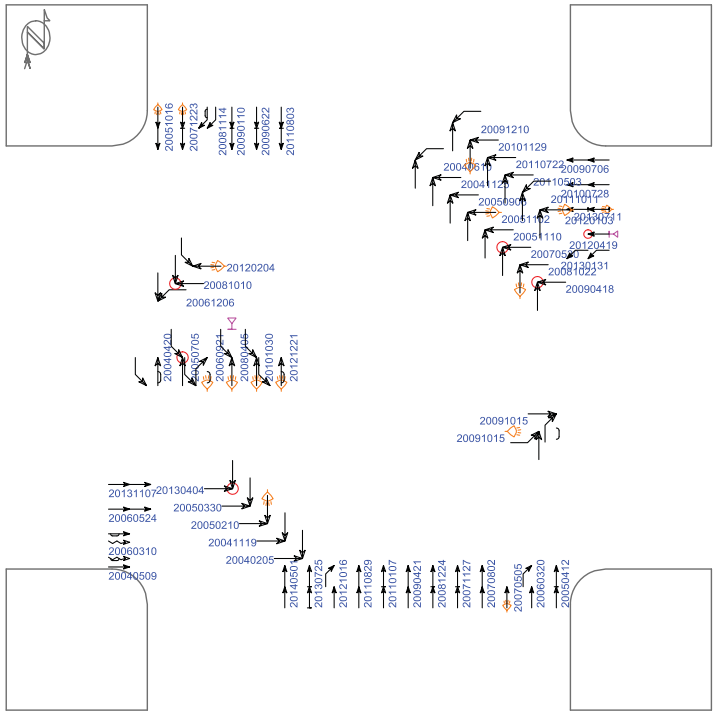

(0) crashes could not be placed in this schematic

Straight, Stopped, Unknown, Backing, Overtaking, Sideswipe, Parked, Erratic, Out of control, Right turn, Left turn, U-turn, Pedestrian, Bicycle, Injury, Fatality, Nighttime, DUI, Fixed objects: General, Signal, Tree, Pole, Curb, Animal, 3rd vehicle, Extra data

Pd' Programming, Inc. 07/10/2014

Iowa Department of Transportation

Major Cause Summary

US Hwy 169 and Kenyon Road

Report Version 1.1 Jan 2005

Analysis Years: 2004 [6], 2005 [8], 2006 [5], 2007 [5], 2008 [5], 2009 [8], 2010 [3], 2011 [6], 2012 [5], 2013 [6]

Crash Summary:

Fatal	-
Major Injury	2
Minor Injury	4
Possible/Unknown	17
PDO	34
Total Crashes	57

Injury Summary:

Fatal	-
Major Injury	2
Minor Injury	5
Possible	17
Unknown	2
Total Injuries	26

TOT Property Damage: $383,026

AVG Property Damage: $6,720

Surface Condition Summary:

Dry	38
Wet	11
Ice	2
Snow	5
Slush	1
Sand/Dirt/Oil/Gravel	-
Water	-
Other	-
Unknown	-
Not Reported	-
Total Crashes	57

Major Cause Summary:

	Animal		Improper Backing
18	Ran Traffic Signal		Illegally Parked/Unattended
	Ran Stop Sign	1	Swerving/Evasive Action
3	Crossed Centerline		Over-Correcting/Over-Steering
	FTYROW: At Uncontrolled Intersection		Downhill Runaway
1	FTYROW: Making Right Turn on Red Signal		Equipment Failure
	FTYROW: From Stop Sign		Separation of Units
	FTYROW: From Yield Sign	2	Ran Off Road - Right
4	FTYROW: Making Left Turn		Ran Off Road - Straight
	FTYROW: From Driveway	1	Ran Off Road - Left
	FTYROW: From Parked Position	3	Lost Control
	FTYROW: To Pedestrian		Inattentive/Distracted By: Passenger
3	FTYROW: Other (explain in narrative)	2	Inattentive/Distracted By: Use of Phone or Other
	Traveling Wrong Way or on Wrong Side of Rd		Inattentive/Distracted By: Fallen Object
3	Driving Too Fast for Conditions		Inattentive/Distracted By: Fatigued/Asleep
	Exceeded Authorized Speed		Other: Vision Obstructed
2	Made Improper Turn		Oversized Load/ Oversized Vehicle
	Improper Lane Change		Cargo/Equipment Loss or Shift
3	Followed Too Close	4	Other: Other Improper Action
	Disregarded Railroad Signal	3	Unknown
	Disregarded Warning Sign	3	Other: No Improper Action
1	Operating Vehicle in Reckless/Aggressive Manner		None Indicated

Selection Filter:

None

Analyst: OMV

Notes: Radius = 250'

Iowa Department of Transportation

Driver and Time Summary

US Hwy 169 and Kenyon Road

Report Version 1.0 Aug 2006

Crash Time of Day Summary:

From	00:00	02:00	04:00	06:00	08:00	10:00	12:00	14:00	16:00	18:00	20:00	22:00			
To	01:59	03:59	05:59	07:59	09:59	11:59	13:59	15:59	17:59	19:59	21:59	23:59	NR	Total	%
SUN	-	1	-	-	-	1	-	-	-	1	-	-	-	3	5
MON	-	-	-	1	-	4	-	-	-	1	-	-	-	6	11
TUE	-	-	-	2	2	3	1	-	1	1	-	-	-	10	18
WED	-	-	1	2	1	-	2	-	2	1	-	-	-	9	16
THU	-	-	1	5	3	-	1	-	2	1	2	1	-	16	28
FRI	-	-	1	2	2	-	-	1	-	1	-	-	-	7	12
SAT	-	-	-	-	1	-	-	1	-	-	1	3	-	6	11
Tot.		1	3	12	9	8	4	2	5	6	3	4		57	
%		2	5	21	16	14	7	4	9	11	5	7			100

Driver Age/Gender Summary:

Age	Male	Female	NR	Drivers	%
<14	-	-	-		
14	-	-	-		
15	-	-	-		
16	1	-	-	1	1
17	4	1	-	5	4
18	3	2	-	5	4
19	3	3	-	6	5
20	-	1	-	1	1
21 to 24	8	1	-	9	8
25 to 29	5	6	-	11	10
30 to 34	6	4	1	11	10
35 to 39	5	1	-	6	5
40 to 44	7	-	-	7	6
45 to 49	8	2	-	10	9
50 to 54	8	3	-	11	10
55 to 59	6	5	-	11	10
60 to 64	3	-	-	3	3
65 to 69	3	4	-	7	6
70 to 74	2	1	-	3	3
75 to 79	1	-	-	1	1
80 to 84	1	1	-	2	2
85 to 89	1	-	-	1	1
90 to 94	-	-	-		
95 plus	-	-	-		
NR	-	-	3	3	3
Drivers	75	35	4	114	
%	66	31	4		100

Drug/Alcohol Summary:

	Total	%
Drug	1	2
Alcohol, Less than Statutory		
Alcohol, Statutory		
Drug/Alcohol, Less than Statutory		
Drug/Alcohol, Statutory		
Refused	1	2
Under Influence of Alc/Drugs/Meds		
None Indicated	55	96
Total Crashes	57	100

Fixed Object Struck Summary:

	Vehs.	%
Bridge/Bridge rail/Overpass		
Underpass/Structure Support		
Culvert		
Ditch/Embankment	1	1
Curb/Island/Raised Median		
Guardrail		
Concrete Barrier		
Tree		
Pole - Utility/Light/Etc	1	1
Sign Post		
Mailbox		
Impact Attenuator		
Other Fixed Object		
None	112	98
Total Vehicles	114	100

Selection Filter:

None

Analyst: OMV

Notes: Radius = 250'

Intersection: US Hwy 169 & Kenyon Rd ID#: 101

Lane Width	**Turn Lanes**
Approaching N/S: 12 ft E/W: 12 ft	Left turn lanes on N/S/E/W approaches (southbound turn lane has a positive offset) Right turn lanes on N/S approaches Slip right turn lanes E/W (improved corner radii)
Sidewalk/ADA Ramps	**Lighting**
No sidewalks/ramps exists	Corridor street lighting exists on both streets. Only the NW signal pole has a combination traffic signal and lighting pole. Housing indicated 250 watt high pressure sodium fixtures.
Parking	**Access/Driveways**
No parking exists along both streets.	The nearest access to either street is at the signalized intersection, US Hwy 169 & Ave O W. It is approximately 850 ft north of this intersection.

Miscellaneous

1. Kenyon Rd intersects US Hwy 169 at approximately a 45° angle.
2. A grade separated railroad crossing exists approximately 450 ft south of the intersection. US Hwy 169 travels underneath the railroad, limiting the visibility of the traffic signal (identified in the Safety Audit).
3. Construct offset left turn lanes for E/W approaches as identified in the Traffic Signal Inventory

Cost Opinion

Intersection	Item	Period for Modification		
		Short-Term (0-2 Years)	Mid-Term (2-5 Years)	Long-Term (5-15 Years)
US Hwy 169 & Kenyon Rd	Construct NB offset left turn lane		$20,000	
	Construct E/W offset left turn lanes		$40,000	
Total			$60,000	

CLICK TO RETURN TO SIGNAL LOCATION MAP

Intersection: US Hwy 169 & Ave O W ID#: 102

Intersection: US Hwy 169 & Ave O W ID#: 102

Signal Evaluation	**MUTCD Issues**
1. PEEK 3000 Series signal and M3000E master controllers 2. Inductive Loop Detection - Reno Card Rack Amplifiers 3. Protected only left turn phasing on US Hwy 169 4. Has a fiber optic distribution panel with jumpers to the signal controller. Master controller connects with signal controller. 5. There is a telephone connection within signal cabinet. 6. Does have battery back-up system.	1. Has circular indications over left turn only lanes, but has Left Turn Signal signs. Should convert to arrow only heads. 2. There are two lane approaches along Ave O W, but no signing designating movements in each lane. 3. When replacing street name signs, signs on mast arms shall have 12”, upper and lowercase lettering 4. Update clearance intervals (yellow and red) to current standards of practice
Misc. Comments	
1. The fiber optic cable indicates communication with adjacent signals likely US Hwy 169 & Kenyon Rd.	

Budget Needs

Intersection	Item	Period for Modification		
		Short-Term (0-2 Years)	Mid-Term (2-5 Years)	Long-Term (5-15 Years)
US Hwy 169 & Ave O W	Replace Missing Visor	$100		
	Install signs to designate lane assignments	$1,000		
	Install/Replace Street Name Signs		$2,600	
	Replace/Upgrade Controller and Cabinet			$20,000
	Annual Maintenance	$800	$1,200	$4,000
Total		$1,900	$3,800	$24,000

SIGNAL EQUIPMENT DATA

INTERSECTION: US HWY 169 and Ave O W

DATE: 7/2/14

POWER:

ZONE: 1

ID: 102

CONTROLLER:
BRAND:
MODEL:

SOFTWARE VER:

DETECTORS:
LOOP:

VIDEO: None

PUSHBUTTONS: None

POLE DATA

POLE NO.	POLE TYPE	POLE MATL.	TYPE OF BASE	ARM LENGTH / PEDSTL. HEIGHT		REMARKS
1	1	2	1	40		
2	1	2	2	30		
3	1	2	2	40		
4	1	2	2	30		

POLE TYPE
1. SINGLE MAST ARM
2. TWIN MAST ARM
3. COMBINATION
4. PEDESTAL
5. UTILITY
6. OTHER

POLE MATL.
1. ALUMINUM
2. STEEL
3. WOOD
4. OTHER

TYPE OF BASE
1. PLATE
2. STEEL TRANSFORMER
3. ALUM. TRANSFORMER

AUXILIARY EQUIPMENT

VIDEO:

PRE-EMPTION:

CONFLICT MONITOR:

BATTERY BACK-UP:

DETECTOR AMP:

COMMUNICATION:

SIGNAL TIMING DATA

INTERSECTION: US HWY 169 and Ave O W

CONTROLLER:

DATE: 7/2/14 - Existing Timings

Basic Timing Data

	Ph1 -	Ph2 - EB	Ph3 -SBL	Ph4 - NB	Ph5 -	Ph6 - WB	Ph7 -NBL	Ph8 - SB
Min Grn		10	5	10		10	5	10
Passage		5.0	5.5	5.0		5.0	5.0	5.0
Max 1		30	30	30		30	30	30
Max 2								
Yellow		4.0	3.0	4.5		4.0	3.0	4.5
Red Clr		1.0	0.5	1.0		1.0	0.5	1.0
Walk								
Ped Clear								
Recall				Min				Min
Lock/Non		Non	Non	Lock		Non	Non	Lock
Act/Non-Act								

Coordination Plan Data

Values %(0-100)

Dial 1/Split 1 Cycle: 72 Offset: 31

Phase	1	2	3	4	5	6	7	8
Time		40	20	40			20	40
Mode								

Active Periods: All Day, Every Day

Dial 2/Split 1 Cycle: Offset:

Phase	1	2	3	4	5	6	7	8
Time								
Mode								

Active Periods:

Dial 3/Split 1 Cycle: Offset:

Phase	1	2	3	4	5	6	7	8
Time								
Mode								

Active Periods:

Phasing

N

INDICATE NORTH

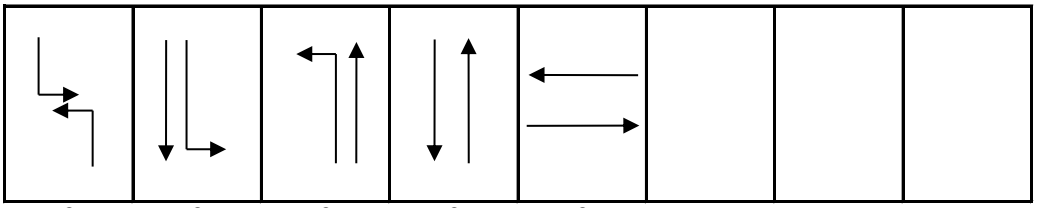

3 & 8 4 & 7 3 & 8 4 & 8 2 & 6

SIGNAL LAYOUT: US HIGHWAY 169 & AVENUE O WEST

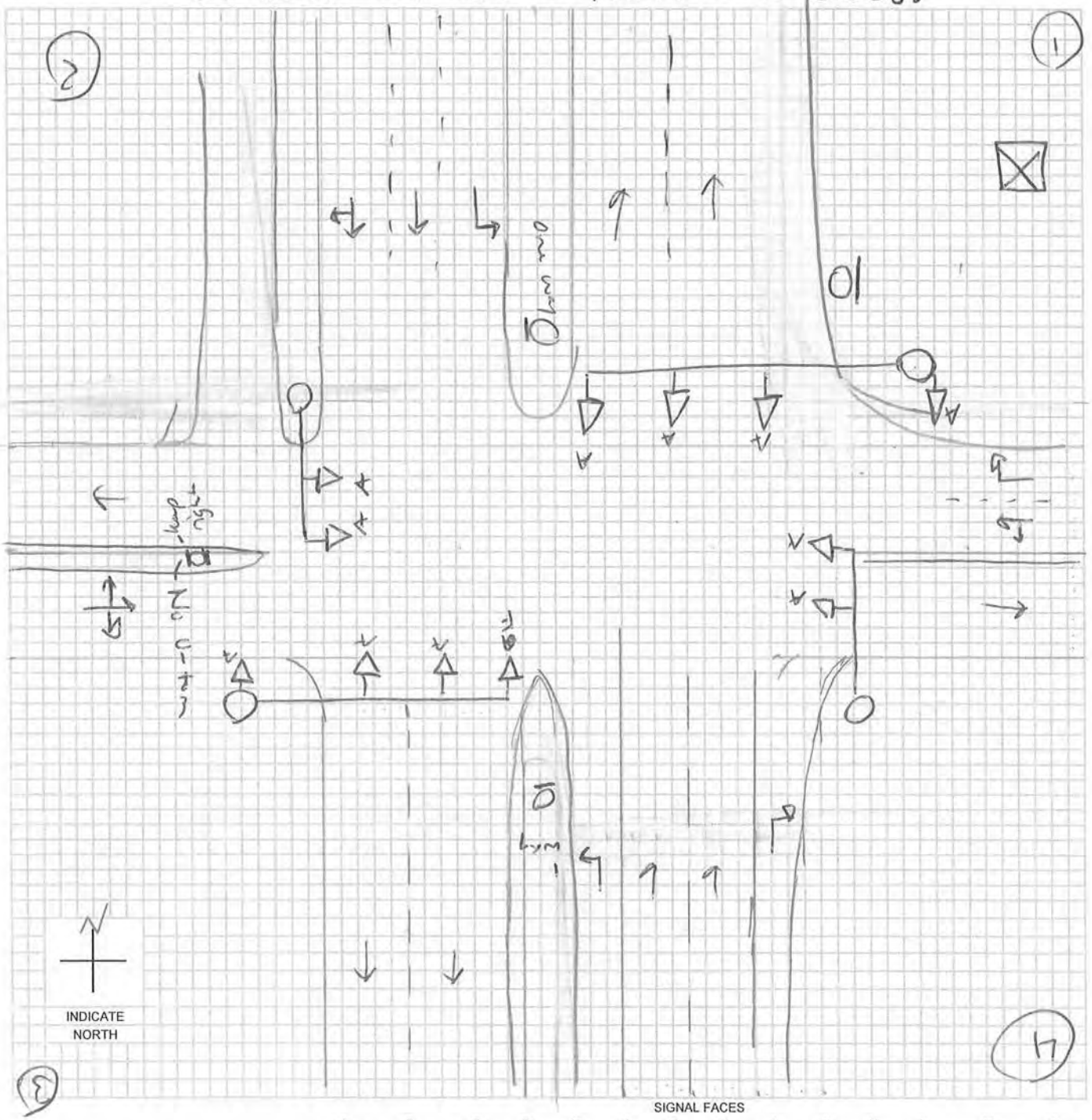

SIGNAL FACES

A	B	C	D	E	F	G	H	I	J	K	L	M	O
12 R	12 R	12 R	12 R	12 R	12 R	12 ◄R	12 ◄R	12 R	12 R	DW	W/DW	W DW	
12 Y	12 ◄Y / 12 Y	12 Y	12 Y	12 Y	12 ◄Y	12 ◄Y	12 ◄Y	12 Y	12 Y	W	CD		
12 G	12 ◄G / 12 G	12 G	12 G	12 ◄G	12 ◄G	12 ◄G	12 ◄FY	12 G	12 G			N: W CD DW	
		12 ◄G	12 ◄Y				12 ◄G	12 G►	12 Y►				
			12 ◄G						12 G►				

LEGEND

- (7) POLE & NUMBER
- SIGNAL INDICATION
- PEDESTRIAN SIGNAL INDICATION
- PB PUSHBUTTON
- [00-00-PD] LOOP DECTETOR
  - DISTANCE FROM STOP LINE - AREA OF DETECTION - PRESENCE PR; PULSE P; DELAY D; NO DELAY ND; EXTENSION E
- ⊠ CONTROLLER
- (M) METER
- VIDEO DET CAMERA

-* OPTICALLY PROGRAMMABLE

Intersection: US Hwy 169 & Ave O W ID #: 102

Crash Summary	**Trends**
1. Crash rate is below statewide average (0.44 crashes/MEV) 2. Seven of 25 crashes were injury crashes. There was 1 major injury crash. 3. Ran traffic signal (25%) was reported most frequently as the major cause (10 crashes indicated the surface condition was wet, ice, snow, or slush) 4. One vehicle was reported striking a fixed object: a pole (1) 5. 56% of the crashes occurred between 12 PM and 8 PM. 6. 38% of the drivers involved in the crashes were under the age of 30.	1. The intersection experienced between 1 and 5 crashes each year throughout the 10 years of analysis. 2. 40% of crashes were right-angle/broadside with 28 % being rear-end crashes. There was no particular direction that had a high percentage of crashes.
Mitigation Options / Potential Improvements	
1. No significant safety concern at intersection. Continue to monitor if safety concern arises.	
Funding Potential	
1. Not needed at this time	

Cost Opinion

Intersection	Item	Period for Modification		
		Short-Term (0-2 Year)	Mid-Term (2-5 Years)	Long-Term (5-15 Years)
US Hwy 169 & Ave O W	None			
Total				

Intersection Crash Summary

Location: US Hwy 169 and Ave O W
City/County: Fort Dodge, Webster County
Time Period: 2004-May 2014 Crash Period = 10.5 years
Prepared by: OMV

NUMBER OF CRASHES

0	Fatal Crashes	0 fatalities	0 injuries
1	Major Injury Crashes		1 injuries
0	Minor Injury Crashes		0 injuries
6	Possible/Unknown Injury Crashes		8 injuries
18	Property Damage Only Crashes		
Totals: 25	Crashes	0 fatalities	9 injuries

CRASH RATES

Total Crash Rate =	25	/	56.95 MEV	=	0.44 Total Crashes/MEV
Fatal Crash Rate =	0	/	56.95 MEV	=	0.00 Fatal Crashes/MEV
Fatal/Injury Crash Rate =	7	/	56.95 MEV	=	0.12 F & I Crashes/MEV

CRASH FREQUENCY

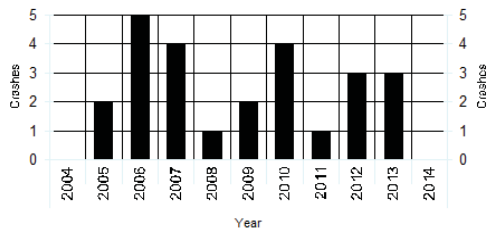

CRASH TYPE

0 Head-on	2 Sideswipe, Same Direction	Non Vehicle Collision Type	
7 Rear-end Crash	0 Sideswipe, Opposite Direction	0 Pedestrian	
10 Broadside/Right angle Crash	0 Parked	1 Bicycle	
3 Angle, Oncoming Left Turn	0 Other	1 Fixed Object	
0 Backing	0 Unknown	2 No Object Indicated	

TRAFFIC - AADT

North Approach =	10900
South Approach =	7600
East Approach =	6500
West Approach =	4720
Million Entering Vehicles (MEV) =	56.95

Notes:
IDOT 2007 AADT

US Hwy 169 and Ave O W

2004 - 2014 Reportable Crashes

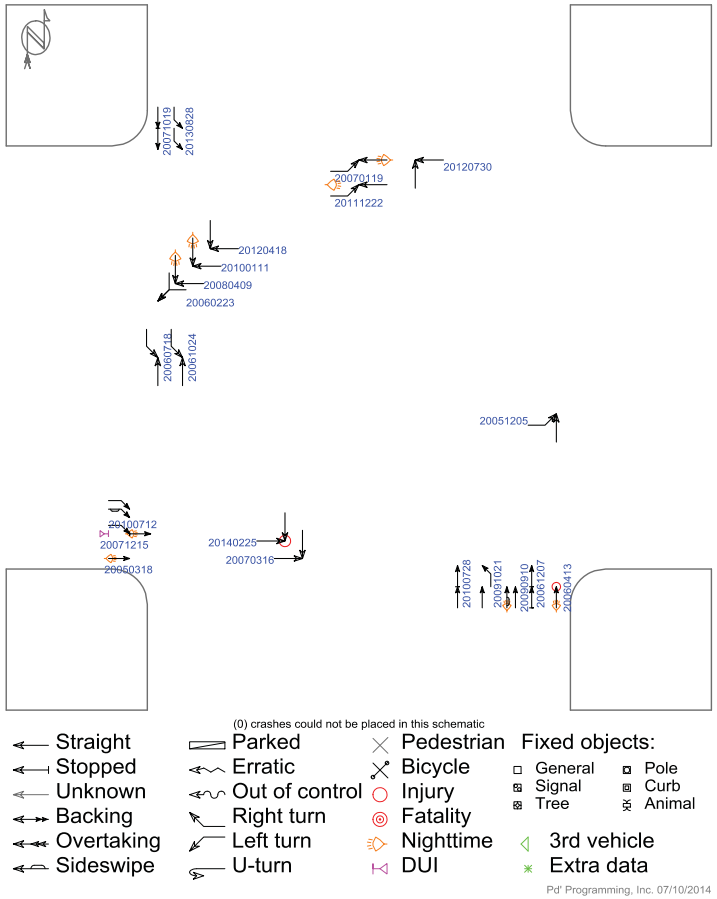

Iowa Department of Transportation

Major Cause Summary

US Hwy 169 and Ave O W

Report Version 1.1 Jan 2005

Analysis Years: 2005 [2], 2006 [5], 2007 [4], 2008 [1], 2009 [2], 2010 [4], 2011 [1], 2012 [3], 2013 [3]

Crash Summary:

Fatal	-
Major Injury	1
Minor Injury	-
Possible/Unknown	6
PDO	18
Total Crashes	25

Injury Summary:

Fatal	-
Major Injury	1
Minor Injury	-
Possible	6
Unknown	2
Total Injuries	9

TOT Property Damage: $106,700

AVG Property Damage: $4,268

Surface Condition Summary:

Dry	15
Wet	5
Ice	2
Snow	3
Slush	-
Sand/Dirt/Oil/Gravel	-
Water	-
Other	-
Unknown	-
Not Reported	-
Total Crashes	25

Major Cause Summary:

	Animal		Improper Backing
6	Ran Traffic Signal		Illegally Parked/Unattended
	Ran Stop Sign		Swerving/Evasive Action
2	Crossed Centerline		Over-Correcting/Over-Steering
	FTYROW: At Uncontrolled Intersection		Downhill Runaway
	FTYROW: Making Right Turn on Red Signal		Equipment Failure
2	FTYROW: From Stop Sign		Separation of Units
	FTYROW: From Yield Sign		Ran Off Road - Right
2	FTYROW: Making Left Turn		Ran Off Road - Straight
1	FTYROW: From Driveway		Ran Off Road - Left
	FTYROW: From Parked Position		Lost Control
1	FTYROW: To Pedestrian		Inattentive/Distracted By: Passenger
1	FTYROW: Other (explain in narrative)		Inattentive/Distracted By: Use of Phone or Other
	Traveling Wrong Way or on Wrong Side of Rd		Inattentive/Distracted By: Fallen Object
	Driving Too Fast for Conditions		Inattentive/Distracted By: Fatigued/Asleep
	Exceeded Authorized Speed		Other: Vision Obstructed
	Made Improper Turn		Oversized Load/ Oversized Vehicle
	Improper Lane Change		Cargo/Equipment Loss or Shift
2	Followed Too Close	3	Other: Other Improper Action
	Disregarded Railroad Signal	3	Unknown
	Disregarded Warning Sign	2	Other: No Improper Action
	Operating Vehicle in Reckless/Aggressive Manner		None Indicated

Selection Filter:

None

Analyst: OMV

Notes: Radius = 250'

Iowa Department of Transportation

Driver and Time Summary

US Hwy 169 and Ave O W

Report Version 1.0 Aug 2006

Crash Time of Day Summary:

From	00:00	02:00	04:00	06:00	08:00	10:00	12:00	14:00	16:00	18:00	20:00	22:00			
To	01:59	03:59	05:59	07:59	09:59	11:59	13:59	15:59	17:59	19:59	21:59	23:59	NR	Total	%
SUN	-	-	-	-	-	-	-	-	-	-	-	-	-		
MON	-	-	-	1	1	-	2	-	1	-	-	-	-	5	20
TUE	-	-	-	1	2	-	-	-	-	-	-	-	-	3	12
WED	-	-	-	1	-	-	1	1	1	-	1	-	-	5	20
THU	-	-	1	-	1	-	-	-	1	2	-	1	-	6	24
FRI	-	-	-	-	-	-	2	-	1	2	-	-	-	5	20
SAT	-	-	-	-	-	-	-	-	-	-	1	-	-	1	4
Tot.			1	3	4		5	1	4	4	2	1		25	
%			4	12	16		20	4	16	16	8	4			100

Driver Age/Gender Summary:

Age	Male	Female	NR	Drivers	%
<14	-	-	-		
14	-	-	-		
15	-	1	-	1	2
16	-	-	-		
17	1	-	-	1	2
18	2	-	-	2	4
19	-	1	-	1	2
20	2	1	-	3	6
21 to 24	5	1	-	6	12
25 to 29	4	2	-	6	12
30 to 34	1	1	-	2	4
35 to 39	3	-	-	3	6
40 to 44	1	3	-	4	8
45 to 49	2	1	-	3	6
50 to 54	1	-	-	1	2
55 to 59	5	1	-	6	12
60 to 64	2	-	-	2	4
65 to 69	-	2	-	2	4
70 to 74	1	-	-	1	2
75 to 79	-	2	-	2	4
80 to 84	-	-	-		
85 to 89	-	-	-		
90 to 94	1	-	-	1	2
95 plus	-	-	-		
NR	-	-	2	2	4
Drivers	31	16	2	49	
%	63	33	4		100

Drug/Alcohol Summary:

	Total	%
Drug		
Alcohol, Less than Statutory		
Alcohol, Statutory		
Drug/Alcohol, Less than Statutory		
Drug/Alcohol, Statutory		
Refused		
Under Influence of Alc/Drugs/Meds	1	4
None Indicated	24	96
Total Crashes	25	100

Fixed Object Struck Summary:

	Vehs.	%
Bridge/Bridge rail/Overpass		
Underpass/Structure Support		
Culvert		
Ditch/Embankment		
Curb/Island/Raised Median		
Guardrail		
Concrete Barrier		
Tree		
Pole - Utility/Light/Etc	1	2
Sign Post		
Mailbox		
Impact Attenuator		
Other Fixed Object		
None	48	98
Total Vehicles	49	100

Selection Filter:

None

Analyst: OMV

Notes: Radius = 250'

Intersection: US Hwy 169 & Ave O W ID #: 102

Lane Width	**Turn Lanes**
Approaching N/S: 12 ft E/W: 12 ft	Left turn lanes on N/S approaches Right turn lanes N/S approaches There are 2 approaching lanes E/W however no lane designation exists
Sidewalk/ADA Ramps	**Lighting**
No sidewalks/ramps exists	Corridor street lighting exists only on the south approach.
Parking	**Access/Driveways**
No parking exists along both streets.	No driveways exist along US Hwy 169. There is a frontage road located along the west side of US Hwy 169, 50 ft west of the southbound lanes. There has been a median constructed on the west approach to limit access to this frontage road. Additional driveways/frontage roads are located on the east approach 75 ft away with no median restriction.
Miscellaneous	
1. An option would be to reconstruct the N/S left turn lanes to provide a positive offset. This could allow for protected/permissive left turn phasing and reduce vehicular delays. 2. Consider realigning the E/W approaches to include left turn lanes.	

Cost Opinion

Intersection	Item	Period for Modification		
		Short-Term	Mid-Term	Long-Term
		(0-2 Years)	(2-5 Years)	(5-15 Years)
US Hwy 169 & Ave O W	Realign E/W Approaches to include Left Turn Lanes		$25,000	
	Construct N/S Offset Left Turn Lanes		$50,000	
Total			$75,000	

CLICK TO RETURN TO SIGNAL LOCATION MAP

Intersection: US Hwy 169 & Triton Circle ID#: 103

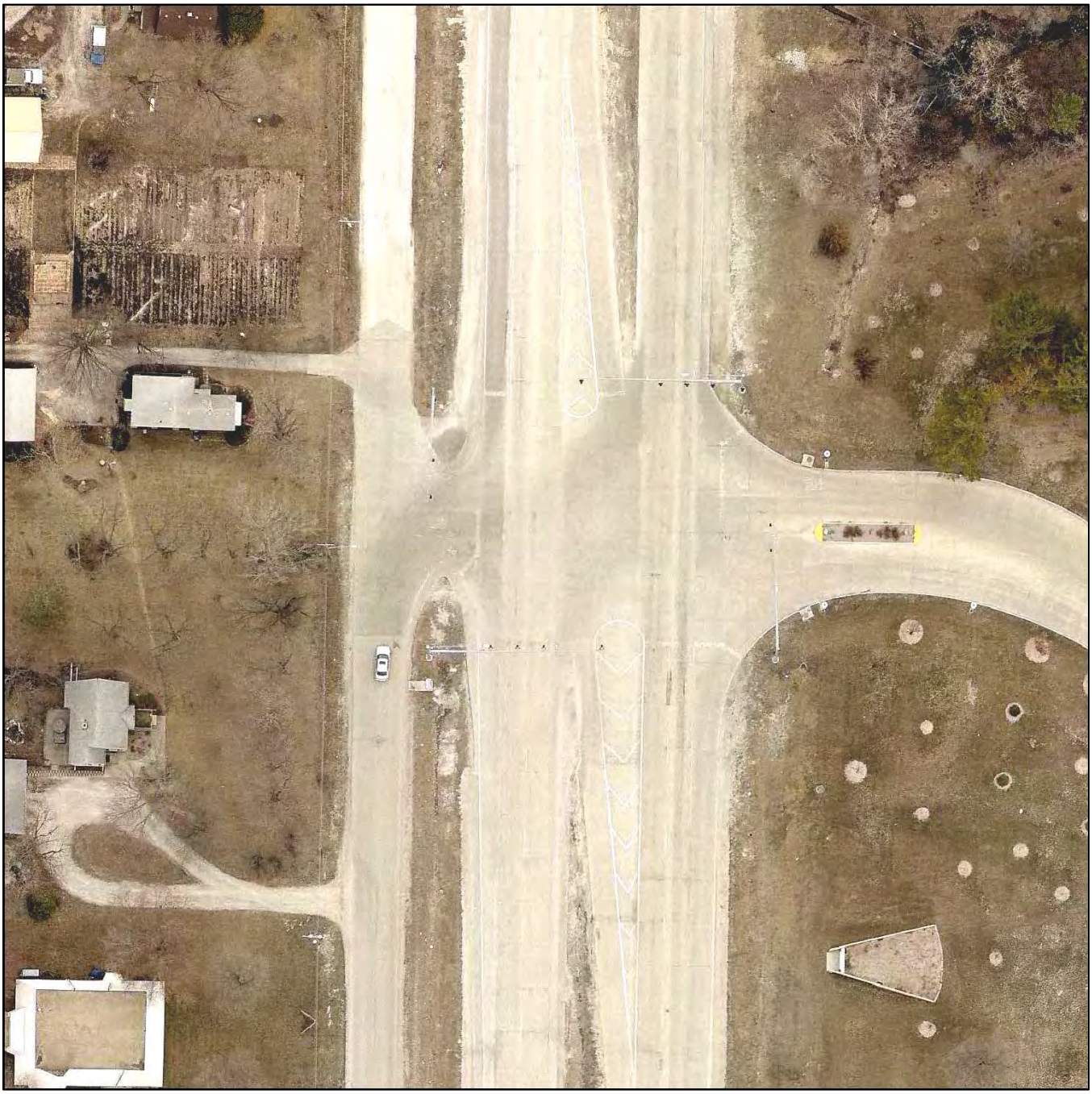

Intersection: US Hwy 169 & Triton Circle ID#: 103

Signal Evaluation	MUTCD Issues
1. Econolite ASC/3-1000 signal controller 2. Autoscope Terra video detection 3. Protected/permissive left turn phasing on US Hwy 169 4. No communication present 5. Does not have battery back-up system.	1. Has circular indications over left turn only lanes, but has Left Turn Yield on Green signs. Acceptable per previous MUTCD. Should be changed to flashing yellow arrow (arrow only heads) to comply with 2009 Edition. 2. Update clearance intervals (yellow and red) to current standards of practice

Misc. Comments

1. The close proximity of A St (50 ft) indicates a need for stop control on A St (as signed). Drivers entering US Hwy 169 may think they don't need to stop for the traffic signal. Installation of a secondary signal head on the NE pole would increase visibility of the traffic signal for the northbound drivers on A St.

Budget Needs

Intersection	Item	Period for Modification		
		Short-Term (0-2 Years)	Mid-Term (2-5 Years)	Long-Term (5-15 Years)
US Hwy 169 & Triton Circle	Install add. signal head for EB on NE pole	$800		
	Install/Replace Street Name Signs		$2,600	
	Install Battery Back-Up System		$8,000	
	Annual Maintenance	$800	$1,200	$4,000
Total		$1,600	$11,800	$4,000

SIGNAL EQUIPMENT DATA

INTERSECTION: US HWY 169 & Triton Circle

DATE: 7/2/14

POWER: Underground

ZONE: 1

ID: 103

CONTROLLER:
BRAND: Econolite Control Products
MODEL: ASC/3-1000

SOFTWARE VER: Boot: V1.09.00
Application: V2.42.20

DETECTORS:
LOOP:

VIDEO: Autoscope Terra Interface Panel

PUSHBUTTONS: None

POLE DATA

POLE NO.	POLE TYPE	POLE MATL.	TYPE OF BASE	ARM LENGTH / PEDSTL. HEIGHT		REMARKS
1	3	2	1	75		Has mesh around base
2	3	2	2	50		
3	3	2	1	75		
4	3	2	2	50		

POLE TYPE
1. SINGLE MAST ARM
2. TWIN MAST ARM
3. COMBINATION
4. PEDESTAL
5. UTILITY
6. OTHER

POLE MATL.
1. ALUMINUM
2. STEEL
3. WOOD
4. OTHER

TYPE OF BASE
1. PLATE
2. STEEL TRANSFORMER
3. ALUM. TRANSFORMER

AUXILIARY EQUIPMENT

VIDEO: Autoscope Terra Access Point and Autoscope Terra Interface Panel

PRE-EMPTION:

CONFLICT MONITOR: Reno MMU-1600

BATTERY BACK-UP: Non

DETECTOR AMP:

COMMUNICATION:

Also: American Dynamics TV

SIGNAL TIMING DATA

INTERSECTION: US HWY 169 & Triton Circle
CONTROLLER: Econolite Control Products
DATE: 7/2/14 - Existing Timings

Basic Timing Data

	Ph1 - SBL	Ph2 - NB	Ph3 -	Ph4 - EB	Ph5 -NBL	Ph6 - SB	Ph7 -	Ph8 - WB
Min Grn	4	11	0	4	4	11	0	4
Passage								
Max 1	15	30	0	25	15	30	0	25
Max 2	0	0	0	0	0	0	0	0
Yellow	3.0	5.0	0.0	3.0	3.0	5.0	0.0	3.0
Red Clr	2.5	1.5	0.0	3.0	2.5	1.5	0.0	3.0
Walk	0	0	0	0	0	0	0	0
Ped Clear	0	0	0	0	0	0	0	0
Recall		Veh				Veh		
Lock/Non								
Act/Non-Act								

Coordination Plan Data

No Coordination Plan

Dial 1/Split 1 Cycle: Offset:

Phase	1	2	3	4	5	6	7	8
Time								
Mode								

Active Periods:

Dial 2/Split 1 Cycle: Offset:

Phase	1	2	3	4	5	6	7	8
Time								
Mode								

Active Periods:

Dial 3/Split 1 Cycle: Offset:

Phase	1	2	3	4	5	6	7	8
Time								
Mode								

Active Periods:

Phasing

N

INDICATE NORTH

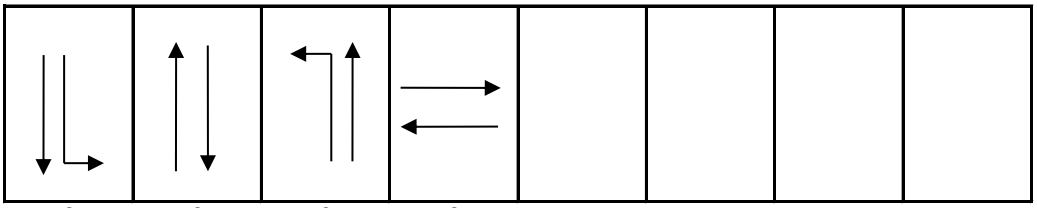

1 & 6 2 & 6 2 & 5 4 & 8

SIGNAL LAYOUT: US HIGHWAY 169 & TRITON CIRCLE

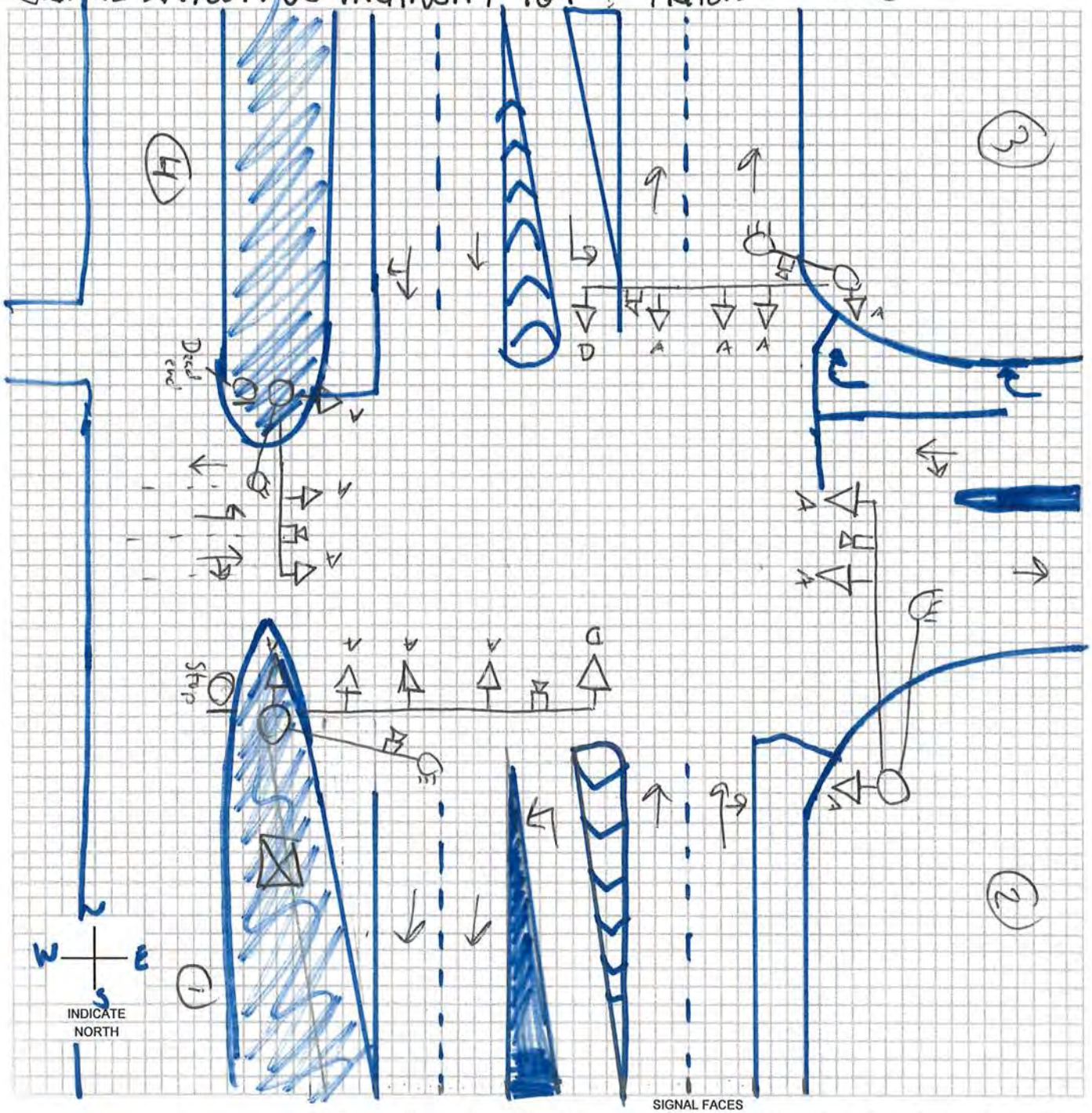

SIGNAL FACES

A	B	C	D	E	F	G	H	I	J	K	L	M	N	O
12 R	12 R	12 R	12 R	12 R	12 R	12 ◄R	12 ◄R	12 R	12 R	DW	W/DW	W DW		
12 Y	12 ◄Y	12 Y	12 Y	12 Y	12 ◄Y	12 ◄Y	12 ◄Y	12 Y	12 Y	W	CD			
12 G	12 ◄G	12 G	12 G	12 ◄G	12 ◄G	12 ◄G	12 ◄FY	12 G	12 G				W CD DW	
		12 ◄G	12 ◄Y				12 ◄G	12 G►	12 Y►					
			12 ◄G						12 G►					

LEGEND

- (7) POLE & NUMBER
- SIGNAL INDICATION
- PEDESTRIAN SIGNAL INDICATION
- PB PUSHBUTTON
- 00-00-PD LOOP DECTETOR
- DISTANCE FROM STOP LINE - AREA OF DETECTION - PRESENCE PR; PULSE P; DELAY D; NO DELAY ND; EXTENSION E
- CONTROLLER
- (M) METER
- VIDEO DET CAMERA

-* OPTICALLY PROGRAMMABLE

Intersection: US Hwy 169 & Triton Circle ID #: 103

Crash Summary	**Trends**
1. Crash rate is below statewide average (0.14 crashes/MEV) 2. Three of 7 crashes were injury crashes. There was 1 major injury crash. 3. Failure to yield right-of-way (57%) was reported most frequently as the major cause (1 crash indicated the surface condition was wet, ice, snow, or slush) 4. Three vehicles were reported as striking a fixed object: a ditch (2) and a tree (1) 5. 54% of the drivers involved in the crashes were under the age of 30.	1. The intersection experienced most of the crashes within the last 5 years as the east approach to the intersection wasn't constructed until 2008.
Mitigation Options / Potential Improvements	
1. No significant safety concern at intersection. Continue to monitor if safety concern arises.	
Funding Potential	
1. Not needed at this time	

Cost Opinion

Intersection	Item	Period for Modification		
		Short-Term (0-2 Year)	Mid-Term (2-5 Years)	Long-Term (5-15 Years)
US Hwy 169 & Triton Circle	None			
Total				

Intersection Crash Summary

Location: US Hwy 169 and Triton Circle
City/County: Fort Dodge, Webster County
Time Period: 2004-May 2014 Crash Period = 10.5 years
Prepared by: OMV

NUMBER OF CRASHES

0	Fatal Crashes	0 fatalities	0 injuries
1	Major Injury Crashes		1 injuries
1	Minor Injury Crashes		1 injuries
1	Possible/Unknown Injury Crashes		2 injuries
4	Property Damage Only Crashes		
Totals: 7	Crashes	0 fatalities	4 injuries

CRASH RATES

Total Crash Rate =	7	/	51.36 MEV	=	0.14 Total Crashes/MEV
Fatal Crash Rate =	0	/	51.36 MEV	=	0.00 Fatal Crashes/MEV
Fatal/Injury Crash Rate =	3	/	51.36 MEV	=	0.06 F & I Crashes/MEV

CRASH FREQUENCY

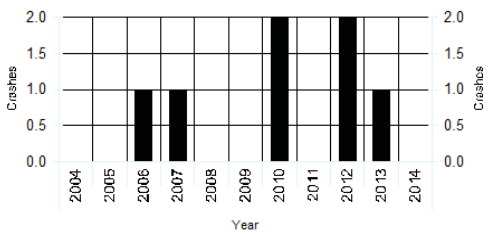

CRASH TYPE

0 Head-on	1 Sideswipe, Same Direction	Non Vehicle Collision Type	
0 Rear-end Crash	0 Sideswipe, Opposite Direction	0 Pedestrian	
2 Broadside/Right angle Crash	0 Parked	0 Bicycle	
1 Angle, Oncoming Left Turn	0 Other	3 Fixed Object	
0 Backing	0 Unknown		

TRAFFIC - AADT

North Approach =	10900
South Approach =	10900
East Approach =	4000
West Approach =	1000
Million Entering Vehicles (MEV) =	51.36

Notes:
xxxxxxx

US Hwy 169 and Triton Circle

2004 - 2014 Reportable Crashes

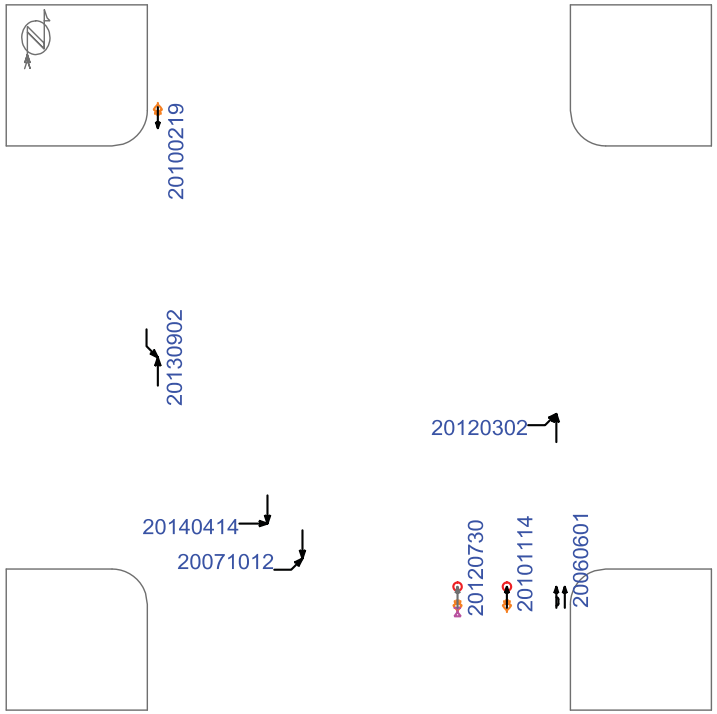

(0) crashes could not be placed in this schematic

Straight
Stopped
Unknown
Backing
Overtaking
Sideswipe
Parked
Erratic
Out of control
Right turn
Left turn
U-turn
Pedestrian
Bicycle
Injury
Fatality
Nighttime
DUI
Fixed objects:
General
Signal
Tree
Pole
Curb
Animal
3rd vehicle
Extra data

Pd' Programming, Inc. 07/10/2014

Iowa Department of Transportation

Major Cause Summary

US Hwy 169 and Triton Circle

Report Version 1.1 Jan 2005

Analysis Years: 2006 [1], 2007 [1], 2010 [2], 2012 [2], 2013 [1]

Crash Summary:

Fatal	-
Major Injury	1
Minor Injury	1
Possible/Unknown	1
PDO	4
Total Crashes	7

Injury Summary:

Fatal	-
Major Injury	1
Minor Injury	1
Possible	2
Unknown	-
Total Injuries	4

TOT Property Damage: $45,800

AVG Property Damage: $6,543

Surface Condition Summary:

Dry	6
Wet	-
Ice	-
Snow	1
Slush	-
Sand/Dirt/Oil/Gravel	-
Water	-
Other	-
Unknown	-
Not Reported	-
Total Crashes	7

Major Cause Summary:

	Animal		Improper Backing
	Ran Traffic Signal		Illegally Parked/Unattended
	Ran Stop Sign		Swerving/Evasive Action
1	Crossed Centerline		Over-Correcting/Over-Steering
	FTYROW: At Uncontrolled Intersection		Downhill Runaway
	FTYROW: Making Right Turn on Red Signal		Equipment Failure
1	FTYROW: From Stop Sign		Separation of Units
	FTYROW: From Yield Sign	1	Ran Off Road - Right
2	FTYROW: Making Left Turn		Ran Off Road - Straight
	FTYROW: From Driveway		Ran Off Road - Left
	FTYROW: From Parked Position		Lost Control
	FTYROW: To Pedestrian		Inattentive/Distracted By: Passenger
1	FTYROW: Other (explain in narrative)		Inattentive/Distracted By: Use of Phone or Other
	Traveling Wrong Way or on Wrong Side of Rd		Inattentive/Distracted By: Fallen Object
	Driving Too Fast for Conditions		Inattentive/Distracted By: Fatigued/Asleep
	Exceeded Authorized Speed		Other: Vision Obstructed
	Made Improper Turn		Oversized Load/ Oversized Vehicle
	Improper Lane Change		Cargo/Equipment Loss or Shift
	Followed Too Close		Other: Other Improper Action
	Disregarded Railroad Signal		Unknown
	Disregarded Warning Sign		Other: No Improper Action
1	Operating Vehicle in Reckless/Aggressive Manner		None Indicated

Selection Filter:

None

Analyst: OMV

Notes: Radius = 250' - Excluded crash 2004246899 because it was

Iowa Department of Transportation

Driver and Time Summary

US Hwy 169 and Triton Circle

Report Version 1.0 Aug 2006

Crash Time of Day Summary:

From / To	00:00 01:59	02:00 03:59	04:00 05:59	06:00 07:59	08:00 09:59	10:00 11:59	12:00 13:59	14:00 15:59	16:00 17:59	18:00 19:59	20:00 21:59	22:00 23:59	NR	Total	%
SUN	-	-	1	-	-	-	-	-	-	-	-	-	-	1	14
MON	-	1	-	-	-	-	-	-	-	1	-	-	-	2	29
TUE	-	-	-	-	-	-	-	-	-	-	-	-	-		
WED	-	-	-	-	-	-	-	-	-	-	-	-	-		
THU	-	-	-	-	-	-	1	-	-	-	-	-	-	1	14
FRI	-	-	-	1	-	1	-	-	-	1	-	-	-	3	43
SAT	-	-	-	-	-	-	-	-	-	-	-	-	-		
Tot.		1	1	1		1	1			2				7	
%		14	14	14		14	14			29					100

Driver Age/Gender Summary:

Age	Male	Female	NR	Drivers	%
<14	-	-	-		
14	-	-	-		
15	-	-	-		
16	-	-	-		
17	-	-	-		
18	-	1	-	1	9
19	-	1	-	1	9
20	1	-	-	1	9
21 to 24	-	-	-		
25 to 29	3	-	-	3	27
30 to 34	-	-	-		
35 to 39	-	-	-		
40 to 44	-	-	-		
45 to 49	-	1	-	1	9
50 to 54	-	-	-		
55 to 59	-	-	-		
60 to 64	-	1	-	1	9
65 to 69	1	-	-	1	9
70 to 74	-	-	-		
75 to 79	-	-	-		
80 to 84	1	1	-	2	18
85 to 89	-	-	-		
90 to 94	-	-	-		
95 plus	-	-	-		
NR	-	-	-		
Drivers	6	5	0	11	
%	55	45	0		100

Drug/Alcohol Summary:

	Total	%
Drug		
Alcohol, Less than Statutory	1	14
Alcohol, Statutory		
Drug/Alcohol, Less than Statutory		
Drug/Alcohol, Statutory		
Refused		
Under Influence of Alc/Drugs/Meds		
None Indicated	6	86
Total Crashes	7	100

Fixed Object Struck Summary:

	Vehs.	%
Bridge/Bridge rail/Overpass		
Underpass/Structure Support		
Culvert		
Ditch/Embankment	2	18
Curb/Island/Raised Median		
Guardrail		
Concrete Barrier		
Tree	1	9
Pole - Utility/Light/Etc		
Sign Post		
Mailbox		
Impact Attenuator		
Other Fixed Object		
None	8	73
Total Vehicles	11	100

Selection Filter:

None

Analyst: OMV

Notes: Radius = 250' - Excluded crash 2004246899 because it was

Intersection: US Hwy 169 & Triton Circle ID#: 103

Lane Width	**Turn Lanes**
Approaching N/S: 12 ft E/W: 12 ft	Left turn lanes on N/S approaches Right turn lanes N/S/E approaches
Sidewalk/ADA Ramps	**Lighting**
No sidewalks/ramps exists	All four signal poles are combination signal and lighting poles. The east approach has decorative pedestal light poles.
Parking	**Access/Driveways**
No parking exists along both streets.	No driveways exist along US Hwy 169. A St is located along the west side of US Hwy 169, 50 ft west of the southbound lanes.
Miscellaneous	
1. Ideally, A St would be relocated further west (50' or more) to create a more defined intersection at US Hwy 169 & Triton Circle. However, proximity of homes west of A St greatly increases the cost of any realignment.	

Cost Opinion

Intersection	Item	Period for Modification		
		Short-Term (0-2 Years)	Mid-Term (2-5 Years)	Long-Term (5-15 Years)
US Hwy 169 & Triton Circle	None			
Total				

CLICK TO RETURN TO SIGNAL LOCATION MAP

Kenyon Rd & Tower Dr ID#: 104

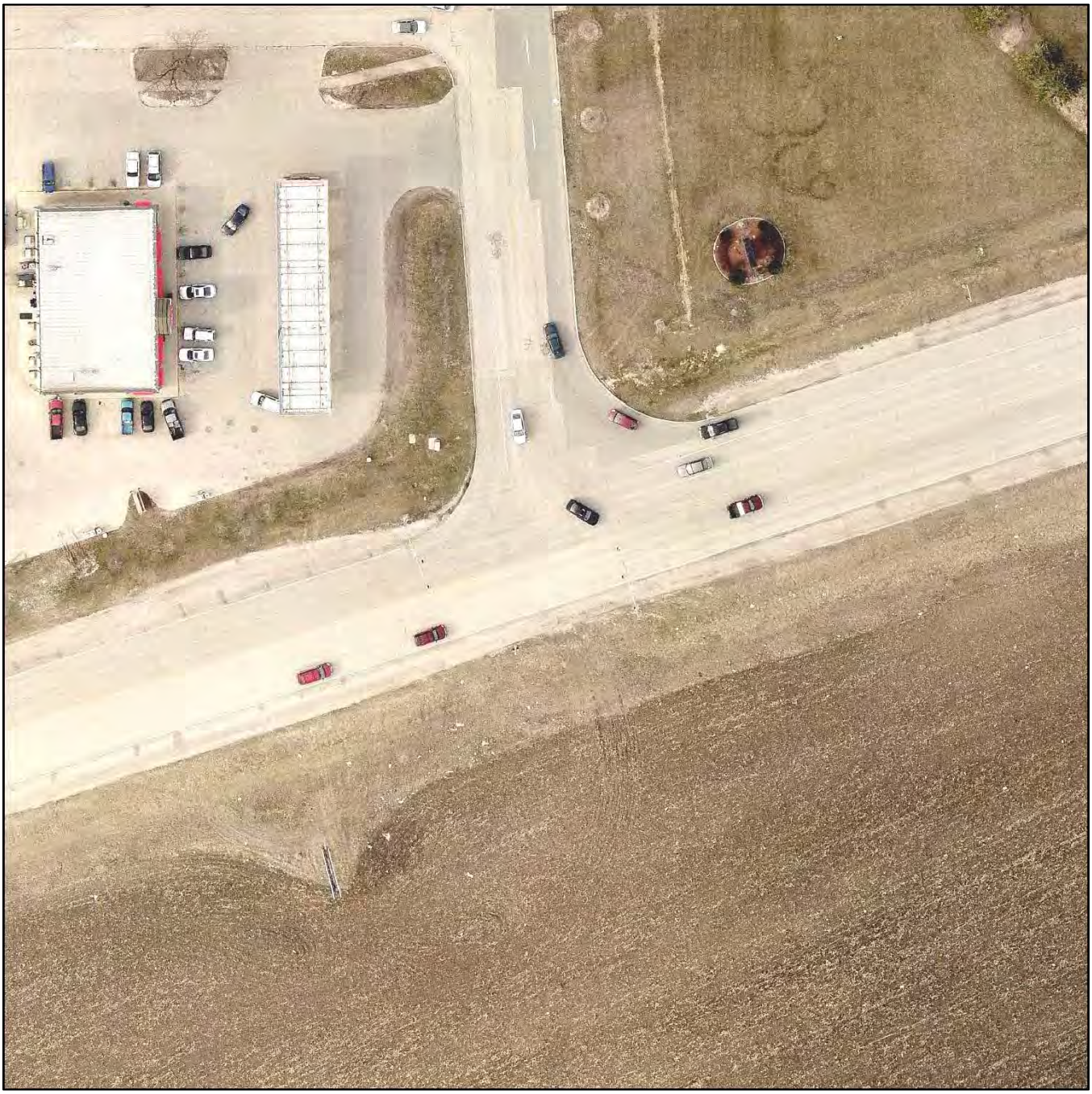

Intersection: Kenyon Rd & Tower Dr ID#: 104

Signal Evaluation	**MUTCD Issues**
1. PEEK 3000 Series signal controller 2. Iteris Vantage Plus video detection 3. Permissive only left turn phasing on Kenyon Rd 4. Has a fiber optic distribution panel with jumpers to the signal controller. Likely connects to the US Hwy 169 & Kenyon Rd intersection. 5. Does not have battery back-up system.	1. The pedestal pole for the southbound traffic on Tower Dr has 2 vehicular heads. Since there is a third head located on the eastbound mast arm support, only one of these heads is required and therefore the second head can be within 8 ft of the other. Would be best to remove one to confirm compliance. 2. When replacing street name signs, signs on mast arms shall have 12”, upper and lowercase lettering 3. Update clearance intervals (yellow and red) to current standards of practice
Misc. Comments	
1.	

Budget Needs

Intersection	Item	Period for Modification		
		Short-Term (0-2 Years)	Mid-Term (2-5 Years)	Long-Term (5-15 Years)
Kenyon Rd & Tower Dr	Replace Missing Visor	$100		
	Remove 2nd Signal Head on Pedestal Pole		$200	
	Install/Replace Street Name Signs		$1,950	
	Install Battery Back-Up System		$8,000	
	Replace/Upgrade Controller and Cabinet			$20,000
	Annual Maintenance	$800	$1,200	$4,000
Total		$900	$11,350	$24,000

SIGNAL EQUIPMENT DATA

INTERSECTION: Kenyon Rd & Tower Dr

DATE: 7/2/14

POWER: Underground

ZONE: 1

ID: 104

CONTROLLER:
BRAND: Peek Traffic
MODEL: 3000 Series

SOFTWARE VER: 5921 v3.8 7/13

DETECTORS:
LOOP:

VIDEO: Iteris Vantage Plus

PUSHBUTTONS: None

POLE DATA

POLE NO.	POLE TYPE	POLE MATL.	TYPE OF BASE	ARM LENGTH / PEDSTL. HEIGHT		REMARKS
1	3	2	1	24		
2	4	2	2	24		Camera and 2 A's on it
3	3	2	2	24		

POLE TYPE
1. SINGLE MAST ARM
2. TWIN MAST ARM
3. COMBINATION
4. PEDESTAL
5. UTILITY
6. OTHER

POLE MATL.
1. ALUMINUM
2. STEEL
3. WOOD
4. OTHER

TYPE OF BASE
1. PLATE
2. STEEL TRANSFORMER
3. ALUM. TRANSFORMER

AUXILIARY EQUIPMENT

VIDEO: Iteris Vantage Plus

PRE-EMPTION:

CONFLICT MONITOR: EDU MMU-16

BATTERY BACK-UP: None

DETECTOR AMP: Peek Traffic- Not plugged in

COMMUNICATION:

SIGNAL TIMING DATA

INTERSECTION: Kenyon Rd & Tower Dr
CONTROLLER: Peek Traffic 3000 Series
DATE: 7/2/14 - Existing Timings

Basic Timing Data

	Ph1 -	Ph2 - WB	Ph3 -	Ph4 - SB	Ph5 -	Ph6 - EB	Ph7 -	Ph8 -
Min Grn		20		10		20		
Passage		5.0		5.0		5.0		
Max 1		30		30		30		
Max 2		30		30		30		
Yellow		5.0		4.0		5.0		
Red Clr		1.0		1.0		1.0		
Walk								
Ped Clear								
Recall		Min		Min		Min		
Lock/Non		Lock		Non		Lock		
Act/Non-Act								

Coordination Plan Data

Dial 1/Split 1 Cycle: Offset:

Phase	1	2	3	4	5	6	7	8
Time								
Mode								

Active Periods:

Dial 2/Split 1 Cycle: Offset:

Phase	1	2	3	4	5	6	7	8
Time								
Mode								

Active Periods:

Dial 3/Split 1 Cycle: Offset:

Phase	1	2	3	4	5	6	7	8
Time								
Mode								

Active Periods:

Phasing

N

INDICATE NORTH

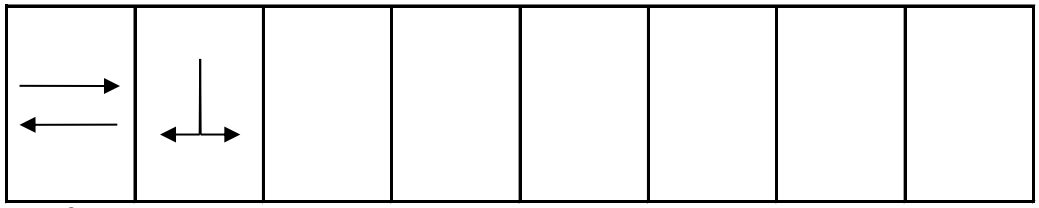

2 & 6 4

SIGNAL LAYOUT: TOWER DR & KENYON ROAD

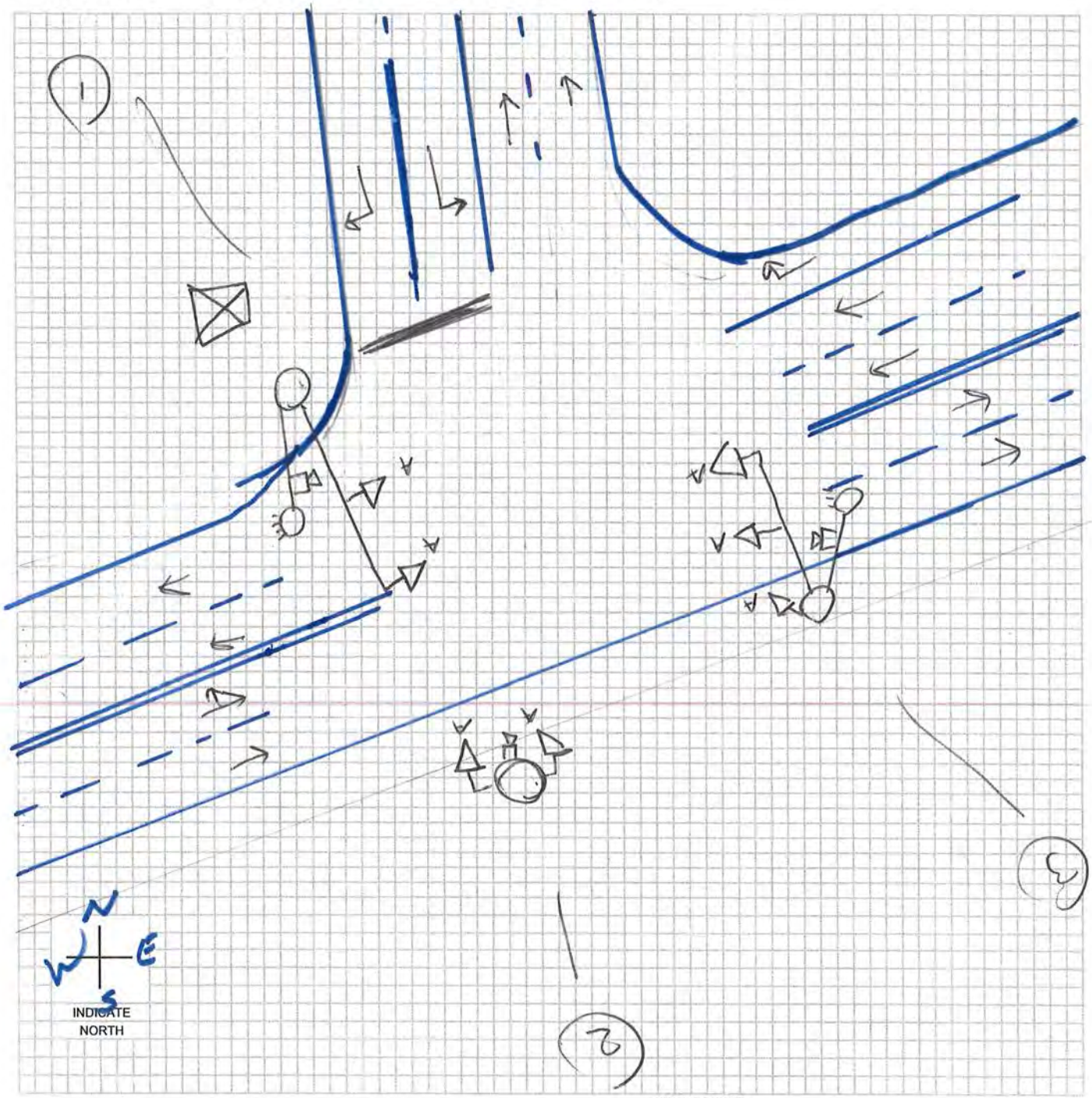

LEGEND

- (7) POLE & NUMBER
- SIGNAL INDICATION
- PEDESTRIAN SIGNAL INDICATION
- PB PUSHBUTTON
- 00-00-PD LOOP DECTETOR
- DISTANCE FROM STOP LINE - AREA OF DETECTION - PRESENCE PR; PULSE P; DELAY D; NO DELAY ND; EXTENSION E
- CONTROLLER
- (M) METER
- VIDEO DET CAMERA

SIGNAL FACES

A	B	C	D	E	F	G	H	I	J	K	L	M	O
12 R	12 R	12 R	12 R	12 R	12 R	12 ◄R	12 ◄R	12 R	12 R	DW	W/DW	W DW	
12 Y	12 ◄Y / 12 Y	12 Y	12 Y	12 Y	12 ◄Y	12 ◄Y	12 ◄Y	12 Y	12 Y	W	CD		
12 G	12 ◄G / 12 G	12 G	12 G	12 ◄G	12 ◄G	12 ◄G	12 ◄FY	12 G	12 G			N: W CD DW	
		12 ◄G	12 ◄Y				12 ◄G	12 G►	12 Y►				
			12 ◄G						12 G►				

-* OPTICALLY PROGRAMMABLE

Intersection: Kenyon Rd & Tower Dr ID #: 104

Crash Summary	**Trends**
1. Crash rate is just below statewide average (0.74 crashes/MEV) 2. 12 of 41 crashes were injury crashes. The most severe crash was a minor injury. 3. Failure to yield right-of-way making a left turn (25%) was reported most frequently as the major cause (13 crashes indicated the surface condition was wet, ice, snow, or slush) 4. No vehicle reported striking a fixed object 5. 51% of the crashes occurred between 6 AM and 12 PM. 6. 40% of the drivers involved in the crashes were under the age of 30.	1. Over half of the crashes occurred between 2010 and 2013. 2. Crash types were nearly equal across broadside/right angle, rear-end, angle-oncoming left, and sideswipe. Only broadside/right angle had four more crashes than the remaining. 3. 75% of the crashes involved westbound vehicles.

Mitigation Options / Potential Improvements

1. No significant safety concern at intersection. Continue to monitor if safety concern arises.
2. If/when development occurs and connects as a south leg to the intersection, consider widening Kenyon Rd to include left turn lanes. This would reduce the potential for rear-end collisions and give the opportunity to add protected/permissive left turn phasing.

Funding Potential

1. Not needed at this time

Cost Opinion

Intersection	Item	Period for Modification		
		Short-Term (0-2 Year)	Mid-Term (2-5 Years)	Long-Term (5-15 Years)
Kenyon Rd & Tower Dr	Construct Left Turn Lanes on Kenyon Rd *		$400,000	
Total			$400,000	

*- Includes new traffic signal

Intersection Crash Summary

Location: Kenyon Rd & Tower Dr
City/County: Fort Dodge, Webster County
Time Period: 2004-May 2014 Crash Period = 10.5 years
Prepared by: OMV

NUMBER OF CRASHES

0	Fatal Crashes	0 fatalities	0 injuries
0	Major Injury Crashes		0 injuries
2	Minor Injury Crashes		2 injuries
10	Possible/Unknown Injury Crashes		12 injuries
29	Property Damage Only Crashes		
Totals: 41	Crashes	0 fatalities	14 injuries

CRASH RATES

Total Crash Rate =	41	/	55.19 MEV	=	0.74 Total Crashes/MEV
Fatal Crash Rate =	0	/	55.19 MEV	=	0.00 Fatal Crashes/MEV
Fatal/Injury Crash Rate =	12	/	55.19 MEV	=	0.22 F & I Crashes/MEV

CRASH FREQUENCY

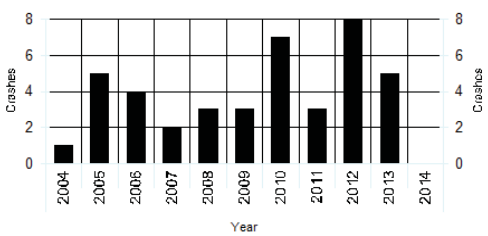

CRASH TYPE

0 Head-on	6 Sideswipe, Same Direction	Non Vehicle Collision Type	
9 Rear-end Crash	3 Sideswipe, Opposite Direction	0 Pedestrian	
13 Broadside/Right angle Crash	0 Parked	0 Bicycle	
9 Angle, Oncoming Left Turn	0 Other	0 Fixed Object	
0 Backing	0 Unknown	1 No Object Indicated	

TRAFFIC - AADT

North Approach =	6900
South Approach =	0
East Approach =	13600
West Approach =	8300
Million Entering Vehicles (MEV) =	55.19

Notes:
IDOT 2007 AADT

Tower Dr and Kenyon Rd

2004 - 2014 Reportable Crashes

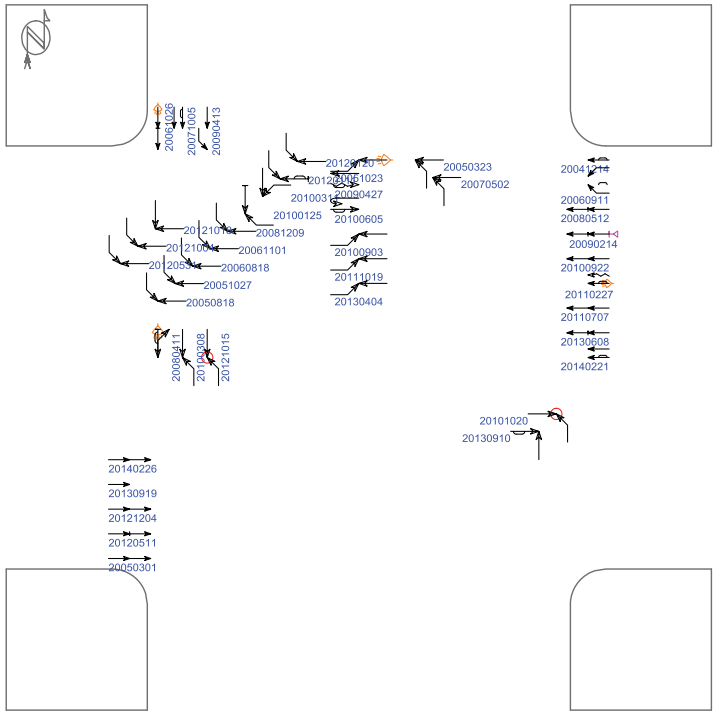

(0) crashes could not be placed in this schematic

Straight
Stopped
Unknown
Backing
Overtaking
Sideswipe
Parked
Erratic
Out of control
Right turn
Left turn
U-turn
Pedestrian
Bicycle
Injury
Fatality
Nighttime
DUI
Fixed objects:
General
Signal
Tree
Pole
Curb
Animal
3rd vehicle
Extra data

Pd' Programming, Inc. 07/10/2014

Iowa Department of Transportation

Major Cause Summary

Tower Dr and Kenyon Rd

Report Version 1.1 Jan 2005

Analysis Years: 2004 [1], 2005 [5], 2006 [4], 2007 [2], 2008 [3], 2009 [3], 2010 [7], 2011 [3], 2012 [8], 2013 [5]

Crash Summary:

Fatal	-
Major Injury	-
Minor Injury	2
Possible/Unknown	10
PDO	29
Total Crashes	41

Injury Summary:

Fatal	-
Major Injury	-
Minor Injury	2
Possible	11
Unknown	1
Total Injuries	14

TOT Property Damage: $212,666

AVG Property Damage: $5,187

Surface Condition Summary:

Dry	28
Wet	8
Ice	-
Snow	4
Slush	1
Sand/Dirt/Oil/Gravel	-
Water	-
Other	-
Unknown	-
Not Reported	-
Total Crashes	41

Major Cause Summary:

	Animal		Improper Backing
4	Ran Traffic Signal		Illegally Parked/Unattended
	Ran Stop Sign	1	Swerving/Evasive Action
	Crossed Centerline		Over-Correcting/Over-Steering
	FTYROW: At Uncontrolled Intersection		Downhill Runaway
1	FTYROW: Making Right Turn on Red Signal		Equipment Failure
	FTYROW: From Stop Sign		Separation of Units
	FTYROW: From Yield Sign		Ran Off Road - Right
10	FTYROW: Making Left Turn		Ran Off Road - Straight
	FTYROW: From Driveway		Ran Off Road - Left
	FTYROW: From Parked Position		Lost Control
	FTYROW: To Pedestrian	1	Inattentive/Distracted By: Passenger
3	FTYROW: Other (explain in narrative)		Inattentive/Distracted By: Use of Phone or Other
	Traveling Wrong Way or on Wrong Side of Rd	1	Inattentive/Distracted By: Fallen Object
1	Driving Too Fast for Conditions		Inattentive/Distracted By: Fatigued/Asleep
	Exceeded Authorized Speed	1	Other: Vision Obstructed
2	Made Improper Turn		Oversized Load/ Oversized Vehicle
	Improper Lane Change		Cargo/Equipment Loss or Shift
4	Followed Too Close	5	Other: Other Improper Action
	Disregarded Railroad Signal	3	Unknown
	Disregarded Warning Sign	3	Other: No Improper Action
1	Operating Vehicle in Reckless/Aggressive Manner		None Indicated

Selection Filter:

None

Analyst: OMV

Notes: Radius = 250'

Iowa Department of Transportation

Driver and Time Summary

Tower Dr and Kenyon Rd

Report Version 1.0 Aug 2006

Crash Time of Day Summary:

From / To	00:00 01:59	02:00 03:59	04:00 05:59	06:00 07:59	08:00 09:59	10:00 11:59	12:00 13:59	14:00 15:59	16:00 17:59	18:00 19:59	20:00 21:59	22:00 23:59	NR	Total	%
SUN	-	-	-	-	-	-	-	-	-	2	1	-	-	3	7
MON	-	-	-	2	1	1	1	2	-	-	-	-	-	7	17
TUE	-	-	-	-	3	-	-	1	1	-	-	-	-	5	12
WED	-	-	-	3	2	-	-	1	1	-	-	-	-	7	17
THU	-	-	-	3	-	3	1	2	1	-	-	-	-	10	24
FRI	-	-	-	1	-	1	2	-	1	-	1	-	-	6	15
SAT	-	-	-	1	-	-	1	-	1	-	-	-	-	3	7
Tot.				10	6	5	5	6	5	2	2			41	
%				24	15	12	12	15	12	5	5				100

Driver Age/Gender Summary:

Age	Male	Female	NR	Drivers	%
<14	-	-	-		
14	-	-	-		
15	-	-	-		
16	1	-	-	1	1
17	-	-	-		
18	1	3	-	4	5
19	8	5	-	13	15
20	1	3	-	4	5
21 to 24	2	4	-	6	7
25 to 29	3	3	-	6	7
30 to 34	2	3	-	5	6
35 to 39	5	2	-	7	8
40 to 44	3	1	-	4	5
45 to 49	1	1	-	2	2
50 to 54	5	2	-	7	8
55 to 59	3	5	-	8	9
60 to 64	-	4	-	4	5
65 to 69	3	-	-	3	4
70 to 74	1	1	-	2	2
75 to 79	1	-	-	1	1
80 to 84	1	1	-	2	2
85 to 89	-	1	-	1	1
90 to 94	-	-	-		
95 plus	-	-	-		
NR	-	1	4	5	6
Drivers	41	40	4	85	
%	48	47	5		100

Drug/Alcohol Summary:

	Total	%
Drug		
Alcohol, Less than Statutory	1	2
Alcohol, Statutory		
Drug/Alcohol, Less than Statutory		
Drug/Alcohol, Statutory		
Refused		
Under Influence of Alc/Drugs/Meds		
None Indicated	40	98
Total Crashes	41	100

Fixed Object Struck Summary:

	Vehs.	%
Bridge/Bridge rail/Overpass		
Underpass/Structure Support		
Culvert		
Ditch/Embankment		
Curb/Island/Raised Median		
Guardrail		
Concrete Barrier		
Tree		
Pole - Utility/Light/Etc		
Sign Post		
Mailbox		
Impact Attenuator		
Other Fixed Object		
None	85	100
Total Vehicles	85	100

Selection Filter:

None

Analyst: OMV

Notes: Radius = 250'

Intersection: Kenyon Rd & Tower Dr ID#: 104

Lane Width	**Turn Lanes**
Approaching N/S: 12 ft E/W: 12 ft	Left turn lanes on N approach Right turn lanes N/E approaches
Sidewalk/ADA Ramps	**Lighting**
No sidewalks/ramps exists	Both mast arm signal poles are combination signal and lighting poles. Housing indicated 400 watt high pressure sodium fixtures.
Parking	**Access/Driveways**
No parking exists along both streets.	No driveways exist along Kenyon Rd. A driveway to a gas station is located 150 ft north along Tower Dr, near the Ave O intersection.
Miscellaneous	
1. The intersection is a T-intersection.	

Cost Opinion

Intersection	Item	Period for Modification		
		Short-Term (0-2 Years)	Mid-Term (2-5 Years)	Long-Term (5-15 Years)
Kenyon Rd & Tower Dr	None			
Total				

CLICK TO RETURN TO SIGNAL LOCATION MAP

Kenyon Rd & Ave E ID#: 105

Intersection: Kenyon Rd & Ave E ID#: 105

Lane Width	**Turn Lanes**
Approaching N/S: 12 ft E/W: 12 ft	Offset left turn lanes on N/S approach Right turn lanes N approach There are 2 approaching lanes E/W however no lane designation exists
Sidewalk/ADA Ramps	**Lighting**
No sidewalks exists in SE corner. NE corner has vegetation growing in the cracks with a single detectable warning panel to cross Kenyon Rd. In the NW and SW corners, panels are stacked and may have to cross 2 panels. The median on the west side also has panels even though it is only 6 ft wide. Panels should not be installed in the median unless the intent is for people to stop in the median. The median is not wide enough nor has a pushbutton for people to use.	All mast arm signal poles are combination signal and lighting poles. Housing indicated 250 watt high pressure sodium fixtures.
Parking	**Access/Driveways**
No parking exists along both streets.	No driveways exist along Kenyon Rd. Both Ave E and the driveway into the hospital have intersections within 150 ft of the traffic signal.
Miscellaneous	
1. ADA compliant sidewalks need to be constructed to the pedestrian pushbuttons on the east side of Kenyon Rd. 2. Install compliant pavement markings and designate lane movements for Ave E and hospital approaches (E/W). Some images reviewed indicate yellow paint was used to separate lanes on the hospital approach (W). Yellow paint should be used only to indicate the leftmost side of the traveled lane. White paint should separate lanes in the same direction.	

Cost Opinion

Intersection	Item	Period for Modification		
		Short-Term (0-2 Years)	Mid-Term (2-5 Years)	Long-Term (5-15 Years)
Kenyon Rd & Ave E	Reconstruct Ramps along Hospital for ADA Compliance	$400		
	Construct Sidewalks to Pushbutton Locations	$2,000		
Total		$2,400		

SIGNAL EQUIPMENT DATA

INTERSECTION: Kenyon Rd and Ave E

DATE: 7/2/14

POWER: Underground

ZONE: 1

ID: 105

CONTROLLER:
BRAND: Eagle Traffic Control Systems
MODEL: ATCnX
EPAC 3808M52
SOFTWARE VER: OS # 3.32g (OCT 03) Siemens ITS

DETECTORS:
LOOP: None

VIDEO: Iteris Vantage Plus

PUSHBUTTONS: Yes

POLE DATA

POLE NO.	POLE TYPE	POLE MATL.	TYPE OF BASE	ARM LENGTH / PEDSTL. HEIGHT		REMARKS
1	3	2	2	30		PB bad condition, sign to cross E faded
2	3	2	2	50		Left turn on yield sign on pole, PB sign to cross Kenyon Rd faded
3	3	2	2	30		PB sign faded, W/DW facing W broken
4	3	2	2	50		PB sign faded

POLE TYPE
1. SINGLE MAST ARM
2. TWIN MAST ARM
3. COMBINATION
4. PEDESTAL
5. UTILITY
6. OTHER

POLE MATL.
1. ALUMINUM
2. STEEL
3. WOOD
4. OTHER

TYPE OF BASE
1. PLATE
2. STEEL TRANSFORMER
3. ALUM. TRANSFORMER

AUXILIARY EQUIPMENT

VIDEO: Iteris Vantage Plus

PRE-EMPTION

TV monitor: Vicon VM5094

CONFLICT MONITOR: EDI MMU-16LE

BATTERY BACK-UP: Alpha FXM1100
4 extra batteries

DETECTOR AMP

COMMUNICATION
Controller said status for port 2= online

SIGNAL TIMING DATA

INTERSECTION: Kenyon Rd and Ave E

CONTROLLER: Eagle Traffic Control Systems

DATE: 7/2/14 - Existing Timings

Basic Timing Data

	Ph1 - NEL	Ph2 - SW	Ph3 -	Ph4 - NW	Ph5 -SWL	Ph6 - NE	Ph7 -	Ph8 - SE
Min Grn	6	15	1	8	6	15	1	8
Passage	4.5	4.5	0.1	4.0	4.5	4.5	0.1	4.0
Max 1	15	35	1	30	15	35	1	30
Max 2	30	50	30	50	30	50	30	50
Yellow	5.0	5.0	4.0	4.0	5.0	5.0	4.0	4.0
Red Clr	1.0	1.0	1.0	1.0	1.0	1.0	1.0	1.0
Walk	0	7	0	7	0	7	0	7
Ped Clear	0	15	0	15	0	15	0	15
Recall		yes				yes		
Lock/Non	Non	Non	Non	Non	Non	Non	Non	Non
Act/Non-Act		Non		Non		Non		Non

Coordination Plan Data

Not in Coordination

Dial 1/Split 1 Cycle: Offset:

Phase	1	2	3	4	5	6	7	8
Time	0	0	0	0	0	0	0	0
Mode	Act	Coor PH	Omit	Act	Act	Coor PH	Omit	Act

Active Periods:

Dial 2/Split 1 Cycle: Offset:

Phase	1	2	3	4	5	6	7	8
Time								
Mode								

Active Periods:

Dial 3/Split 1 Cycle: Offset:

Phase	1	2	3	4	5	6	7	8
Time								
Mode								

Active Periods:

Phasing

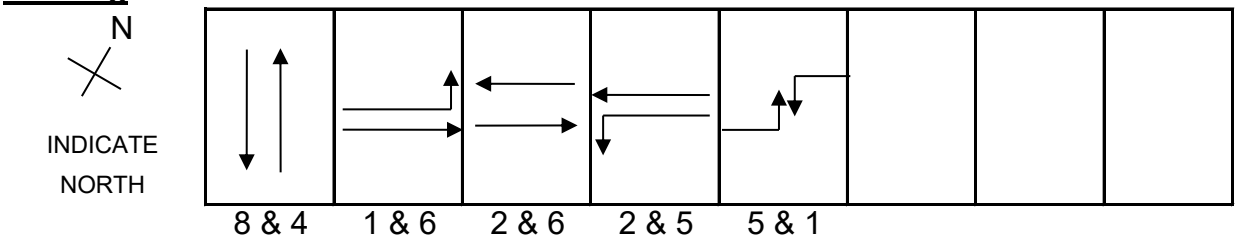

SIGNAL LAYOUT: Kenyon ROAD & AVE E

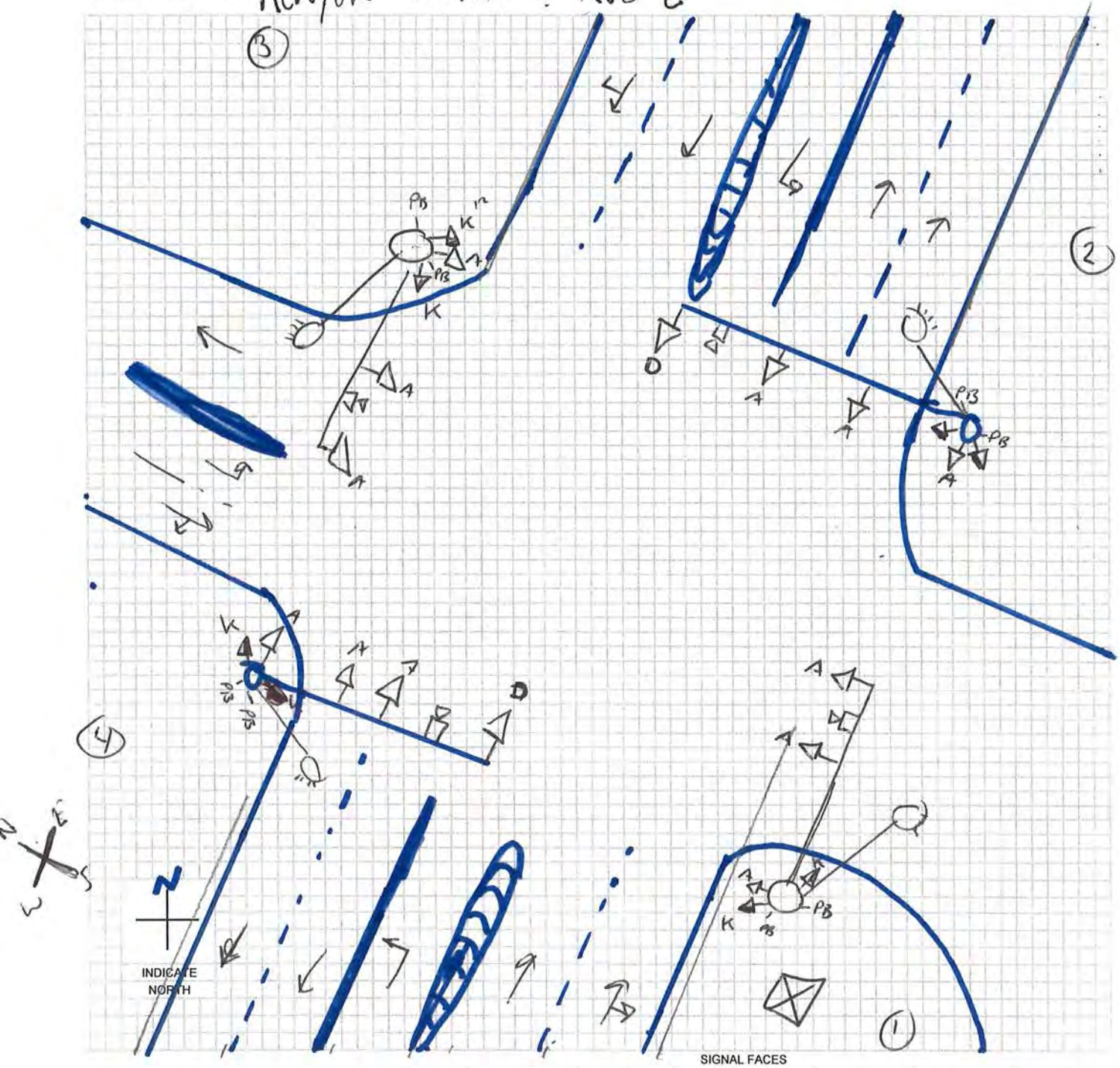

LEGEND

- (7) POLE & NUMBER
- SIGNAL INDICATION
- PEDESTRIAN SIGNAL INDICATION
- PB PUSHBUTTON
- 00-00-PD LOOP DECTETOR
- DISTANCE FROM STOP LINE - AREA OF DETECTION - PRESENCE PR; PULSE P; DELAY D; NO DELAY ND; EXTENSION E
- CONTROLLER
- (M) METER
- VIDEO DET CAMERA

SIGNAL FACES

A	B	C	D	E	F	G	H	I	J	K	L	M	O
12 R	12 R	12 R	12 R	12 R	12 R	12 ◄R	12 ◄R	12 R	12 R	DW	W/DW	W DW	
12 Y	12 ◄Y	12 Y	12 Y	12 Y	12 ◄Y	12 ◄Y	12 ◄Y	12 Y	12 Y	W	CD		
12 G	12 ◄G	12 G	12 G	12 ◄G	12 ◄G	12 ◄G	12 ◄FY	12 G	12 G			N	
	12 Y	12 ◄G	12 Y				12 ◄G	12 G►	12 Y►			W CD DW	
	12 G		12 ◄G						12 G►				

-* OPTICALLY PROGRAMMABLE

Intersection: Kenyon Rd & Ave E ID #: 105

Crash Summary	**Trends**
1. Crash rate is below statewide average (0.46 crashes/MEV) 2. 12 of 30 crashes were injury crashes. There was a major injury crash. 3. Failure to yield right-of-way making a left turn (27%) was reported most frequently as the major cause (7 crashes indicated the surface condition was wet, ice, snow, or slush) 4. Three vehicles were reported as striking a fixed object: a curb/island/raised median (2) and a pole (1) 5. 50% of the crashes occurred between 10 AM and 2 PM. 6. 25% of the drivers involved in the crashes were under the age of 30. 37% of the drivers were over the age of 60.	1. Most years had between 2 and 4 crashes. The only exceptions are 2004 (5) and 2009 (1). 2. 57% of the crashes were either angle-oncoming left or rear-end type. 3. Due to the inconsistent reporting of direction of travel, because of the angle of the intersection, it is difficult to determine trends in direction of travel.
Mitigation Options / Potential Improvements	
1. No significant safety concern at intersection. Continue to monitor if safety concern arises.	
Funding Potential	
1. Not needed at this time	

Cost Opinion

Intersection	Item	Period for Modification		
		Short-Term (0-2 Year)	Mid-Term (2-5 Years)	Long-Term (5-15 Years)
Kenyon Rd & Ave E	None			
Total				

Intersection Crash Summary

Location: Kenyon Rd and Ave E
City/County: Fort Dodge, Webster County
Time Period: 2004-May 2014 Crash Period = 10.5 years
Prepared by: OMV

NUMBER OF CRASHES

0	Fatal Crashes	0 fatalities	0 injuries
1	Major Injury Crashes		1 injuries
3	Minor Injury Crashes		4 injuries
8	Possible/Unknown Injury Crashes		13 injuries
18	Property Damage Only Crashes		
Totals: 30	Crashes	0 fatalities	18 injuries

CRASH RATES

Total Crash Rate =	30	/	65.69 MEV	=	0.46 Total Crashes/MEV
Fatal Crash Rate =	0	/	65.69 MEV	=	0.00 Fatal Crashes/MEV
Fatal/Injury Crash Rate =	12	/	65.69 MEV	=	0.18 F & I Crashes/MEV

CRASH FREQUENCY

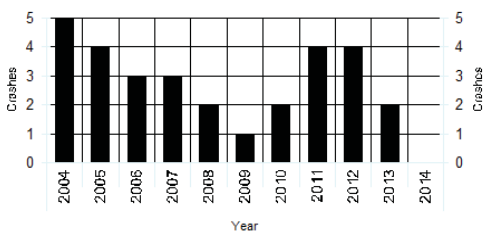

CRASH TYPE

0 Head-on	3 Sideswipe, Same Direction	Non Vehicle Collision Type
8 Rear-end Crash	0 Sideswipe, Opposite Direction	0 Pedestrian
5 Broadside/Right angle Crash	0 Parked	0 Bicycle
9 Angle, Oncoming Left Turn	0 Other	3 Fixed Object
0 Backing	0 Unknown	2 No Object Reported

TRAFFIC - AADT

North Approach =	14900
South Approach =	12100
East Approach =	1280
West Approach =	6000
Million Entering Vehicles (MEV) =	65.69

Notes:
IDOT 2007 AADT

Kenyon Rd and Ave E

2004 - 2014 Reportable Crashes

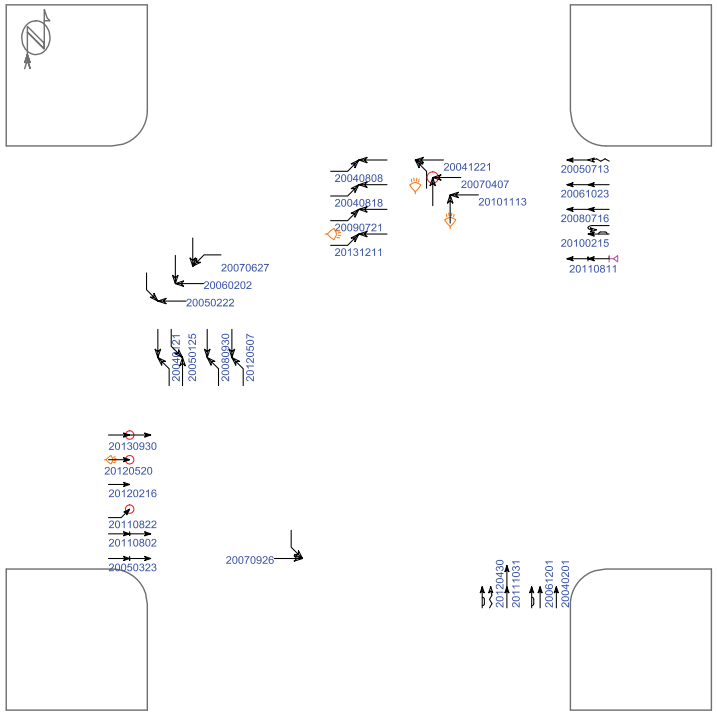

(0) crashes could not be placed in this schematic

Straight
Stopped
Unknown
Backing
Overtaking
Sideswipe
Parked
Erratic
Out of control
Right turn
Left turn
U-turn
Pedestrian
Bicycle
Injury
Fatality
Nighttime
DUI
Fixed objects:
General
Signal
Tree
Pole
Curb
Animal
3rd vehicle
Extra data

Pd' Programming, Inc. 07/10/2014

Iowa Department of Transportation

Major Cause Summary

Kenyon Rd and Ave E

Report Version 1.1 Jan 2005

Analysis Years: 2004 [5], 2005 [4], 2006 [3], 2007 [3], 2008 [2], 2009 [1], 2010 [2], 2011 [4], 2012 [4], 2013 [2]

Crash Summary:

Fatal	-
Major Injury	1
Minor Injury	3
Possible/Unknown	8
PDO	18
Total Crashes	30

Injury Summary:

Fatal	-
Major Injury	1
Minor Injury	4
Possible	12
Unknown	1
Total Injuries	18

TOT Property Damage: $129,340

AVG Property Damage: $4,311

Surface Condition Summary:

Dry	23
Wet	3
Ice	1
Snow	2
Slush	1
Sand/Dirt/Oil/Gravel	-
Water	-
Other	-
Unknown	-
Not Reported	-
Total Crashes	30

Major Cause Summary:

	Animal		Improper Backing
3	Ran Traffic Signal		Illegally Parked/Unattended
	Ran Stop Sign	1	Swerving/Evasive Action
2	Crossed Centerline		Over-Correcting/Over-Steering
	FTYROW: At Uncontrolled Intersection		Downhill Runaway
	FTYROW: Making Right Turn on Red Signal		Equipment Failure
	FTYROW: From Stop Sign		Separation of Units
	FTYROW: From Yield Sign	2	Ran Off Road - Right
8	FTYROW: Making Left Turn		Ran Off Road - Straight
	FTYROW: From Driveway		Ran Off Road - Left
	FTYROW: From Parked Position	1	Lost Control
1	FTYROW: To Pedestrian		Inattentive/Distracted By: Passenger
	FTYROW: Other (explain in narrative)		Inattentive/Distracted By: Use of Phone or Other
	Traveling Wrong Way or on Wrong Side of Rd		Inattentive/Distracted By: Fallen Object
	Driving Too Fast for Conditions		Inattentive/Distracted By: Fatigued/Asleep
	Exceeded Authorized Speed		Other: Vision Obstructed
2	Made Improper Turn		Oversized Load/ Oversized Vehicle
	Improper Lane Change		Cargo/Equipment Loss or Shift
3	Followed Too Close	3	Other: Other Improper Action
	Disregarded Railroad Signal	2	Unknown
	Disregarded Warning Sign	1	Other: No Improper Action
1	Operating Vehicle in Reckless/Aggressive Manner		None Indicated

Selection Filter:

None

Analyst: OMV

Notes: Radius = 150'

Iowa Department of Transportation

Driver and Time Summary

Kenyon Rd and Ave E

Report Version 1.0 Aug 2006

Crash Time of Day Summary:

From / To	00:00 01:59	02:00 03:59	04:00 05:59	06:00 07:59	08:00 09:59	10:00 11:59	12:00 13:59	14:00 15:59	16:00 17:59	18:00 19:59	20:00 21:59	22:00 23:59	NR	Total	%
SUN	-	-	-	-	-	1	1	-	-	-	-	1	-	3	10
MON	-	-	-	-	-	2	5	-	-	-	-	-	-	7	23
TUE	-	-	-	-	-	1	3	-	2	-	-	-	-	6	20
WED	-	-	-	4	1	1	1	-	-	1	-	-	-	8	27
THU	-	-	-	-	-	-	-	-	2	1	-	-	-	3	10
FRI	-	-	-	-	-	-	-	1	-	-	-	-	-	1	3
SAT	-	-	-	1	-	-	-	-	-	1	-	-	-	2	7
Tot.				5	1	5	10	1	4	3		1		30	
%				17	3	17	33	3	13	10		3			100

Driver Age/Gender Summary:

Age	Male	Female	NR	Drivers	%
<14	-	-	-		
14	-	-	-		
15	-	-	-		
16	-	-	-		
17	-	1	-	1	2
18	2	-	-	2	4
19	1	1	-	2	4
20	-	1	-	1	2
21 to 24	2	-	-	2	4
25 to 29	1	4	-	5	9
30 to 34	2	3	-	5	9
35 to 39	3	-	-	3	5
40 to 44	4	-	-	4	7
45 to 49	1	2	-	3	5
50 to 54	1	1	-	2	4
55 to 59	4	1	-	5	9
60 to 64	1	2	-	3	5
65 to 69	2	1	-	3	5
70 to 74	3	2	-	5	9
75 to 79	2	2	-	4	7
80 to 84	4	-	-	4	7
85 to 89	1	1	-	2	4
90 to 94	-	-	-		
95 plus	-	-	-		
NR	1	-	-	1	2
Drivers	35	22	0	57	
%	61	39	0		100

Drug/Alcohol Summary:

	Total	%
Drug	1	3
Alcohol, Less than Statutory		
Alcohol, Statutory		
Drug/Alcohol, Less than Statutory		
Drug/Alcohol, Statutory		
Refused		
Under Influence of Alc/Drugs/Meds		
None Indicated	29	97
Total Crashes	30	100

Fixed Object Struck Summary:

	Vehs.	%
Bridge/Bridge rail/Overpass		
Underpass/Structure Support		
Culvert		
Ditch/Embankment		
Curb/Island/Raised Median	2	4
Guardrail		
Concrete Barrier		
Tree		
Pole - Utility/Light/Etc	1	2
Sign Post		
Mailbox		
Impact Attenuator		
Other Fixed Object		
None	54	95
Total Vehicles	57	100

Selection Filter:

None

Analyst: OMV

Notes: Radius = 150'

Intersection: Kenyon Rd & Ave E ID#: 105

Signal Evaluation	MUTCD Issues
1. Siemens Eagle M52 signal controller 2. Iteris Vantage Plus video detection 3. Protected/permissive left turn phasing on Kenyon Rd 4. Has a fiber optic distribution panel with jumpers to the signal controller. 5. There is a telephone connection within signal cabinet. 6. Does have battery back-up system.	1. Have circular indications over left turn lanes. Acceptable per previous MUTCD. Should be changed to flashing yellow arrow (arrow only heads) to comply with 2009 Edition. 2. Faded pedestrian signs need to be replaced. 3. Pedestrian signal heads should be replaced to include countdown timers. 4. There are two lane approaches along Ave E, but no signing designating movements in each lane. 5. When replacing street name signs, signs on mast arms shall have 12”, upper and lowercase lettering 6. Update clearance (yellow and red) and pedestrian intervals to current standards of practice
Misc. Comments	
1. The fiber optic cable indicates communication with adjacent signal likely Kenyon Rd & Ave C intersection.	

Budget Needs

Intersection	Item	Period for Modification		
		Short-Term (0-2 Years)	Mid-Term (2-5 Years)	Long-Term (5-15 Years)
Kenyon Rd & Ave E	Replace Missing Visor	$100		
	Replace Pedestrian Pushbuttons and Signs	$2,400		
	Convert Pedestrian Signals to include Countdown Timers	$6,400		
	Install Lane Control Signs		$2,400	
	Replace Street Name Signs		$2,600	
	Implement Flashing Yellow Arrows		$30,000	
	Annual Maintenance	$800	$1,200	$4,000
Total		$9,700	$36,200	$4,000

CLICK TO RETURN TO SIGNAL LOCATION MAP

Kenyon Rd & Ave C ID#: 106

Intersection: Kenyon Rd & Ave C ID#: 106

Lane Width	**Turn Lanes**
Approaching N/S: 12 ft E: 12 ft W - 10 ft	No left turn lanes Right turn lane on W approach
Sidewalk/ADA Ramps	**Lighting**
No sidewalks exist in NE and SE corners. A trail was constructed along the west side of Kenyon Rd with detectable warning panels at the intersection. Placement of panels seems appropriate. Pushbuttons were installed on a pedestal pole in the NW corner. There still is a gap between the trail and pole in the SW corner with the pushbutton height being higher than typical to the trail.	All mast arm signal poles are combination signal and lighting poles. Housing indicated 250 watt high pressure sodium fixtures.
Parking	**Access/Driveways**
No parking exists along both streets.	No driveways exist along Kenyon Rd. Ave C has driveways within 150 ft of the traffic signal.
Miscellaneous	
1. Construct ADA compliant sidewalks to the pedestrian pushbuttons on the east side of Kenyon Rd. 2. Install additional sidewalk/trail to the pole in the SW corner or relocate pushbuttons to pedestal pole adjacent to the trail.	

Cost Opinion

Intersection	Item	Period for Modification		
		Short-Term (0-2 Years)	Mid-Term (2-5 Years)	Long-Term (5-15 Years)
Kenyon Rd & Ave C				
Total				

SIGNAL EQUIPMENT DATA

INTERSECTION: Kenyon Rd and Ave C

DATE: 7/2/14

POWER: Underground

ZONE: 1

ID: 106

CONTROLLER:
BRAND: Eagle Genesis
MODEL: EPAC3608M42

SOFTWARE VER: OS 3.13h (APRIL 04)

DETECTORS:
LOOP: None

VIDEO: Odetics Vantage Plus

PUSHBUTTONS: Yes

POLE DATA

POLE NO.	POLE TYPE	POLE MATL.	TYPE OF BASE	ARM LENGTH / PEDSTL. HEIGHT		REMARKS
1	3	2	2	30		Can see where PB used to be
2	4	2	2	36		
3	3	2	2	30		
4	3	2	2	36		
5	4	2	2	5		PB pole

POLE TYPE
1. SINGLE MAST ARM
2. TWIN MAST ARM
3. COMBINATION
4. PEDESTAL
5. UTILITY
6. OTHER

POLE MATL.
1. ALUMINUM
2. STEEL
3. WOOD
4. OTHER

TYPE OF BASE
1. PLATE
2. STEEL TRANSFORMER
3. ALUM. TRANSFORMER

AUXILIARY EQUIPMENT

VIDEO: Odetics Vantage Plus
No TV in cabinet

PRE-EMPTION:

CONFLICT MONITOR: Peek Traffic Double Diamond

BATTERY BACK-UP: Yes, but we couldn't open it

DETECTOR AMP: None

COMMUNICATION: Offline

Also: Eagle Traffic Control Systems Mar30 Series
OS # 2.23b (JAN 98)

SIGNAL TIMING DATA

INTERSECTION: Kenyon Rd and Ave C
CONTROLLER: Eagle Genesis
DATE: 7/2/14 - Existing Timings

Basic Timing Data 4 & 8-N AND S 2 & 6- E AND W

	Ph1 -	Ph2 -	Ph3 -	Ph4 -	Ph5 -	Ph6 -	Ph7 -	Ph8 -
Min Grn	10	8	10	20	10	8	10	20
Passage	4	4.0	4.0	5.0	4.0	4.0	4.0	5.0
Max 1	25	15	25.0	35	25	20	25	35
Max 2	30	50	30	50	30	50	30	50
Yellow	4.0	4.0	4.0	4.0	4.0	4.0	4.0	4.0
Red Clr	1.0	1.0	1.0	1.0	1.0	1.0	1.0	1.0
Walk	0	7	0	7	0	7	0	7
Ped Clear	0	12	0	12	0	12	0	12
Recall				MIN				MIN
Lock/Non		YES		YES		YES		YES
Act/Non-Act		NA		NA		NA		NA

Coordination Plan Data NOT IN COORDINATION

Dial 1/Split 1 Cycle: Offset:

Phase	1	2	3	4	5	6	7	8
Time								
Mode								

Active Periods:

Dial 2/Split 1 Cycle: Offset:

Phase	1	2	3	4	5	6	7	8
Time								
Mode								

Active Periods:

Dial 3/Split 1 Cycle: Offset:

Phase	1	2	3	4	5	6	7	8
Time								
Mode								

Active Periods:

Phasing

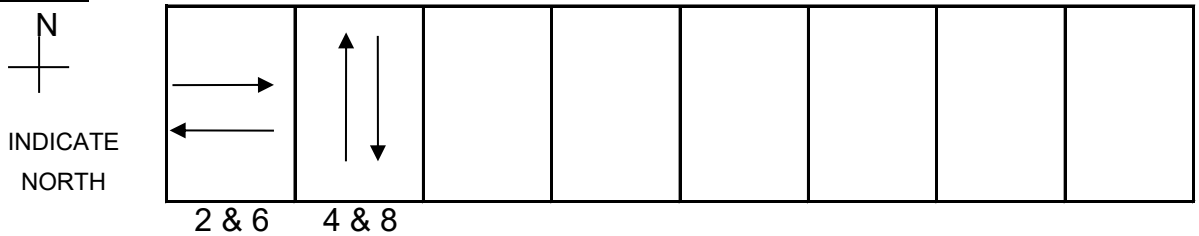

SIGNAL LAYOUT: KENYON ROAD & AVE C

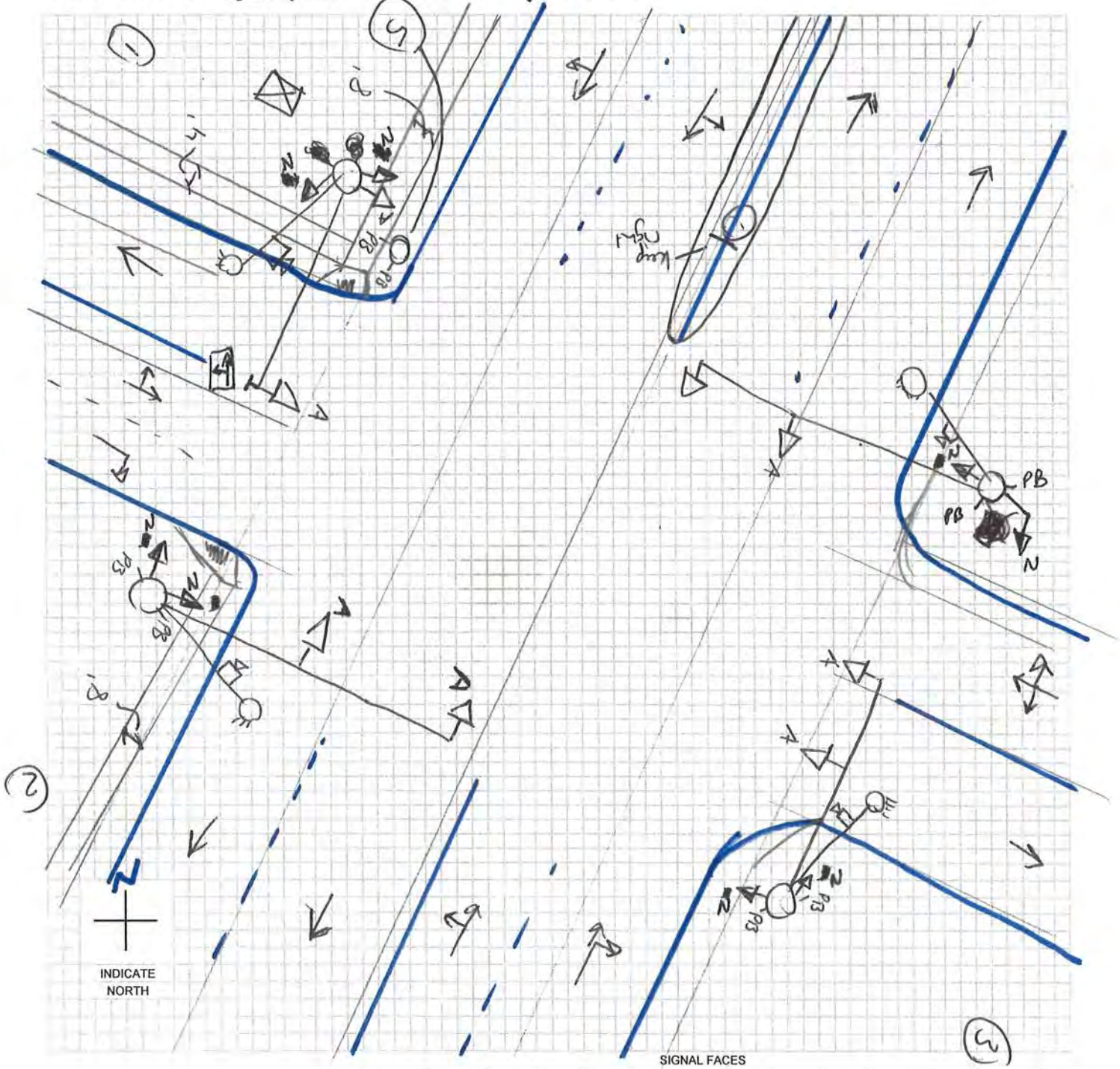

SIGNAL FACES

A	B	C	D	E	F	G	H	I	J	K	L	M	O
12 R	12 R	12 R	12 R	12 R	12 R	◄R	◄R	12 R	12 R	DW	W/DW	W DW	
12 Y	12 ◄Y	12 Y	12 Y	12 Y	12 ◄Y	12 ◄Y	12 ◄Y	12 Y	12 Y	W	CD		
12 G	12 ◄G	12 G	12 G	12 ◄G	12 ◄G	12 ◄G	12 ◄FY	12 G	12 G			N	
	12 Y	12 ◄G	12 Y				12 ◄G	12 G►	12 Y►			W CD DW	
	12 G		12 ◄G						12 G►				

LEGEND

- (7) POLE & NUMBER
- SIGNAL INDICATION
- PEDESTRIAN SIGNAL INDICATION
- PB PUSHBUTTON
- 00-00-PD LOOP DECTETOR
- DISTANCE FROM STOP LINE - AREA OF DETECTION - PRESENCE PR; PULSE P; DELAY D; NO DELAY ND; EXTENSION E
- CONTROLLER
- (M) METER
- VIDEO DET CAMERA

-* OPTICALLY PROGRAMMABLE

Intersection: Kenyon Rd & Ave C ID #: 106

Crash Summary	**Trends**
1. Crash rate is at statewide average (0.92 crashes/MEV) 2. 23 of 67 crashes were injury crashes. There were two major injury crashes. 3. Failure to yield right-of-way making a left turn (24%) and followed too close (19%) were reported most frequently as the major cause (12 crashes indicated the surface condition was wet, ice, snow, or slush) 4. Two vehicles were reported as striking a fixed object: a sign post (1) and a mailbox(1) 5. 73% of the crashes occurred between 10 AM and 6 PM. 6. 49% of the drivers involved in the crashes were under the age of 30.	1. From 2004-2008, the intersection averaged 8 crashes per year. From 2009-2013, the average was 5 crashes per year. 2. Due to the inconsistent reporting of direction of travel, because of the angle of the intersection, it is difficult to determine trends in direction of travel. 3. 48% of the crashes were rear-end type collisions. 22% were angle, oncoming left turn collisions.

Mitigation Options / Potential Improvements

1. Construct left turn lanes along Kenyon Rd. This may reduce the potential of rear-end collisions with vehicles turning left and allows for the implementation of a protected/permissive left turn phasing. Construction may be difficult with the bridge over the Des Moines River located 500 ft from the intersection. Widening Kenyon Rd may not impact the traffic signal other than modifying signal head positions

Funding Potential

1. Beyond GO bonds, TSIP may be a funding source. This may qualify for the “site specific” funding portion of TSIP.

Cost Opinion

Intersection	Item	Period for Modification		
		Short-Term (0-2 Year)	Mid-Term (2-5 Years)	Long-Term (5-15 Years)
Kenyon Rd & Ave C	Extend Sidewalk/Trail to Pushbutton Location - SW Corner	$100		
	Construct Sidewalks to Pushbutton Locations	$2,000		
Total		$2,100		

Intersection Crash Summary

Location:	Kenyon Rd and Ave C		
City/County:	Fort Dodge, Webster County		
Time Period:	2004-May 2014	Crash Period =	10.5 years
Prepared by:	OMV		

NUMBER OF CRASHES

0	Fatal Crashes	0 fatalities	0 injuries
2	Major Injury Crashes		3 injuries
6	Minor Injury Crashes		6 injuries
15	Possible/Unknown Injury Crashes		26 injuries
44	Property Damage Only Crashes		
Totals: 67	Crashes	0 fatalities	35 injuries

CRASH RATES

Total Crash Rate =	67	/	72.99 MEV	=	0.92 Total Crashes/MEV
Fatal Crash Rate =	0	/	72.99 MEV	=	0.00 Fatal Crashes/MEV
Fatal/Injury Crash Rate =	23	/	72.99 MEV	=	0.32 F & I Crashes/MEV

CRASH FREQUENCY

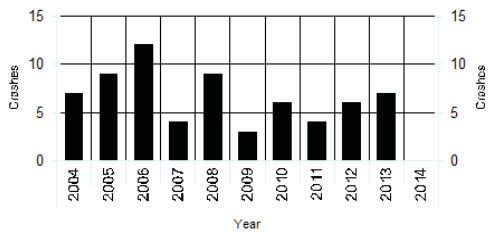

CRASH TYPE

1 Head-on	8 Sideswipe, Same Direction	Non Vehicle Collision Type	
32 Rear-end Crash	1 Sideswipe, Opposite Direction	0 Pedestrian	
9 Broadside/Right angle Crash	0 Parked	0 Bicycle	
15 Angle, Oncoming Left Turn	0 Other	1 Fixed Object	
0 Backing	0 Unknown		

TRAFFIC - AADT

North Approach =	18600
South Approach =	16400
East Approach =	690
West Approach =	2400
Million Entering Vehicles (MEV) =	72.99

Notes:
IDOT 2007 AADT

Kenyon Rd and Ave C

2004 - 2014 Reportable Crashes

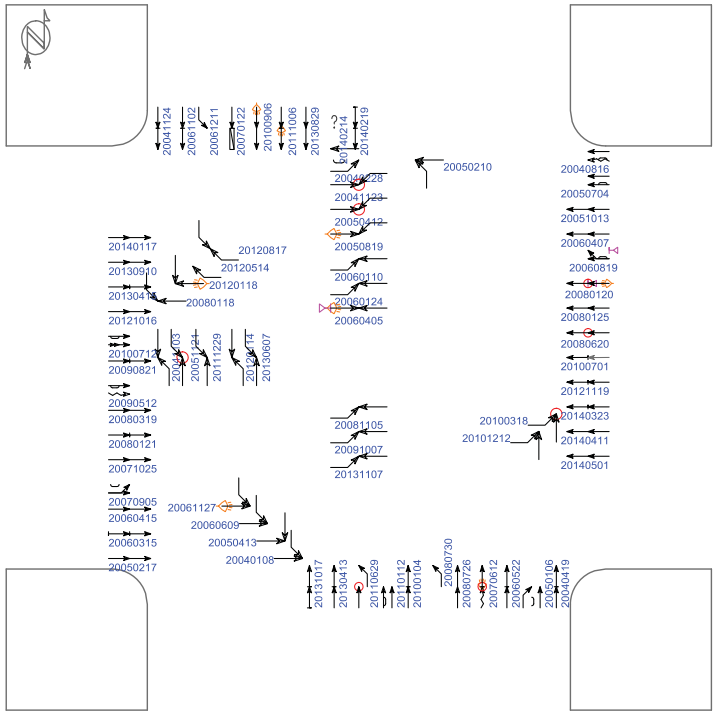

(0) crashes could not be placed in this schematic

Straight, Stopped, Unknown, Backing, Overtaking, Sideswipe, Parked, Erratic, Out of control, Right turn, Left turn, U-turn, Pedestrian, Bicycle, Injury, Fatality, Nighttime, DUI, Fixed objects: General, Signal, Tree, Pole, Curb, Animal, 3rd vehicle, Extra data

Pd' Programming, Inc. 07/10/2014

Iowa Department of Transportation

Major Cause Summary

Kenyon Rd and Ave C

Report Version 1.1 Jan 2005

Analysis Years: 2004 [7], 2005 [9], 2006 [12], 2007 [4], 2008 [9], 2009 [3], 2010 [6], 2011 [4], 2012 [6], 2013 [7]

Crash Summary:

Fatal	-
Major Injury	2
Minor Injury	6
Possible/Unknown	15
PDO	44
Total Crashes	67

Injury Summary:

Fatal	-
Major Injury	3
Minor Injury	6
Possible	22
Unknown	4
Total Injuries	35

TOT Property Damage: $393,046

AVG Property Damage: $5,866

Surface Condition Summary:

Dry	55
Wet	7
Ice	-
Snow	3
Slush	2
Sand/Dirt/Oil/Gravel	-
Water	-
Other	-
Unknown	-
Not Reported	-
Total Crashes	67

Major Cause Summary:

	Animal		Improper Backing
3	Ran Traffic Signal		Illegally Parked/Unattended
	Ran Stop Sign		Swerving/Evasive Action
2	Crossed Centerline		Over-Correcting/Over-Steering
	FTYROW: At Uncontrolled Intersection		Downhill Runaway
	FTYROW: Making Right Turn on Red Signal		Equipment Failure
	FTYROW: From Stop Sign		Separation of Units
	FTYROW: From Yield Sign		Ran Off Road - Right
16	FTYROW: Making Left Turn		Ran Off Road - Straight
	FTYROW: From Driveway	1	Ran Off Road - Left
	FTYROW: From Parked Position	3	Lost Control
	FTYROW: To Pedestrian		Inattentive/Distracted By: Passenger
5	FTYROW: Other (explain in narrative)	1	Inattentive/Distracted By: Use of Phone or Other
	Traveling Wrong Way or on Wrong Side of Rd		Inattentive/Distracted By: Fallen Object
3	Driving Too Fast for Conditions		Inattentive/Distracted By: Fatigued/Asleep
	Exceeded Authorized Speed	1	Other: Vision Obstructed
3	Made Improper Turn		Oversized Load/ Oversized Vehicle
	Improper Lane Change		Cargo/Equipment Loss or Shift
13	Followed Too Close	11	Other: Other Improper Action
	Disregarded Railroad Signal	4	Unknown
	Disregarded Warning Sign	1	Other: No Improper Action
	Operating Vehicle in Reckless/Aggressive Manner		None Indicated

Selection Filter:

None

Analyst: OMV

Notes: Radius = 150'

Iowa Department of Transportation

Driver and Time Summary

Kenyon Rd and Ave C

Report Version 1.0 Aug 2006

Crash Time of Day Summary:

From / To	00:00 01:59	02:00 03:59	04:00 05:59	06:00 07:59	08:00 09:59	10:00 11:59	12:00 13:59	14:00 15:59	16:00 17:59	18:00 19:59	20:00 21:59	22:00 23:59	NR	Total	%
SUN	-	1	-	-	1	-	-	-	-	-	-	-	-	2	3
MON	-	1	-	-	2	1	3	5	2	-	1	-	-	15	22
TUE	-	-	-	-	1	-	1	1	4	-	-	1	-	8	12
WED	-	-	-	-	1	3	2	4	-	1	1	1	-	13	19
THU	-	-	-	1	-	2	1	5	4	1	-	-	-	14	21
FRI	-	-	-	2	-	1	-	2	3	-	1	-	-	9	13
SAT	-	-	-	1	-	2	2	1	-	-	-	-	-	6	9
Tot.		2		4	5	9	9	18	13	2	3	2		67	
%		3		6	7	13	13	27	19	3	4	3			100

Driver Age/Gender Summary:

Age	Male	Female	NR	Drivers	%
<14	-	-	-		
14	1	-	-	1	1
15	-	-	-		
16	2	3	-	5	3
17	2	2	-	4	3
18	5	4	-	9	6
19	9	6	-	15	10
20	1	1	-	2	1
21 to 24	12	10	-	22	15
25 to 29	6	6	-	12	8
30 to 34	3	5	-	8	6
35 to 39	6	3	-	9	6
40 to 44	2	5	-	7	5
45 to 49	7	4	-	11	8
50 to 54	4	8	-	12	8
55 to 59	3	5	-	8	6
60 to 64	2	-	-	2	1
65 to 69	2	3	-	5	3
70 to 74	1	1	-	2	1
75 to 79	3	3	-	6	4
80 to 84	-	-	-		
85 to 89	1	-	-	1	1
90 to 94	-	1	-	1	1
95 plus	-	-	-		
NR	-	-	1	1	1
Drivers	72	70	1	143	
%	50	49	1		100

Drug/Alcohol Summary:

	Total	%
Drug	1	1
Alcohol, Less than Statutory	2	3
Alcohol, Statutory	2	3
Drug/Alcohol, Less than Statutory		
Drug/Alcohol, Statutory		
Refused		
Under Influence of Alc/Drugs/Meds		
None Indicated	62	93
Total Crashes	67	100

Fixed Object Struck Summary:

	Vehs.	%
Bridge/Bridge rail/Overpass		
Underpass/Structure Support		
Culvert		
Ditch/Embankment		
Curb/Island/Raised Median		
Guardrail		
Concrete Barrier		
Tree		
Pole - Utility/Light/Etc		
Sign Post	1	1
Mailbox	1	1
Impact Attenuator		
Other Fixed Object		
None	141	99
Total Vehicles	143	100

Selection Filter:

None

Analyst: OMV

Notes: Radius = 150'

Intersection: Kenyon Rd & Ave C ID#: 106

Signal Evaluation	**MUTCD Issues**
1. Siemens Eagle M42 signal and Marc300 master controller. 2. Odetics Vantage Plus video detection 3. Protected/permissive left turn phasing on Kenyon Rd 4. Has a fiber optic distribution panel with jumpers to the signal controller. 5. There is a telephone connection within signal cabinet. 6. Does have battery back-up system.	1. Have circular indications over left turn lanes. Acceptable per previous MUTCD. Should be changed to flashing yellow arrow to comply with 2009 Edition. 2. Faded pedestrian signs need to be replaced. 3. When replacing street name signs, signs on mast arms shall have 12”, upper and lowercase lettering 4. Update clearance (yellow and red) and pedestrian intervals to current standards of practice
Misc. Comments	
1. The fiber optic cable indicates communication with adjacent signal likely Kenyon Rd & Ave E intersection.	

Budget Needs

Intersection	Item	Period for Modification		
		Short-Term (0-2 Years)	Mid-Term (2-5 Years)	Long-Term (5-15 Years)
Kenyon Rd & Ave C	Replace Street Name Signs		$2,600	
	Implement Flashing Yellow Arrows		$30,000	
	Annual Maintenance	$800	$1,200	$4,000
Total		$800	$33,800	$4,000

CLICK TO RETURN TO SIGNAL LOCATION MAP

Intersection: 2nd Ave S & A St ID#: 107

Intersection: 2nd Ave S & A St ID#: 107

Signal Evaluation	**MUTCD Issues**
1. Traffic Control Technologies LMD 8000 signal controller 2. Inductive Loop detection with Detector Systems amplifiers 3. Protected only left turn phasing on 2nd Ave S with optically limiting heads 4. No communication present 5. Does have battery back-up system.	1. Pedestrian signal heads should be replaced to include countdown timers. 2. When replacing street name signs, signs on mast arms shall have 12", upper and lowercase lettering 3. Update clearance (yellow and red) and pedestrian intervals to current standards of practice

Misc. Comments

1. Signal head housings, visors, and backplates are faded.
2. The optically limiting signal heads for the protected left turn movements are not necessary.
3. Due to overall traffic demand, signal could potentially be removed and intersection converted to two-way stop control.

Budget Needs

Intersection	Item	Period for Modification		
		Short-Term (0-2 Years)	Mid-Term (2-5 Years)	Long-Term (5-15 Years)
2nd Ave S & A St*	Convert Pedestrian Signals to include Countdown Timers	$6,400		
	Replace Street Name Signs		$2,600	
	Remove Traffic Signal		$15,000	
	Replace/Upgrade Controller and Cabinet		$20,000	
	Replace Traffic Signal		$200,000	
	Annual Maintenance	$800	$1,200	$4,000
Total		$7,200	$238,800	$4,000

* - If the 2nd Ave S & A St signal is removed, then the other improvement costs are not needed.

SIGNAL EQUIPMENT DATA

INTERSECTION: 2nd Ave S & A St

DATE: 6/25/14

POWER: Underground

ZONE: 1

ID: 107

CONTROLLER:
BRAND: Traffic Control Technologies
MODEL: LMD 8000

SOFTWARE VER:

DETECTORS:
LOOP: According to papers in cabinets, conduits have been placed
VIDEO: None

PUSHBUTTONS: Yes

POLE DATA

POLE NO.	POLE TYPE	POLE MATL.	TYPE OF BASE	ARM LENGTH / PEDSTL. HEIGHT		REMARKS
1	1	2	1	48		
2	1	2	2	25		
3	1	2	1	48		
4	1	2	2	25		
5	4	2	2	10		

POLE TYPE
1. SINGLE MAST ARM
2. TWIN MAST ARM
3. COMBINATION
4. PEDESTAL
5. UTILITY
6. OTHER

POLE MATL.
1. ALUMINUM
2. STEEL
3. WOOD
4. OTHER

TYPE OF BASE
1. PLATE
2. STEEL TRANSFORMER
3. ALUM. TRANSFORMER

AUXILIARY EQUIPMENT

VIDEO: None

PRE-EMPTION: Not Active

CONFLICT MONITOR: Traffic Control Technologies
LMN12E

BATTERY BACK-UP: 4 Batteries

DETECTOR AMP: Detector Systems 262cr and 204

COMMUNICATION:

SIGNAL TIMING DATA

INTERSECTION: 2nd Ave S & A St

CONTROLLER: Traffic Control Technologies

DATE: 6/25/14 - Existing Timings

Basic Timing Data Phase 2 and Phase 6 are East and Westbound

	Ph1 -	Ph2 -	Ph3 - Off	Ph4 - NB	Ph5 -	Ph6 -	Ph7 - Off	Ph8 - SB
Min Grn	8	10	0	8	5	10	0	8
Passage	3.5	7.5	0.0	4.0	3.5	6.0	0.0	4.0
Max 1	10	30	0	30	8	30	0	30
Max 2	30	30	0	30	30	30	0	30
Yellow	3.0	4.0	0.0	3.0	3.0	4.0	0.0	3.0
Red Clr	2.0	2.0	0.0	2.0	2.0	2.0	0.0	2.0
Walk	0	5	0	0	0	0	0	6
Ped Clear	0	12	0	0	0	0	0	23
Recall	Ext	Max		Ext	Ext	Max		Ext
Lock/Non								
Act/Non-Act								

Coordination Plan Data Free/Manually Programmed

Dial 1/Split 1 Cycle: Offset:

Phase	1	2	3	4	5	6	7	8
Time								
Mode								

Active Periods:

Dial 2/Split 1 Cycle: Offset:

Phase	1	2	3	4	5	6	7	8
Time								
Mode								

Active Periods:

Dial 3/Split 1 Cycle: Offset:

Phase	1	2	3	4	5	6	7	8
Time								
Mode								

Active Periods:

Phasing

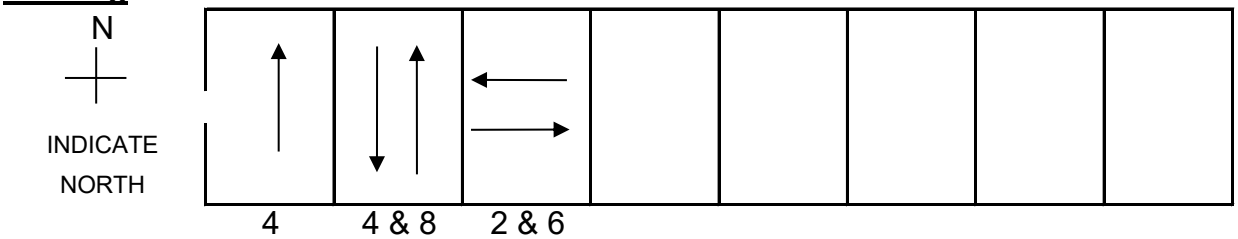

2nd Ave S + A St

SIGNAL LAYOUT:

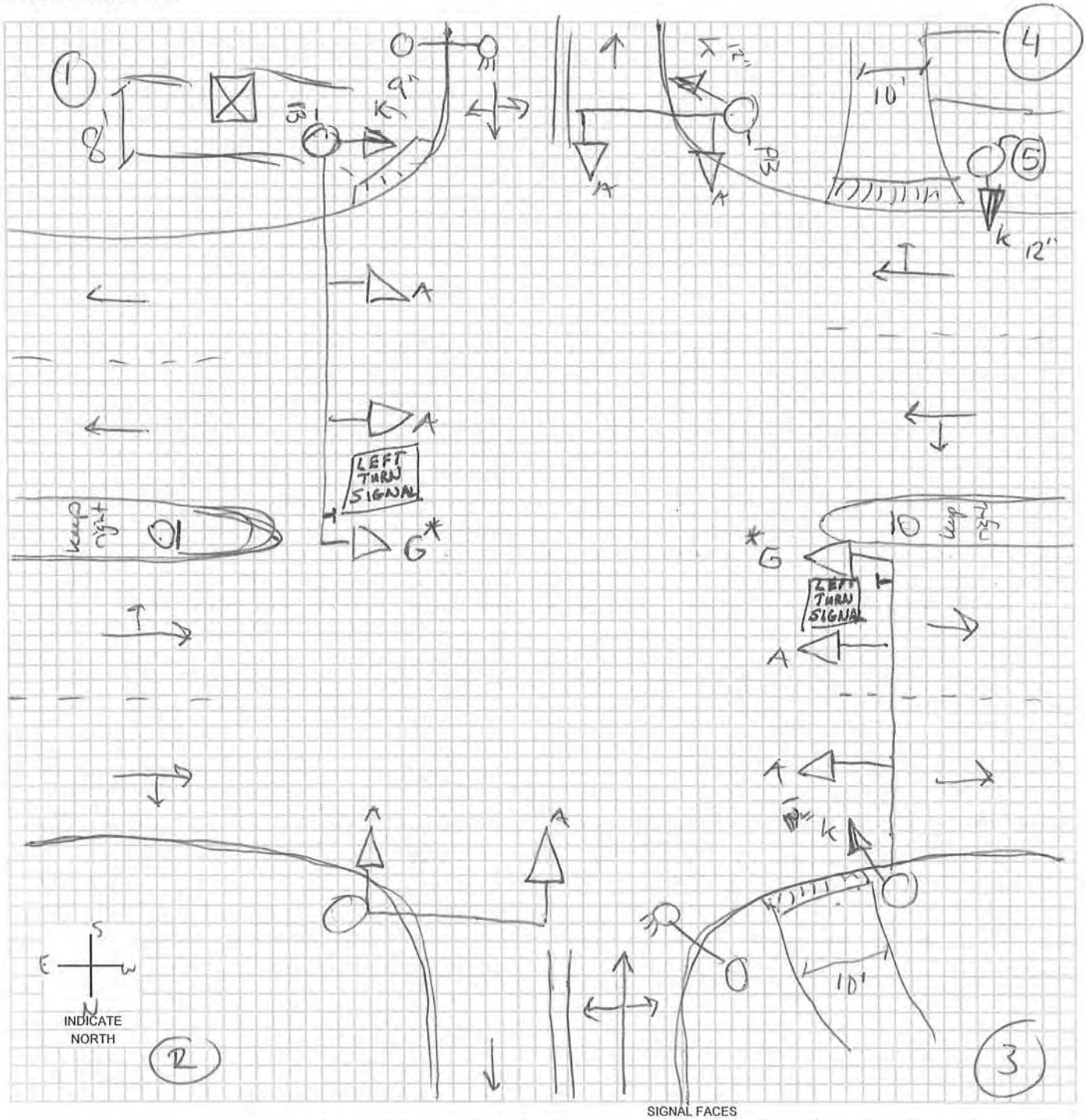

SIGNAL FACES

A	B	C	D	E	F	G	H	I	J	K	L	M	O
12 R	12 R	12 R	12 R	12 R	12 R	12 ◄R	12 ◄R	12 R	12 R	DW	W/DW	W DW	
12 Y	12 ◄Y / 12 Y	12 Y	12 Y	12 Y	12 ◄Y	12 ◄Y	12 ◄Y	12 Y	12 Y	W	CD		
12 G	12 ◄G / 12 G	12 G	12 G	12 ◄G	12 ◄G	12 ◄G	12 ◄FY	12 G	12 G			N: W CD DW	
		12 ◄G	12 ◄Y				12 ◄G	12 G►	12 Y►				
			12 ◄G						12 G►				

LEGEND

- (7) POLE & NUMBER
- SIGNAL INDICATION
- PEDESTRIAN SIGNAL INDICATION
- PB PUSHBUTTON
- 00-00-PD LOOP DECTETOR
- DISTANCE FROM STOP LINE - AREA OF DETECTION - PRESENCE PR; PULSE P; DELAY D; NO DELAY ND; EXTENSION E
- CONTROLLER
- (M) METER
- VIDEO DET CAMERA

-* OPTICALLY PROGRAMMABLE

Intersection: 2nd Ave S & A St ID #: 107

Crash Summary	**Trends**
1. Crash rate is below statewide average (0.50 crashes/MEV) 2. 4 of 12 crashes were injury crashes. The most severe crash was a minor injury crash. 3. No two crashes had the same major cause (1 crash indicated the surface condition was wet, ice, snow, or slush) 4. Three vehicles were reported as striking a fixed object: a pole (2) and a sign post (1) 5. 33% of the crashes occurred between 10 PM and 4 AM. 42 % occurred between 2 PM to 6 PM. 6. 35% of the drivers involved in the crashes were under the age of 30 and 20% were over the age of 60. 7. Three crashes identified being under the influence of alcohol or drugs.	1. Since 2010, the intersection experienced only 2 crashes (2011 & 2013). 2. 50% of the crashes were rear-end type collisions. 3. 50% of the crashes were westbound.
Mitigation Options / Potential Improvements	
1. This traffic signal may be unnecessary, as identified in the Traffic Signal Inventory. Removing the traffic signal may reduce the potential for rear-end crashes along 2nd Ave S.	
Funding Potential	
1. Unlikely to qualify for TSIP funding due to minimal crashes and low severity.	

Cost Opinion

Intersection	Item	Period for Modification		
		Short-Term (0-2 Year)	Mid-Term (2-5 Years)	Long-Term (5-15 Years)
2nd Ave S & A St	Remove Traffic Signal/Install Stop Control *		$15,000	
Total			$15,000	

*- Included in the Traffic Signal Inventory

Intersection Crash Summary

Location: 2nd Ave S & A St
City/County: Fort Dodge, Webster County
Time Period: 2004-May 2014 Crash Period = 10.5 years
Prepared by: OMV

NUMBER OF CRASHES

0	Fatal Crashes	0 fatalities	0 injuries
0	Major Injury Crashes		0 injuries
1	Minor Injury Crashes		1 injuries
3	Possible/Unknown Injury Crashes		2 injuries
8	Property Damage Only Crashes		
Totals: 12	Crashes	0 fatalities	3 injuries

CRASH RATES

Total Crash Rate =	12	/	23.95 MEV	=	0.50 Total Crashes/MEV
Fatal Crash Rate =	0	/	23.95 MEV	=	0.00 Fatal Crashes/MEV
Fatal/Injury Crash Rate =	4	/	23.95 MEV	=	0.17 F & I Crashes/MEV

CRASH FREQUENCY

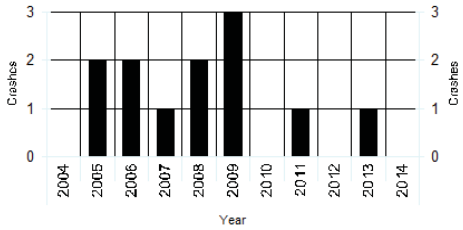

CRASH TYPE

1 Head-on	0 Sideswipe, Same Direction	
6 Rear-end Crash	0 Sideswipe, Opposite Direction	
1 Broadside/Right angle Crash	0 Parked	
0 Angle, Oncoming Left Turn	0 Other	
0 Backing	1 Unknown	

Non Vehicle Collision Type
0 Pedestrian
0 Bicycle
3 Fixed Object

TRAFFIC - AADT

North Approach =	1000
South Approach =	1500
East Approach =	5000
West Approach =	5000
Million Entering Vehicles (MEV) =	23.95

Notes:
2011 DOT Counts

A St and 2nd Ave S

2004 - 2014 Reportable Crashes

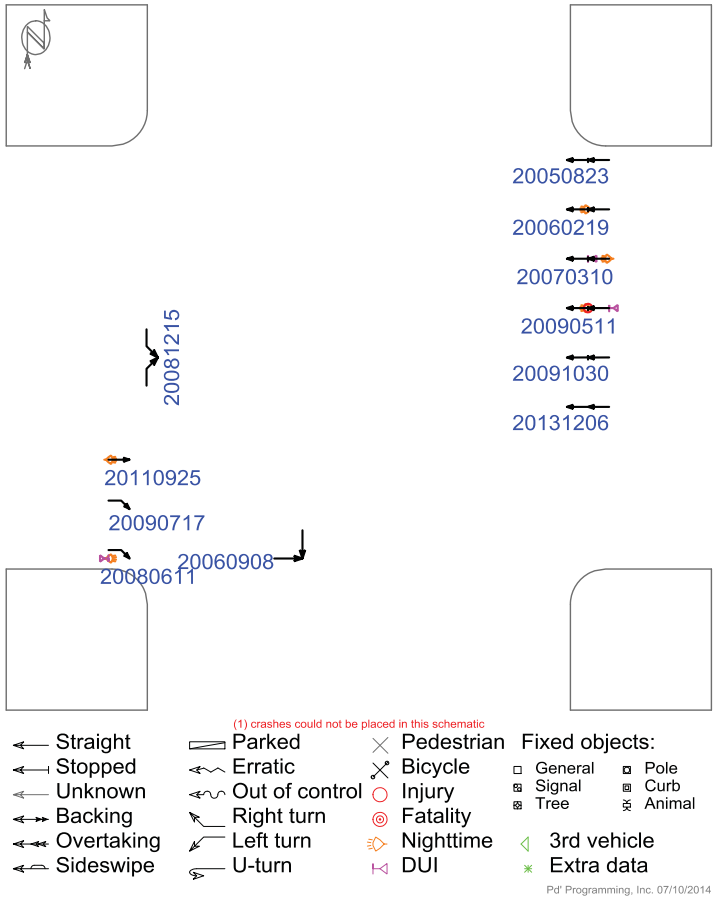

Iowa Department of Transportation

Major Cause Summary

A St and 2nd Ave S

Report Version 1.1 Jan 2005

Analysis Years: 2005 [2], 2006 [2], 2007 [1], 2008 [2], 2009 [3], 2011 [1], 2013 [1]

Crash Summary:

Fatal	-
Major Injury	-
Minor Injury	1
Possible/Unknown	3
PDO	8
Total Crashes	12

Injury Summary:

Fatal	-
Major Injury	-
Minor Injury	1
Possible	2
Unknown	1
Total Injuries	4

TOT Property Damage: $38,350

AVG Property Damage: $3,196

Surface Condition Summary:

Dry	11
Wet	-
Ice	1
Snow	-
Slush	-
Sand/Dirt/Oil/Gravel	-
Water	-
Other	-
Unknown	-
Not Reported	-
Total Crashes	12

Major Cause Summary:

	Animal		Improper Backing
1	Ran Traffic Signal		Illegally Parked/Unattended
	Ran Stop Sign		Swerving/Evasive Action
1	Crossed Centerline		Over-Correcting/Over-Steering
	FTYROW: At Uncontrolled Intersection		Downhill Runaway
	FTYROW: Making Right Turn on Red Signal		Equipment Failure
	FTYROW: From Stop Sign		Separation of Units
	FTYROW: From Yield Sign	1	Ran Off Road - Right
	FTYROW: Making Left Turn		Ran Off Road - Straight
	FTYROW: From Driveway		Ran Off Road - Left
	FTYROW: From Parked Position		Lost Control
	FTYROW: To Pedestrian	1	Inattentive/Distracted By: Passenger
1	FTYROW: Other (explain in narrative)	1	Inattentive/Distracted By: Use of Phone or Other
1	Traveling Wrong Way or on Wrong Side of Rd		Inattentive/Distracted By: Fallen Object
	Driving Too Fast for Conditions		Inattentive/Distracted By: Fatigued/Asleep
1	Exceeded Authorized Speed		Other: Vision Obstructed
	Made Improper Turn		Oversized Load/ Oversized Vehicle
	Improper Lane Change		Cargo/Equipment Loss or Shift
1	Followed Too Close	1	Other: Other Improper Action
	Disregarded Railroad Signal	1	Unknown
	Disregarded Warning Sign	1	Other: No Improper Action
	Operating Vehicle in Reckless/Aggressive Manner		None Indicated

Selection Filter:

None

Analyst: OMV

Notes: Radius = 150'

Iowa Department of Transportation

Driver and Time Summary

A St and 2nd Ave S

Report Version 1.0 Aug 2006

Crash Time of Day Summary:

From / To	00:00 01:59	02:00 03:59	04:00 05:59	06:00 07:59	08:00 09:59	10:00 11:59	12:00 13:59	14:00 15:59	16:00 17:59	18:00 19:59	20:00 21:59	22:00 23:59	NR	Total	%
SUN	1	-	-	1	-	-	-	-	-	-	-	-	-	2	17
MON	-	-	-	-	-	-	-	-	1	-	-	1	-	2	17
TUE	-	-	-	-	-	-	-	2	-	-	-	-	-	2	17
WED	1	-	-	-	-	-	-	-	-	-	-	-	-	1	8
THU	-	-	-	-	-	-	-	-	-	-	-	-	-		
FRI	-	-	-	-	1	1	-	1	1	-	-	-	-	4	33
SAT	-	1	-	-	-	-	-	-	-	-	-	-	-	1	8
Tot.	2	1		1	1	1		3	2			1		12	
%	17	8		8	8	8		25	17			8			100

Driver Age/Gender Summary:

Age	Male	Female	NR	Drivers	%
<14	-	-	-		
14	-	-	-		
15	-	1	-	1	5
16	1	-	-	1	5
17	-	-	-		
18	-	-	-		
19	-	-	-		
20	1	-	-	1	5
21 to 24	-	2	-	2	10
25 to 29	-	2	-	2	10
30 to 34	-	1	-	1	5
35 to 39	-	-	-		
40 to 44	-	-	-		
45 to 49	2	1	-	3	14
50 to 54	1	1	-	2	10
55 to 59	2	-	-	2	10
60 to 64	1	-	-	1	5
65 to 69	-	-	-		
70 to 74	1	-	-	1	5
75 to 79	-	-	-		
80 to 84	1	-	-	1	5
85 to 89	-	-	-		
90 to 94	-	1	-	1	5
95 plus	-	-	-		
NR	-	-	2	2	10
Drivers	10	9	2	21	
%	48	43	10		100

Drug/Alcohol Summary:

	Total	%
Drug		
Alcohol, Less than Statutory		
Alcohol, Statutory	2	17
Drug/Alcohol, Less than Statutory		
Drug/Alcohol, Statutory		
Refused	1	8
Under Influence of Alc/Drugs/Meds		
None Indicated	9	75
Total Crashes	12	100

Fixed Object Struck Summary:

	Vehs.	%
Bridge/Bridge rail/Overpass		
Underpass/Structure Support		
Culvert		
Ditch/Embankment		
Curb/Island/Raised Median		
Guardrail		
Concrete Barrier		
Tree		
Pole - Utility/Light/Etc	2	10
Sign Post	1	5
Mailbox		
Impact Attenuator		
Other Fixed Object		
None	18	86
Total Vehicles	21	100

Selection Filter:

None

Analyst: OMV

Notes: Radius = 150'

Intersection: 2nd Ave S & A St ID#: 107

Lane Width	**Turn Lanes**
Approaching N/S: 12 ft E/W: 12 ft	Left turn lanes on E/W approaches No right turn lanes
Sidewalk/ADA Ramps	**Lighting**
No sidewalks exist in NE corner. A trail was constructed along the west side of A St and south side of 2nd Ave S (intersection to the east) with detectable warning panels at the intersection. Placement of panels seems appropriate. Pushbuttons were installed on poles near the trails. There still is a gap between the trail and poles. Street pavement at crossings is in poor condition.	There are two separate wood poles located near the intersection that provide lighting along A St. A St to the south has corridor lighting. Housing indicated 250 watt high pressure sodium fixtures.
Parking	**Access/Driveways**
No parking exists along both streets.	No driveways exist along 2nd Ave S. There is a T-intersection located 100 ft north of intersection along A St (Country Club Dr).
Miscellaneous	
1. Install additional sidewalk/trail to the poles with pushbuttons if signal is not removed.	

Cost Opinion

Intersection	Item	Period for Modification		
		Short-Term	Mid-Term	Long-Term
		(0-2 Years)	(2-5 Years)	(5-15 Years)
2nd Ave S & A St	Construct Sidewalks to Pushbutton Locations	$500		
Total		$500		

CLICK TO RETURN TO SIGNAL LOCATION MAP

2nd Ave S & S 3rd St ID#: 208

Intersection: 2nd Ave S & S 3rd St ID#: 208

Signal Evaluation	MUTCD Issues
1. Eagle Signal ET460 signal controller 2. Inductive Loop detection with Detector Systems amplifiers 3. Permissive only left turn phasing 4. No communication present 5. Does not have battery back-up system	1. When replacing street name signs, signs on mast arms shall have 12", upper and lowercase lettering 2. Update clearance intervals (yellow and red) to current standards of practice

Misc. Comments

1. The traffic signal controller and cabinet should be updated to a solid-state controller
2. No signal head backplates exists
3. South approach has one-way traffic away from intersection
4. Trail and sidewalk was recently constructed at the intersection. However, no pedestrian signal heads or pushbuttons were installed.
5. Due to overall traffic demand, signal could potentially be removed and intersection converted to stop control. Review travel patterns once the Cross-Town Connector project is complete.
6. Cross-Town Connector project will modify pavement markings to include left turn only lanes E/W. If signal remains in place, signal heads over these lanes should be replaced to arrow only heads with flashing yellow arrow indications for permissive movements.

Budget Needs

Intersection	Item	Period for Modification		
		Short-Term (0-2 Years)	Mid-Term (2-5 Years)	Long-Term (5-15 Years)
2nd Ave S & S 3rd St	Install Pedestrian Signals and Pushbuttons	$10,400		
	Replace Damaged Poles	$20,000		
	Install Backplates on Signal Heads (backplates do not exist for current signal heads)	-		
	Replace Street Name Signs		$2,600	
	Install Battery Back-up System		$8,000	
	Replace/Upgrade Controller and Cabinet		$20,000	
	Implement Flashing Yellow Arrows		$30,000	
	Annual Maintenance	$800	$1,200	$4,000
Total		$31,200	$61,800	$4,000

SIGNAL EQUIPMENT DATA

INTERSECTION: 2nd Ave S & S 3rd St

DATE: 6/24/14

POWER: Overhead

ZONE: 2

ID: 208

CONTROLLER:
BRAND: Eagle
MODEL: ET460

SOFTWARE VER: N/A

DETECTORS:
LOOP: Detector Systems

VIDEO: None

PUSHBUTTONS: None

POLE DATA

POLE NO.	POLE TYPE	POLE MATL.	TYPE OF BASE	ARM LENGTH / PEDSTL. HEIGHT		REMARKS
1	1	2	2	20		Slight damage
2	1	2	2	22		Damage to base
3	1	2	2	20		

POLE TYPE
1. SINGLE MAST ARM
2. TWIN MAST ARM
3. COMBINATION
4. PEDESTAL
5. UTILITY
6. OTHER

POLE MATL.
1. ALUMINUM
2. STEEL
3. WOOD
4. OTHER

TYPE OF BASE
1. PLATE
2. STEEL TRANSFORMER
3. ALUM. TRANSFORMER

AUXILIARY EQUIPMENT

VIDEO: None

PRE-EMPTION: Opticom

CONFLICT MONITOR: Eagle LT 176

BATTERY BACK-UP: None

DETECTOR AMP: Detectory Systems Model 913-SS
and 8130A
COMMUNICATION: None

SIGNAL TIMING DATA

INTERSECTION: 2nd Ave S & S 3rd St

CONTROLLER: Eagle ET460

DATE: 6/24/14 - Existing Timings

Basic Timing Data

	Ph1 - A	Ph2 - B	Ph3 -	Ph4 -	Ph5 -	Ph6 -	Ph7 -	Ph8 -
Min Grn	15.5	6						
Passage	3.0	3.0						
Max 1	31	28						
Max 2								
Yellow	3.0	3.0						
Red Clr	1.0	1.5						
Walk								
Ped Clear								
Recall	X							
Lock/Non								
Act/Non-Act								

Coordination Plan Data

Dial 1/Split 1 Cycle: Offset:

Phase	1	2	3	4	5	6	7	8
Time								
Mode								

Active Periods:

Dial 2/Split 1 Cycle: Offset:

Phase	1	2	3	4	5	6	7	8
Time								
Mode								

Active Periods:

Dial 3/Split 1 Cycle: Offset:

Phase	1	2	3	4	5	6	7	8
Time								
Mode								

Active Periods:

Phasing

N

INDICATE NORTH

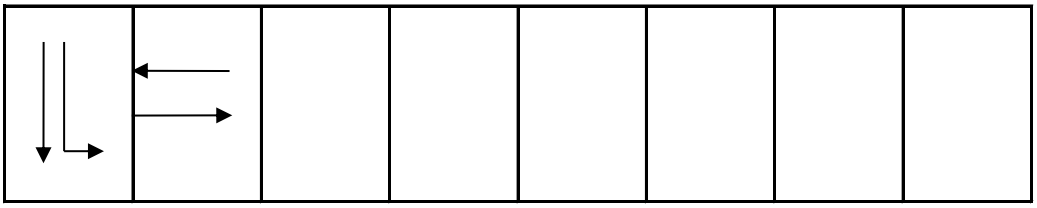

City of Fort Dodge

S 3rd St & 2nd Ave S

SIGNAL LAYOUT:

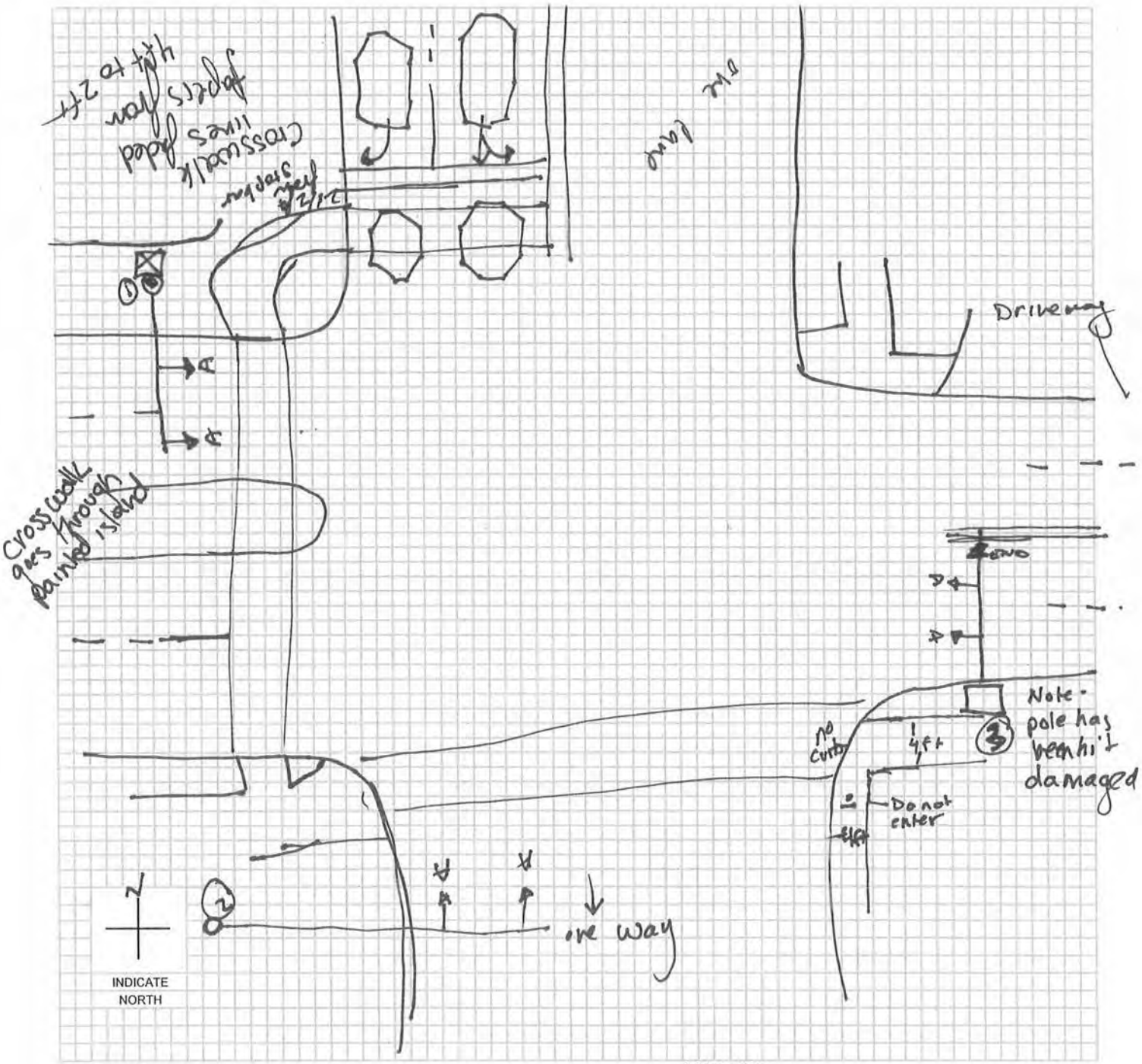

SIGNAL FACES

	A	B	C	D	E	F	G	H	I	J	K	L	M	O
	12 R	12 R	12 R	12 R	12 R	12 R	12 ◄R	12 ◄R	12 R	12 R	DW	W/DW	W DW	
	12 Y	12 ◄Y	12 Y	12 Y	12 Y	12 ◄Y	12 ◄Y	12 ◄Y	12 Y	12 Y	W	CD		
	12 G	12 ◄G	12 G	12 G	12 ◄G	12 ◄G	12 ◄G	12 ◄FY	12 G	12 G			N	
		12 G	12 ◄G	12 ◄Y				12 ◄G	12 G►	12 Y►			W CD DW	
				12 ◄G						12 G►				

LEGEND

- (7) POLE & NUMBER
- SIGNAL INDICATION
- PEDESTRIAN SIGNAL INDICATION
- PB PUSHBUTTON
- 00-00-PD LOOP DECTETOR
- DISTANCE FROM STOP LINE - AREA OF DETECTION - PRESENCE PR; PULSE P; DELAY D; NO DELAY ND; EXTENSION E
- CONTROLLER
- (M) METER
- VIDEO DET CAMERA

-* OPTICALLY PROGRAMMABLE

Intersection: 2nd Ave S & S 3rd St ID #: 208

Crash Summary	**Trends**
1. Crash rate is below statewide average (0.39 crashes/MEV) 2. 8 of 15 crashes were injury crashes. The most severe crash was a minor injury crash. 3. Driving too fast for conditions (20%) was reported most frequently as the major cause (7 crashes indicated the surface condition was wet, ice, snow, or slush) 4. Two vehicles were reported striking a fixed object: a pole (2) 5. 47% of the crashes occurred between 2 PM to 6 PM 6. 33% of the drivers involved in the crashes were under the age of 30.	1. Prior to 2011, the intersection experienced 2 or 3 crashes per year. Since 2011, the intersection experienced only 1 crash (2013). 2. 40% of the crashes were rear-end type collisions. 3. Only 3 crashes involved a southbound vehicle.

Mitigation Options / Potential Improvements

1. Implementing left turn lanes along 2nd Ave S may reduce the potential for rear-end crashes. These left turn lanes are being implemented as a part of the Cross-Town Connector - Phase 2 project (2015).
2. This traffic signal may be unnecessary, as identified in the Traffic Signal Inventory. Removing the traffic signal may reduce the potential for rear-end crashes along 2nd Ave S.

Funding Potential

1. Unlikely to qualify for TSIP funding due to minimal crashes and low severity.

Cost Opinion

Intersection	Item	Period for Modification		
		Short-Term (0-2 Year)	Mid-Term (2-5 Years)	Long-Term (5-15 Years)
2nd Ave S & S 3rd St	Remove Traffic Signal		$15,000	
Total			$15,000	

Intersection Crash Summary

Location: 2nd Ave S & S 3rd St
City/County: Fort Dodge, Webster County
Time Period: 2004-May 2014 Crash Period = 10.5 years
Prepared by: OMV

NUMBER OF CRASHES

0	Fatal Crashes	0 fatalities	0 injuries
0	Major Injury Crashes		0 injuries
1	Minor Injury Crashes		1 injuries
7	Possible/Unknown Injury Crashes		8 injuries
7	Property Damage Only Crashes		
Totals: 15	Crashes	0 fatalities	9 injuries

CRASH RATES

Total Crash Rate =	15	/	38.73 MEV	=	0.39 Total Crashes/MEV
Fatal Crash Rate =	0	/	38.73 MEV	=	0.00 Fatal Crashes/MEV
Fatal/Injury Crash Rate =	8	/	38.73 MEV	=	0.21 F & I Crashes/MEV

CRASH FREQUENCY

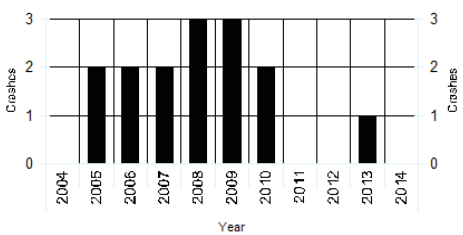

CRASH TYPE

0 Head-on	2 Sideswipe, Same Direction	Non Vehicle Collision Type
6 Rear-end Crash	0 Sideswipe, Opposite Direction	0 Pedestrian
3 Broadside/Right angle Crash	0 Parked	0 Bicycle
2 Angle, Oncoming Left Turn	0 Other	2 Fixed Object
0 Backing	0 Unknown	

TRAFFIC - AADT

North Approach =	5300
South Approach =	110
East Approach =	8000
West Approach =	6800
Million Entering Vehicles (MEV) =	38.73

Notes:
IDOT 2007 AADT

S 3rd St and 2nd Ave S

2004 - 2014 Reportable Crashes

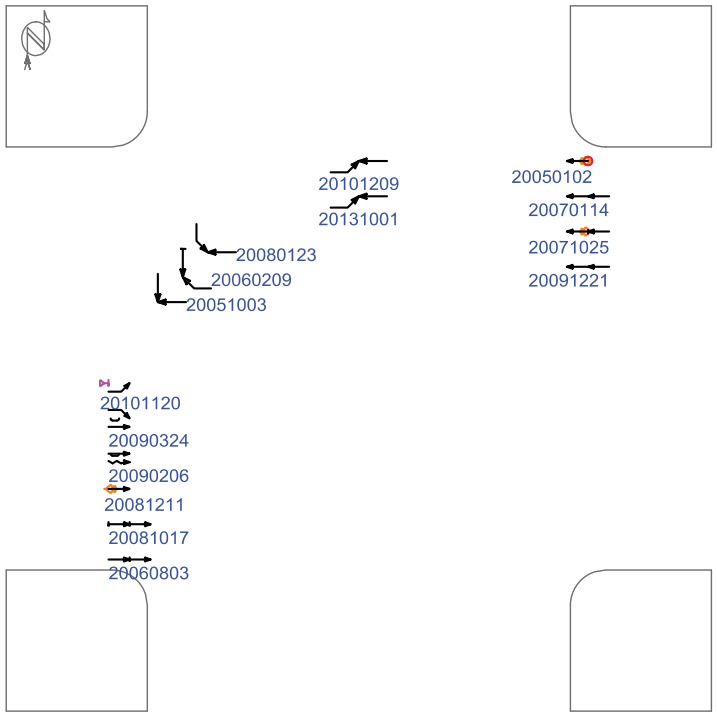

(0) crashes could not be placed in this schematic

Straight
Stopped
Unknown
Backing
Overtaking
Sideswipe
Parked
Erratic
Out of control
Right turn
Left turn
U-turn
Pedestrian
Bicycle
Injury
Fatality
Nighttime
DUI
Fixed objects:
General
Signal
Tree
Pole
Curb
Animal
3rd vehicle
Extra data

Pd' Programming, Inc. 07/10/2014

Iowa Department of Transportation

Major Cause Summary

S 3rd St and 2nd Ave S

Report Version 1.1 Jan 2005

Analysis Years: 2005 [2], 2006 [2], 2007 [2], 2008 [3], 2009 [3], 2010 [2], 2013 [1]

Crash Summary:

Fatal	-
Major Injury	-
Minor Injury	1
Possible/Unknown	7
PDO	7
Total Crashes	15

Injury Summary:

Fatal	-
Major Injury	-
Minor Injury	1
Possible	8
Unknown	-
Total Injuries	9

TOT Property Damage: $131,700

AVG Property Damage: $8,780

Surface Condition Summary:

Dry	8
Wet	3
Ice	1
Snow	1
Slush	2
Sand/Dirt/Oil/Gravel	-
Water	-
Other	-
Unknown	-
Not Reported	-
Total Crashes	15

Major Cause Summary:

	Animal		Improper Backing
1	Ran Traffic Signal		Illegally Parked/Unattended
	Ran Stop Sign	1	Swerving/Evasive Action
	Crossed Centerline		Over-Correcting/Over-Steering
	FTYROW: At Uncontrolled Intersection		Downhill Runaway
	FTYROW: Making Right Turn on Red Signal		Equipment Failure
	FTYROW: From Stop Sign		Separation of Units
	FTYROW: From Yield Sign	1	Ran Off Road - Right
	FTYROW: Making Left Turn		Ran Off Road - Straight
	FTYROW: From Driveway		Ran Off Road - Left
	FTYROW: From Parked Position		Lost Control
	FTYROW: To Pedestrian		Inattentive/Distracted By: Passenger
1	FTYROW: Other (explain in narrative)		Inattentive/Distracted By: Use of Phone or Other
	Traveling Wrong Way or on Wrong Side of Rd	1	Inattentive/Distracted By: Fallen Object
3	Driving Too Fast for Conditions		Inattentive/Distracted By: Fatigued/Asleep
	Exceeded Authorized Speed		Other: Vision Obstructed
1	Made Improper Turn		Oversized Load/ Oversized Vehicle
	Improper Lane Change		Cargo/Equipment Loss or Shift
	Followed Too Close	3	Other: Other Improper Action
	Disregarded Railroad Signal	2	Unknown
	Disregarded Warning Sign	1	Other: No Improper Action
	Operating Vehicle in Reckless/Aggressive Manner		None Indicated

Selection Filter:

None

Analyst: OMV

Notes: Radius = 150'

Iowa Department of Transportation

Driver and Time Summary

S 3rd St and 2nd Ave S

Report Version 1.0 Aug 2006

Crash Time of Day Summary:

From / To	00:00 01:59	02:00 03:59	04:00 05:59	06:00 07:59	08:00 09:59	10:00 11:59	12:00 13:59	14:00 15:59	16:00 17:59	18:00 19:59	20:00 21:59	22:00 23:59	NR	Total	%
SUN	-	-	-	-	-	1	-	-	-	-	1	-	-	2	13
MON	-	-	-	-	-	1	-	1	-	-	-	-	-	2	13
TUE	-	-	-	-	-	-	-	-	2	-	-	-	-	2	13
WED	-	-	-	-	-	-	-	1	-	-	-	-	-	1	7
THU	-	-	-	-	-	-	-	2	1	1	1	-	-	5	33
FRI	-	-	-	1	1	-	-	-	-	-	-	-	-	2	13
SAT	-	-	-	-	-	1	-	-	-	-	-	-	-	1	7
Tot.				1	1	3		4	3	1	2			15	
%				7	7	20		27	20	7	13				100

Driver Age/Gender Summary:

Age	Male	Female	NR	Drivers	%
<14	-	-	-		
14	-	-	-		
15	1	-	-	1	3
16	1	-	-	1	3
17	-	-	-		
18	-	-	-		
19	-	-	-		
20	1	-	-	1	3
21 to 24	1	-	-	1	3
25 to 29	4	2	-	6	21
30 to 34	-	4	-	4	14
35 to 39	1	1	-	2	7
40 to 44	-	-	-		
45 to 49	3	1	-	4	14
50 to 54	1	2	-	3	10
55 to 59	-	1	-	1	3
60 to 64	-	2	-	2	7
65 to 69	-	1	-	1	3
70 to 74	1	-	-	1	3
75 to 79	1	-	-	1	3
80 to 84	-	-	-		
85 to 89	-	-	-		
90 to 94	-	-	-		
95 plus	-	-	-		
NR	-	-	-		
Drivers	15	14	0	29	
%	52	48	0		100

Drug/Alcohol Summary:

	Total	%
Drug		
Alcohol, Less than Statutory	1	7
Alcohol, Statutory		
Drug/Alcohol, Less than Statutory		
Drug/Alcohol, Statutory		
Refused		
Under Influence of Alc/Drugs/Meds		
None Indicated	14	93
Total Crashes	15	100

Fixed Object Struck Summary:

	Vehs.	%
Bridge/Bridge rail/Overpass		
Underpass/Structure Support		
Culvert		
Ditch/Embankment		
Curb/Island/Raised Median		
Guardrail		
Concrete Barrier		
Tree		
Pole - Utility/Light/Etc	2	7
Sign Post		
Mailbox		
Impact Attenuator		
Other Fixed Object		
None	27	93
Total Vehicles	29	100

Selection Filter:

None

Analyst: OMV

Notes: Radius = 150'

Intersection: 2nd Ave S & S 3rd St ID#: 208

Lane Width	**Turn Lanes**
Approaching (S approach is southbound only) N: 12 ft E/W: 12 ft	No left turn lanes Right turn lane on N approach
Sidewalk/ADA Ramps	**Lighting**
Sidewalks exist in every corner. Sidewalk widths vary from 4 ft to 8 ft. The new sidewalk/trail constructed on the west side of the intersection has ramps with detectable warning panels. The sidewalks on the east side do not have ramps.	There is no lighting immediately at the intersection. The east, north, and west approaches have corridor street lighting with the nearest light pole being 80 ft from the intersection. Housing indicated 250 watt high pressure sodium fixtures.
Parking	**Access/Driveways**
No parking exists along both streets.	No driveways exist along 2nd Ave S west of the intersection. There are driveways on both sides of 2nd Ave S within 40 ft east of the intersection. A driveway exists 100 ft north of the intersection along S 3rd St.
Miscellaneous	
1. The south approach lines up with the northbound movement away from the intersection on the north approach. There is an approximate 20 ft offset for the southbound through movement within the intersection. With no opposing traffic and the minimal traffic movement, this offset does not create issues.	

Cost Opinion

Intersection	Item	Period for Modification		
		Short-Term (0-2 Years)	Mid-Term (2-5 Years)	Long-Term (5-15 Years)
2nd Ave S & S 3rd St	Construct Sidewalk Ramps - East Side	$1,800		
Total		$1,800		

CLICK TO RETURN TO SIGNAL LOCATION MAP

Intersection: 1st Ave S & S 7th St ID#: 209

Signal Evaluation	MUTCD Issues
1. PEEK ATC-1000 signal controller (installed 2014) 2. PEEK VideoTrakIQ video detection 3. Protected/permissive left turn phasing along 1st Ave S 4. Single Mode FO communication present to S 8th St with conduit extending to 2nd Ave S & S 5th St 5. Does have battery back-up system	1. None

Misc. Comments
1. Traffic signal was reconstructed in 2014 as a part of the Cross-Town Connector Phase 2 project.

Budget Needs

Intersection	Item	Period for Modification		
		Short-Term (0-2 Years)	Mid-Term (2-5 Years)	Long-Term (5-15 Years)
1st Ave S & S 7th St	New Signal in 2014			
	Annual Maintenance	$800	$1,200	$4,000
Total		$800	$1,200	$4,000

Intersection: 1st Ave S & S 7th St ID#: 209

Crash Summary	**Trends**
1. Analysis not completed due to reconstruction in 2014. Prior to reconstruction 1st Ave S was two lane, one-way westbound with parking on both sides. After reconstruction, 1st Ave S was three lanes, two-way traffic with parking.	1.
Mitigation Options / Potential Improvements	
1.	
Funding Potential	
1.	

Cost Opinion

Intersection	Item	Period for Modification		
		Short-Term (0-2 Year)	Mid-Term (2-5 Years)	Long-Term (5-15 Years)
1st Ave S & S 7th St	None			
Total				

Intersection: 1st Ave S & S 7th St ID#: 209

Lane Width	**Turn Lanes**
Approaching N/S: 12 ft E/W: 12 ft	Left turn lanes on E/W approaches No right turn lanes
Sidewalk/ADA Ramps	**Lighting**
Sidewalks and ramps constructed in 2014 per requirements	Corridor lighting is provided along 1st Ave S. All mast arm signal poles are combination signal and lighting poles. Fixtures are LED.
Parking	**Access/Driveways**
Parking is restricted at the intersection, but is along both streets.	No driveways exist within 100 ft of the intersection.
Miscellaneous	
1. Intersection was reconstructed in 2014 as a part of the Cross-Town Connector Phase 2 project.	

Cost Opinion

Intersection	Item	Period for Modification		
		Short-Term (0-2 Years)	Mid-Term (2-5 Years)	Long-Term (5-15 Years)
1st Ave S & S 7th St	None			
Total				

CLICK TO RETURN TO SIGNAL LOCATION MAP

Intersection: 1st Ave S & S 8th St ID#: 210

Signal Evaluation	MUTCD Issues
1. PEEK ATC-1000 signal controller (installed 2014) 2. PEEK VideoTrakIQ video detection 3. Protected/permissive left turn phasing along 1st Ave S 4. Single Mode FO communication present to S 7th St and S 9th St 5. Does have battery back-up system	1. None

Misc. Comments
1. Traffic signal was reconstructed in 2014 as a part of the Cross-Town Connector Phase 2 project.

Budget Needs

Intersection	Item	Period for Modification		
		Short-Term (0-2 Years)	Mid-Term (2-5 Years)	Long-Term (5-15 Years)
1st Ave S & S 8th St	New Signal in 2014			
	Annual Maintenance	$800	$1,200	$4,000
Total		$800	$1,200	$4,000

Intersection: 1st Ave S & S 8th St ID#: 210

Crash Summary	**Trends**
1. Analysis not completed due to reconstruction in 2014. Prior to reconstruction 1st Ave S was two lane, one-way westbound with parking on both sides. After reconstruction, 1st Ave S was three lanes, two-way traffic with parking.	1.
Mitigation Options / Potential Improvements	
1.	
Funding Potential	
1.	

Cost Opinion

Intersection	Item	Period for Modification		
		Short-Term (0-2 Year)	Mid-Term (2-5 Years)	Long-Term (5-15 Years)
1st Ave S & S 8th St	None			
Total				

Intersection: 1st Ave S & S 8th St ID#: 210

Lane Width	**Turn Lanes**
Approaching N/S: 12 ft E/W: 12 ft	Left turn lanes on E/W approaches No right turn lanes
Sidewalk/ADA Ramps	**Lighting**
Sidewalks and ramps constructed in 2014 per requirements	Corridor lighting is provided along 1st Ave S. All mast arm signal poles are combination signal and lighting poles. Fixtures are LED.
Parking	**Access/Driveways**
Parking is restricted at the intersection, but is along both streets.	No driveways exist within 100 ft of the intersection.
Miscellaneous	
1. Intersection was reconstructed in 2014 as a part of the Cross-Town Connector Phase 2 project.	

Cost Opinion

Intersection	Item	Period for Modification		
		Short-Term (0-2 Years)	Mid-Term (2-5 Years)	Long-Term (5-15 Years)
1st Ave S & S 8th St	None			
Total				

CLICK TO RETURN TO SIGNAL LOCATION MAP

Intersection: 1st Ave S & S 9th St ID#: 211

Signal Evaluation	MUTCD Issues
1. PEEK ATC-1000 signal controller (installed 2014) 2. PEEK VideoTrakIQ video detection 3. Protected/permissive left turn phasing along 1st Ave S 4. Single Mode FO communication present to S 8th St with conduit extending to S 13th St 5. Does have battery back-up system	1. None

Misc. Comments
1. Traffic signal was reconstructed in 2014/15 as a part of the Cross-Town Connector Phase 2 project.

Budget Needs

Intersection	Item	Period for Modification		
		Short-Term (0-2 Years)	Mid-Term (2-5 Years)	Long-Term (5-15 Years)
1st Ave S & S 9th St	New Signal in 2014			
	Annual Maintenance	$800	$1,200	$4,000
Total		$800	$1,200	$4,000

Intersection: 1st Ave S & S 9th St ID#: 211

Crash Summary	**Trends**
1. Analysis not completed due to reconstruction in 2014/15. Prior to reconstruction 1st Ave S was two lane, one-way westbound with parking on both sides. After reconstruction, 1st Ave S was three lanes, two-way traffic with parking.	1.
Mitigation Options / Potential Improvements	
1.	
Funding Potential	
1.	

Cost Opinion

Intersection	Item	Period for Modification		
		Short-Term (0-2 Year)	Mid-Term (2-5 Years)	Long-Term (5-15 Years)
1st Ave S & S 9th St	None			
Total				

Intersection: 1st Ave S & S 9th St ID#: 211

Lane Width	**Turn Lanes**
Approaching N/S: 12 ft E/W: 12 ft	Left turn lanes on E/W approaches No right turn lanes
Sidewalk/ADA Ramps	**Lighting**
Sidewalks and ramps constructed in 2015 per requirements	Corridor lighting is provided along 1st Ave S. All mast arm signal poles are combination signal and lighting poles. Fixtures are LED.
Parking	**Access/Driveways**
Parking is restricted at the intersection, but is along both streets.	No driveways exist within 80 ft of the intersection when construction is complete.
Miscellaneous	
1. Intersection was reconstructed in 2014/15 as a part of the Cross-Town Connector Phase 2 project.	

Cost Opinion

Intersection	Item	Period for Modification		
		Short-Term (0-2 Years)	Mid-Term (2-5 Years)	Long-Term (5-15 Years)
1st Ave S & S 9th St	None			
Total				

CLICK TO RETURN TO SIGNAL LOCATION MAP

Central Ave & 12th St ID#: 212

Intersection: Central Ave & 12th St ID#: 212

Signal Evaluation	MUTCD Issues
1. Traffic Control Technologies LSM 6P signal controller/conflict monitor 2. No detection exists - signal runs pretimed 3. Permissive only left turn phasing 4. Does not have communication equipment 5. Does not have battery back-up system	1. Have circular indications over left turn lanes. Acceptable per previous MUTCD. Should be changed to flashing yellow arrow to comply with 2009 Edition. 2. Pedestrian signal heads should be replaced to include countdown timers. 3. The lane control sign in advance of the intersection (southbound) should include "ONLY" under the left turn arrow and the arrows are not consistent with standard design 4. When replacing street name signs, signs on mast arms shall have 12", upper and lowercase lettering 5. Update clearance (yellow and red) and pedestrian intervals to current standards of practice

Misc. Comments

1. Every signal pole is showing signs of rust
2. Install Left Only (R3-5L) signs over the left turn lanes (southbound and westbound)
3. Sidewalks exist on every corner. Could install pushbuttons and time signal for vehicles. However, with the location being in downtown, likely better to time for pedestrians.
4. Signal should be replaced because of the signal poles are showing signs of rust and the signal cabinet/controller are quite old. Replacing traffic signal will address these issues.

Budget Needs

Intersection	Item	Period for Modification		
		Short-Term (0-2 Years)	Mid-Term (2-5 Years)	Long-Term (5-15 Years)
Central Ave & 12th St	Reconstruct Traffic Signal		$200,000	
	Annual Maintenance	$800	$1,200	$4,000
Total		$800	$201,200	$4,000

SIGNAL EQUIPMENT DATA

INTERSECTION: Central Ave & 12th St

DATE: 6/25/14

POWER:

ZONE: 2

ID: 212

CONTROLLER:
BRAND:
MODEL:

SOFTWARE VER:

DETECTORS:
LOOP:

VIDEO: None

PUSHBUTTONS: Yes

POLE DATA

POLE NO.	POLE TYPE	POLE MATL.	TYPE OF BASE	ARM LENGTH / PEDSTL. HEIGHT		REMARKS
1	6	2		28		Bottom rusting
2	6	2		28		Bottom rusting
3	6	2		25		Bottom rusting
4	6	2		25		Bottom rusting

POLE TYPE
1. SINGLE MAST ARM
2. TWIN MAST ARM
3. COMBINATION
4. PEDESTAL
5. UTILITY
6. OTHER

POLE MATL.
1. ALUMINUM
2. STEEL
3. WOOD
4. OTHER

TYPE OF BASE
1. PLATE
2. STEEL TRANSFORMER
3. ALUM. TRANSFORMER

AUXILIARY EQUIPMENT

VIDEO: None

PRE-EMPTION: None

CONFLICT MONITOR

BATTERY BACK-UP: None

DETECTOR AMP

COMMUNICATION: None

SIGNAL TIMING DATA

INTERSECTION: Central Ave & 12th St

CONTROLLER:

DATE: 6/25/14 - Existing Timings

Basic Timing Data

	Ph1 - N/S	Ph2 - E/W	Ph3 -	Ph4 -	Ph5 -	Ph6 -	Ph7 -	Ph8 -
Min Grn								
Passage								
Max 1	23	22						
Max 2								
Yellow	4.0	4.0						
Red Clr	0.0	0.0						
Walk	13	14						
Ped Clear	10	7						
Recall								
Lock/Non								
Act/Non-Act								

Coordination Plan Data

Dial 1/Split 1 Cycle: Offset:

Phase	1	2	3	4	5	6	7	8
Time								
Mode								

Active Periods:

Dial 2/Split 1 Cycle: Offset:

Phase	1	2	3	4	5	6	7	8
Time								
Mode								

Active Periods:

Dial 3/Split 1 Cycle: Offset:

Phase	1	2	3	4	5	6	7	8
Time								
Mode								

Active Periods:

Phasing

N

INDICATE NORTH

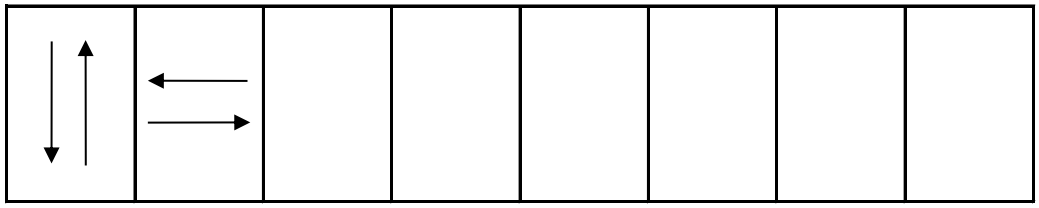

1 2

City of Fort Dodge

12th St + Central

SIGNAL LAYOUT:

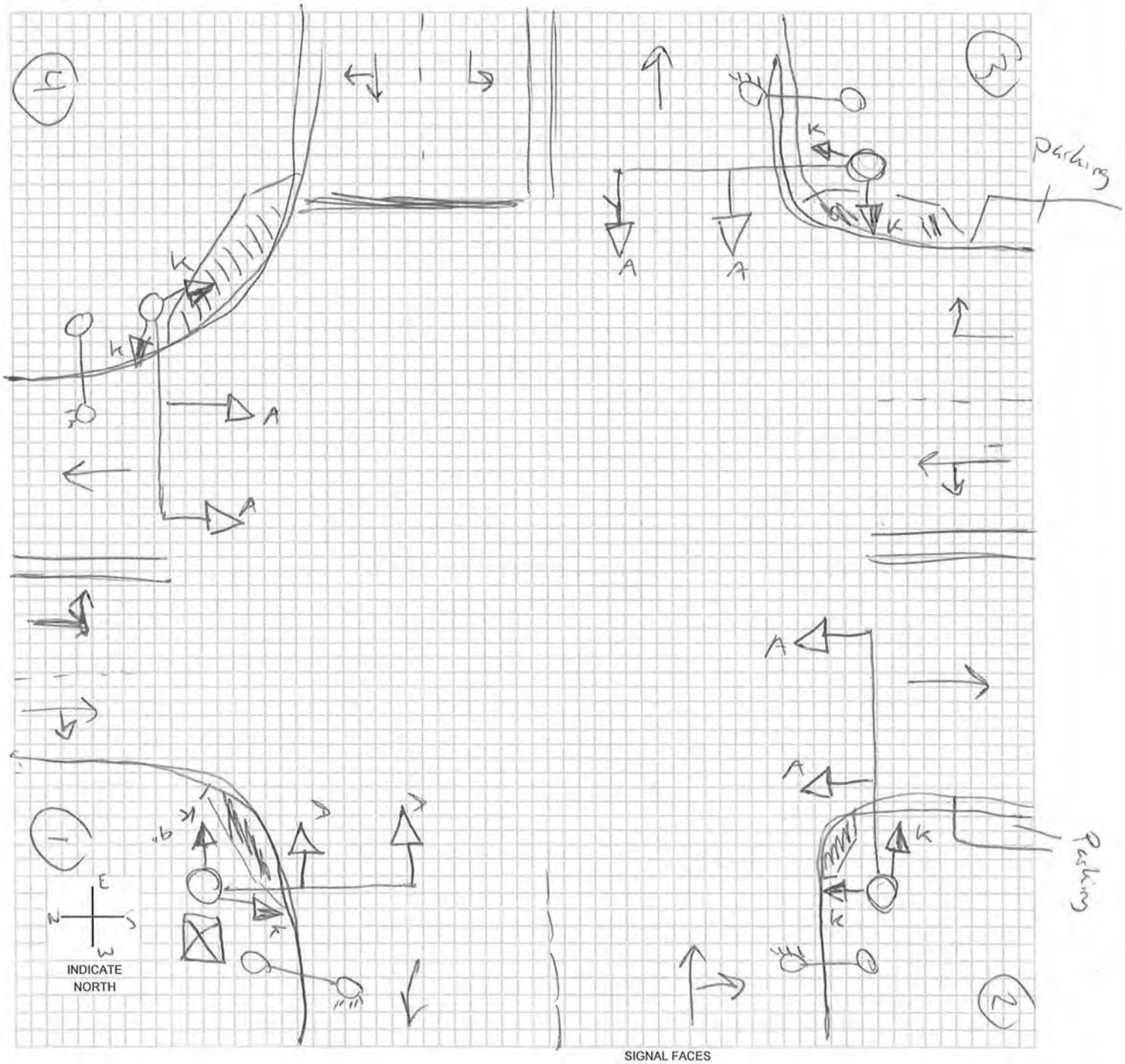

SIGNAL FACES

	A	B	C	D	E	F	G	H	I	J	K	L	M	O
	12 R	12 R	12 R	12 R	12 R	12 R	12 ◄R	12 ◄R	12 R	12 R	DW	W/DW	W DW	
	12 Y	12 ◄Y 12 Y	12 Y	12 Y	12 Y	12 ◄Y	12 ◄Y	12 ◄Y	12 Y	12 Y	W	CD		
	12 G	12 ◄G 12 G	12 G	12 G	12 ◄G	12 ◄G	12 ◄G	12 ◄FY	12 G	12 G			N	
			12 ◄G	12 ◄Y				12 ◄G	12 G►	12 Y►			W CD DW	
				12 ◄G						12 G►				

LEGEND

- (7) POLE & NUMBER
- SIGNAL INDICATION
- PEDESTRIAN SIGNAL INDICATION
- PB PUSHBUTTON
- 00-00-PD LOOP DECTETOR
- DISTANCE FROM STOP LINE - AREA OF DETECTION - PRESENCE PR; PULSE P; DELAY D; NO DELAY ND; EXTENSION E
- CONTROLLER
- (M) METER
- VIDEO DET CAMERA

-* OPTICALLY PROGRAMMABLE

Intersection: Central Ave & 12th St ID #: 212

Crash Summary	**Trends**
1. Crash rate is just below statewide average (0.71 crashes/MEV) 2. 7 of 25 crashes were injury crashes. The most severe crash was a minor injury crash. 3. Ran traffic signal (28%) was reported most frequently as the major cause (6 crashes indicated the surface condition was wet or snow). 4. One vehicle was reported as striking a fixed object: other (1) 5. 24% of the crashes occurred between 10 PM to 4 AM 6. 23% of the drivers involved in the crashes were under the age of 30; 20% were over the age of 60.	1. Prior to 2010, the intersection averaged 3 crashes per year. Since 2010, the intersection averages less than 2 crashes per year. 2. 28% of the crashes were broadside/right angle crashes, 24% were sideswipe in the same directions, and 20% were rear-end. 3. 60% of the crashes involved a southbound vehicle. 20% of the crashes involved a parked vehicle

Mitigation Options / Potential Improvements

1. For better pedestrian accommodations and protect parking, sidewalk extensions were constructed in 3 of the intersection corners. These restrict the available traveled way width and have reduced the southbound approaching lane with to 10 ft for both the through and left turn lanes. Most of the sideswipe crashes are southbound. To widen these lanes, either southbound parking would need to be removed and the extension shortened/removed or the northbound receiving lane narrowed (this may cause difficulty for large vehicles turning north. If the northbound receiving lane is narrowed, parking south of the intersection may need to be removed (up to 4 stalls) to align the northbound lanes through the intersection.

Funding Potential

1. Unlikely to qualify for TSIP funding due to minimal crashes and low severity.

Cost Opinion

Intersection	Item	Period for Modification		
		Short-Term	Mid-Term	Long-Term
		(0-2 Year)	(2-5 Years)	(5-15 Years)
Central Ave & 12th St	Widen Southbound Lanes - Pavement Markings	$5,000		
Total		$5,000		

Intersection Crash Summary

Location: Central Ave & 12th St
City/County: Fort Dodge, Webster County
Time Period: 2004-May 2014 Crash Period = 10.5 years
Prepared by: OMV

NUMBER OF CRASHES

0	Fatal Crashes	0 fatalities	0 injuries
0	Major Injury Crashes		0 injuries
1	Minor Injury Crashes		1 injuries
6	Possible/Unknown Injury Crashes		7 injuries
18	Property Damage Only Crashes		
Totals: 25	Crashes	0 fatalities	8 injuries

CRASH RATES

Total Crash Rate =	25	/	35.39 MEV	=	0.71 Total Crashes/MEV
Fatal Crash Rate =	0	/	35.39 MEV	=	0.00 Fatal Crashes/MEV
Fatal/Injury Crash Rate =	7	/	35.39 MEV	=	0.20 F & I Crashes/MEV

CRASH FREQUENCY

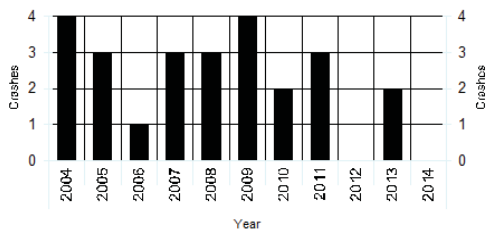

CRASH TYPE

1 Head-on	6 Sideswipe, Same Direction	Non Vehicle Collision Type
5 Rear-end Crash	1 Sideswipe, Opposite Direction	0 Pedestrian
7 Broadside/Right angle Crash	0 Parked	0 Bicycle
2 Angle, Oncoming Left Turn	0 Other	1 Fixed Object
0 Backing	1 Unknown	1 No Object Reported

TRAFFIC - AADT

North Approach =	5800
South Approach =	3140
East Approach =	4900
West Approach =	4630
Million Entering Vehicles (MEV) =	35.39

Notes:
IDOT 2007 AADT

12thStandCentral

2004 - 2014 Reportable Crashes

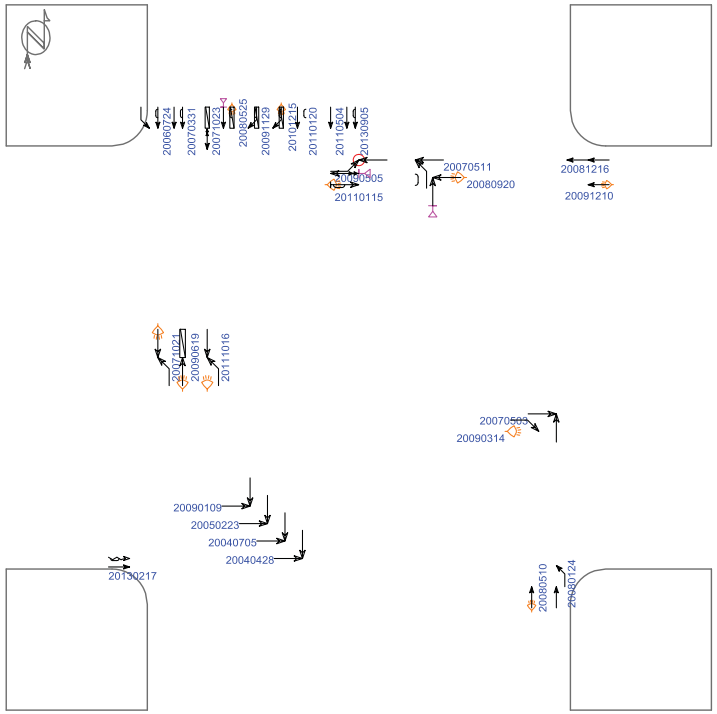

(3) crashes could not be placed in this schematic

Straight	Parked	Pedestrian	Fixed objects:
Stopped	Erratic	Bicycle	General / Pole
Unknown	Out of control	Injury	Signal / Curb
Backing	Right turn	Fatality	Tree / Animal
Overtaking	Left turn	Nighttime	3rd vehicle
Sideswipe	U-turn	DUI	Extra data

Pd' Programming, Inc. 07/10/2014

Iowa Department of Transportation

Major Cause Summary

12th St and Central Ave Connector

Report Version 1.1 Jan 2005

Analysis Years: 2004 [4], 2005 [3], 2006 [1], 2007 [3], 2008 [3], 2009 [4], 2010 [2], 2011 [3], 2013 [2]

Crash Summary:

Fatal	-
Major Injury	-
Minor Injury	1
Possible/Unknown	6
PDO	18
Total Crashes	25

Injury Summary:

Fatal	-
Major Injury	-
Minor Injury	1
Possible	7
Unknown	-
Total Injuries	8

TOT Property Damage: $83,856

AVG Property Damage: $3,354

Surface Condition Summary:

Dry	18
Wet	3
Ice	-
Snow	3
Slush	-
Sand/Dirt/Oil/Gravel	-
Water	-
Other	-
Unknown	1
Not Reported	-
Total Crashes	25

Major Cause Summary:

	Animal		Improper Backing
7	Ran Traffic Signal		Illegally Parked/Unattended
	Ran Stop Sign		Swerving/Evasive Action
	Crossed Centerline		Over-Correcting/Over-Steering
	FTYROW: At Uncontrolled Intersection		Downhill Runaway
	FTYROW: Making Right Turn on Red Signal		Equipment Failure
	FTYROW: From Stop Sign		Separation of Units
	FTYROW: From Yield Sign		Ran Off Road - Right
3	FTYROW: Making Left Turn		Ran Off Road - Straight
	FTYROW: From Driveway	1	Ran Off Road - Left
2	FTYROW: From Parked Position		Lost Control
	FTYROW: To Pedestrian		Inattentive/Distracted By: Passenger
	FTYROW: Other (explain in narrative)		Inattentive/Distracted By: Use of Phone or Other
	Traveling Wrong Way or on Wrong Side of Rd		Inattentive/Distracted By: Fallen Object
	Driving Too Fast for Conditions		Inattentive/Distracted By: Fatigued/Asleep
	Exceeded Authorized Speed		Other: Vision Obstructed
1	Made Improper Turn		Oversized Load/ Oversized Vehicle
	Improper Lane Change		Cargo/Equipment Loss or Shift
3	Followed Too Close	3	Other: Other Improper Action
	Disregarded Railroad Signal	4	Unknown
	Disregarded Warning Sign		Other: No Improper Action
	Operating Vehicle in Reckless/Aggressive Manner	1	None Indicated

Selection Filter:

None

Analyst: OMV

Notes: Radius = 100'

Iowa Department of Transportation

Driver and Time Summary

12th St and Central Ave Connector

Report Version 1.0 Aug 2006

Crash Time of Day Summary:

From / To	00:00 01:59	02:00 03:59	04:00 05:59	06:00 07:59	08:00 09:59	10:00 11:59	12:00 13:59	14:00 15:59	16:00 17:59	18:00 19:59	20:00 21:59	22:00 23:59	NR	Total	%
SUN	1	1	-	-	1	1	-	-	-	1	-	1	-	6	24
MON	-	-	-	-	1	-	-	-	-	1	-	-	-	2	8
TUE	-	-	-	1	-	-	-	-	1	1	-	-	-	3	12
WED	-	-	-	-	-	1	-	3	1	-	-	-	-	5	20
THU	-	-	-	-	-	-	1	-	-	-	-	1	-	2	8
FRI	-	-	-	-	-	1	2	-	-	1	-	-	-	4	16
SAT	-	-	-	-	-	-	-	-	1	-	-	2	-	3	12
Tot.	1	1		1	2	3	3	3	3	4		4		25	
%	4	4		4	8	12	12	12	12	16		16			100

Driver Age/Gender Summary:

Age	Male	Female	NR	Drivers	%
<14	-	-	-		
14	-	-	-		
15	-	-	-		
16	-	1	-	1	2
17	-	-	-		
18	-	-	-		
19	1	2	-	3	6
20	-	1	-	1	2
21 to 24	1	2	-	3	6
25 to 29	1	1	1	3	6
30 to 34	-	4	-	4	8
35 to 39	-	2	-	2	4
40 to 44	2	3	-	5	10
45 to 49	2	1	-	3	6
50 to 54	1	1	-	2	4
55 to 59	1	-	-	1	2
60 to 64	-	2	-	2	4
65 to 69	-	3	-	3	6
70 to 74	1	-	-	1	2
75 to 79	3	-	-	3	6
80 to 84	-	-	-		
85 to 89	-	1	-	1	2
90 to 94	-	-	-		
95 plus	-	-	-		
NR	1	-	9	10	21
Drivers	14	24	10	48	
%	29	50	21		100

Drug/Alcohol Summary:

	Total	%
Drug		
Alcohol, Less than Statutory		
Alcohol, Statutory	2	8
Drug/Alcohol, Less than Statutory		
Drug/Alcohol, Statutory		
Refused		
Under Influence of Alc/Drugs/Meds		
None Indicated	23	92
Total Crashes	25	100

Fixed Object Struck Summary:

	Vehs.	%
Bridge/Bridge rail/Overpass		
Underpass/Structure Support		
Culvert		
Ditch/Embankment		
Curb/Island/Raised Median		
Guardrail		
Concrete Barrier		
Tree		
Pole - Utility/Light/Etc		
Sign Post		
Mailbox		
Impact Attenuator		
Other Fixed Object	1	2
None	47	98
Total Vehicles	48	100

Selection Filter:

None

Analyst: OMV

Notes: Radius = 100'

Intersection: Central Ave & 12th St ID#: 212

Lane Width	**Turn Lanes**
Approaching E/S/W - 12 ft N - 10 ft	Left turn lanes on N/E approaches No right turn lanes
Sidewalk/ADA Ramps	**Lighting**
Sidewalks exist in every corner. Sidewalks are brick pavers with some minor faulting. There are no detectable warning panels.	There is no lighting immediately at the intersection. The all approaches have corridor street lighting with the nearest light pole being 10 ft from the signal poles. Decorative street lighting exists along Central Ave. Housing indicated 250 watt high pressure sodium fixtures along 12th St.
Parking	**Access/Driveways**
Parking exists along the NW, SE, and SW corners of both streets. No parking is allowed along the NE corner (both streets), adjacent to the park.	There is a driveway south on 12th St on the east side, 40 ft south of the intersection. A public intersection exists 100 ft north of the intersection. The nearest intersection along Central Ave is 175 ft west of 12th St.
Miscellaneous	
1. See discussion on lane widths in the Safety Audit. 2. Detectable warning panels should be installed. This may require removal/replacement of the existing brick sidewalk. This work should be considered at the same time as the traffic signal replacement.	

Cost Opinion

Intersection	Item	Period for Modification		
		Short-Term (0-2 Years)	Mid-Term (2-5 Years)	Long-Term (5-15 Years)
Central Ave & 12th St	Construct ADA Sidewalk Ramps	$4,000		
Total		$4,000		

CLICK TO RETURN TO SIGNAL LOCATION MAP

1st Ave S & S 15th St ID#: 313

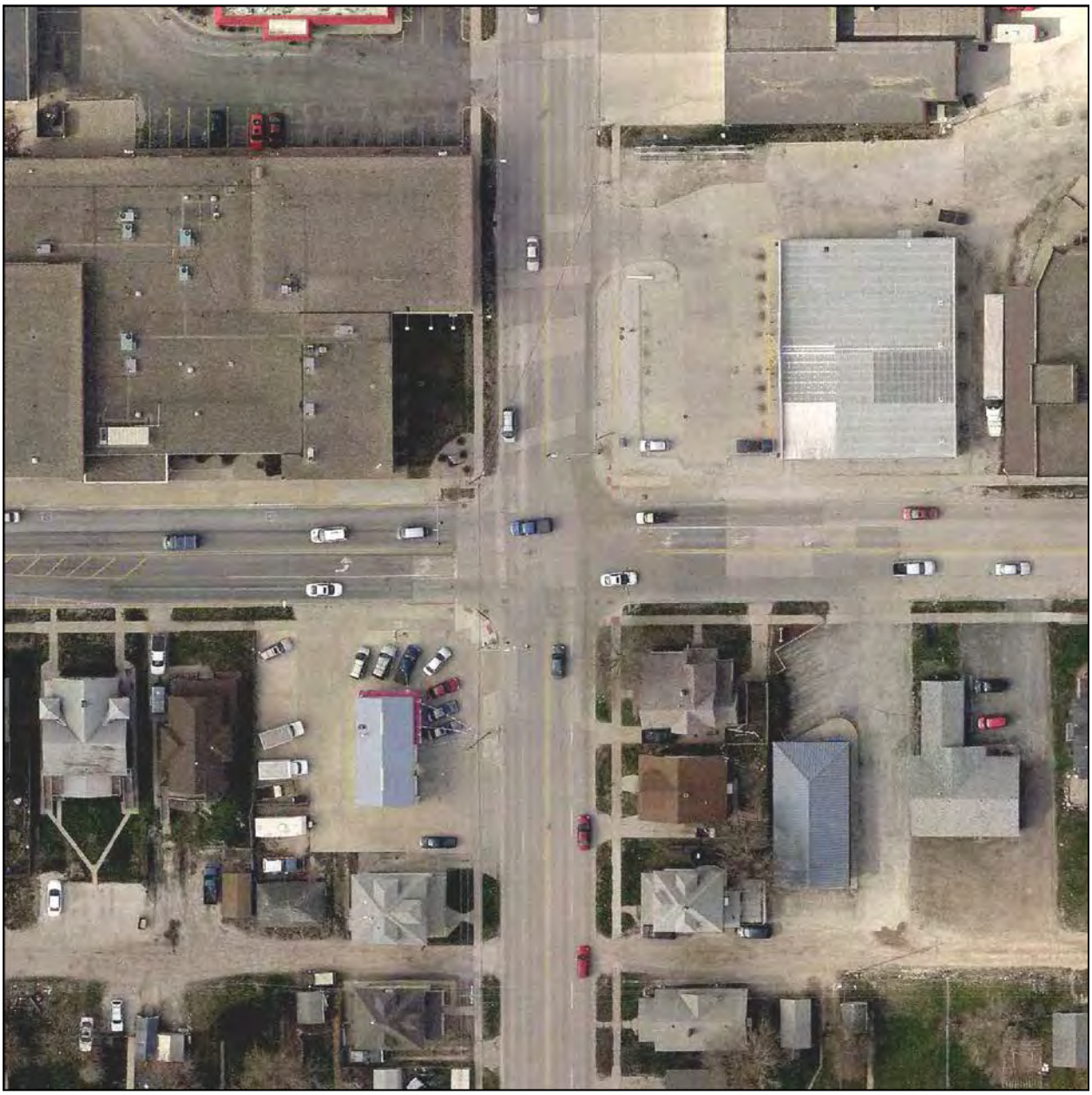

Intersection: 1st Ave S & S 15th St ID#: 313

Signal Evaluation	MUTCD Issues
1. PEEK 3000 Series signal and M3000 master controllers 2. Peek VideoTrak detection. 3. Permissive only left turn phasing on 1st Ave S; split phasing on S 15th St 4. A fiber optic distribution panel exists within the cabinet, however, no equipment connects to it 5. Does not have battery back-up system	1. Have circular indications over left turn lanes. Acceptable per previous MUTCD. Should be changed to flashing yellow arrow to comply with 2009 Edition. 2. Pedestrian signal heads should be replaced to include countdown timers. 3. Pedestrian pushbutton signs have been damaged. 4. When replacing street name signs, signs on mast arms shall have 12", upper and lowercase lettering 5. Update clearance (yellow and red) and pedestrian intervals to current standards of practice

Misc. Comments

1. The installation of a master controller and other communication equipment seems to indicate coordination amongst adjacent intersections. However, no coordination timing settings were present within the signal controller.
2. Pushbuttons are damaged and should be replaced.
3. Trim tree in the SE corner to improve visibility of the pedestrian head
4. City staff has indicated concerns with existing video detection. It is advisable to plan on replacing the existing system.
5. Two signal poles show signs of being struck by vehicles.
6. Split phasing was implemented, 20 years ago, for north/south traffic as a safety measure. The split phasing should remain in place until a time when improvements are made for these approaches to either create dedicated left turn lanes or convert S 15th St to a three-lane roadway. Converting to a three-lane roadway should be considered along the entire S 15th St corridor and not just at isolated intersections.
7. No signal head backplates exists
8. The Fire Department is located within a block of this intersection. They indicated a desire to include emergency vehicle preemption at this intersection. Due to the proximity to the station, equipment could be a simple pushbutton activated within the station.

Budget Needs

Intersection	Item	Period for Modification		
		Short-Term (0-2 Years)	Mid-Term (2-5 Years)	Long-Term (5-15 Years)
1st Ave S & S 15th St	Trim Trees for Pedestrian Head visibility	$500		
	Replace Pedestrian Pushbuttons and Signs	$2,400		
	Install EVP for Fire Station	$10,000		
	Replace Damaged Poles	$20,000		
	Install Backplates on Signal Heads (backplates do not exist for current signal heads)	-		
	Replace Street Name Signs		$2,600	
	Implement Countdown Pedestrian Signals		$6,400	
	Install Video Detection		$35,000	
	Replace/Upgrade Controller and Cabinet			$20,000
	Implement Flashing Yellow Arrows			$30,000
	Relocate/Install new Signal Poles			* $60,000
	Annual Maintenance	$800	$1,200	$4,000
Total		$33,700	$45,200	$114,000

*- Does not include ROW acquisition

SIGNAL EQUIPMENT DATA

INTERSECTION: 1st Ave S & S 15th St

DATE: 6/25/14

POWER: Underground

ZONE: 3

ADDRESS:

ID: 313

CONTROLLER:
BRAND: Peek Traffic
MODEL: 3000 Series

SOFTWARE VER:

DETECTORS:
LOOP: Peek Traffic Cabinet Power Supply
(Not Active)
VIDEO: Videotrak-910 Peek Traffic

PUSHBUTTONS:

POLE DATA

POLE NO.	POLE TYPE	POLE MATL.	TYPE OF BASE	ARM LENGTH / PEDSTL. HEIGHT		REMARKS
1	3	2	2	26		Dent in base, PB sign missing, PB sign bent
2	1	2	2	26		
3	3	2	2	26		Dent in base
4	1	2	2	26		PB sign bent

POLE TYPE
1. SINGLE MAST ARM
2. TWIN MAST ARM
3. COMBINATION
4. PEDESTAL
5. UTILITY
6. OTHER

POLE MATL.
1. ALUMINUM
2. STEEL
3. WOOD
4. OTHER

TYPE OF BASE
1. PLATE
2. STEEL TRANSFORMER
3. ALUM. TRANSFORMER

AUXILIARY EQUIPMENT

VIDEO: Videotrak-910

PRE-EMPTION

CONFLICT MONITOR: Peek Traffic Double Diamond

BATTERY BACK-UP: None

DETECTOR AMP

COMMUNICATION

Also: Peek Traffic Master in use

SIGNAL TIMING DATA

INTERSECTION: 1st Ave S & S 15th St

CONTROLLER:

DATE: 6/25/14 - Existing Timings

Basic Timing Data

	Ph1 -	Ph2 - EB	Ph3 -	Ph4 - NB	Ph5 -	Ph6 - WB	Ph7 -	Ph8 - SB
Min Grn	8	10	8	8	8	10	8	8
Passage	0.0	1.0	0.0	1.0	0.0	1.0	0.0	1.0
Max 1	30	30	30	30	30	30	30	30
Max 2	30	30	30	30	30	30	30	30
Yellow	4.0	4.5	4.0	4.0	4.0	4.5	4.0	4.0
Red Clr	0.0	12.0	0.0	12.0	0.0	12.0	0.0	12.0
Walk	0	8	0	10	0	8	0	10
Ped Clear	0		0	12	0	12	0	10
Recall								
Lock/Non								
Act/Non-Act								

Coordination Plan Data

NOT IN COORDINATION

Dial 1/Split 1 Cycle: Offset:

Phase	1	2	3	4	5	6	7	8
Time								
Mode								

Active Periods:

Dial 2/Split 1 Cycle: Offset:

Phase	1	2	3	4	5	6	7	8
Time								
Mode								

Active Periods:

Dial 3/Split 1 Cycle: Offset:

Phase	1	2	3	4	5	6	7	8
Time								
Mode								

Active Periods:

Phasing

N

INDICATE NORTH

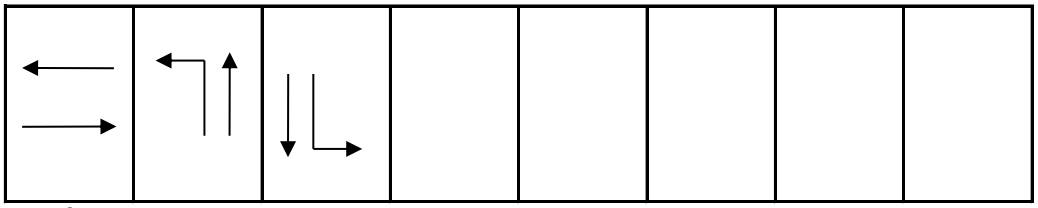

2 & 6 4 8

City of Fort Dodge 1st Ave S + S 15th St

SIGNAL LAYOUT:

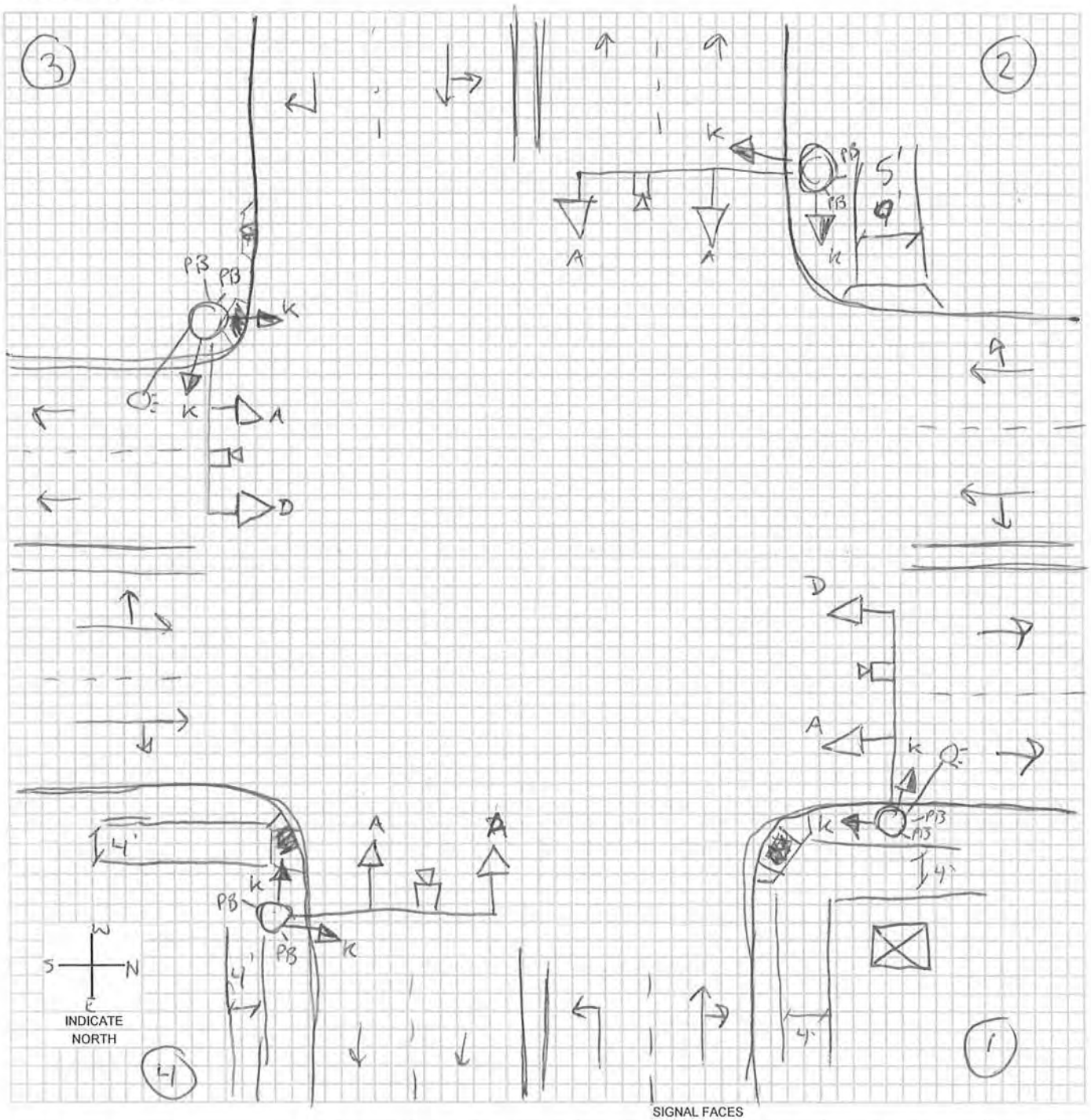

SIGNAL FACES

A	B	C	D	E	F	G	H	I	J	K	L	M	O
12 R	12 R	12 R	12 R	12 R	12 R	◄R	◄R	12 R	12 R	DW	W/DW	W DW	
12 Y	12 ◄Y / 12 Y	12 Y	12 Y	12 Y	12 ◄Y	12 ◄Y*	12 ◄Y	12 Y	12 Y	W	CD		
12 G	12 ◄G / 12 G	12 G	12 G	12 ◄G	12 ◄G	12 ◄G	12 ◄FY	12 G	12 G			N: W CD DW	
		12 ◄G	12 ◄Y				12 ◄G	12 G►	12 Y►				
			12 ◄G						12 G►				

LEGEND

- (7) POLE & NUMBER
- SIGNAL INDICATION
- PEDESTRIAN SIGNAL INDICATION
- PB PUSHBUTTON
- 00-00-PD LOOP DECTETOR
- DISTANCE FROM STOP LINE - AREA OF DETECTION - PRESENCE PR; PULSE P; DELAY D; NO DELAY ND; EXTENSION E
- CONTROLLER
- (M) METER
- VIDEO DET CAMERA

-* OPTICALLY PROGRAMMABLE

Intersection: 1st Ave S & S 15th St ID #: 313

Crash Summary	**Trends**
1. Crash rate is at statewide average (0.94 crashes/MEV). 2. 13 of the 56 crashes were injury crashes. The most severe crash was minor injury crash. 3. Running a traffic signal (16%), following too close (13%), and failure to yield ROW making a left turn (11%) were reported most frequently as the major causes (19 indicated the surface condition was wet, ice, snow, or slush) 4. Two vehicles were reported striking a fixed object: a pole (2) 5. 57% of the crashes occurred between 2 PM and 8 PM. 6. 49% of the drivers involved in the crashes were under the age of 30	1. From 2004 to 2008, the intersection experienced at least 6 crashes per year. From 2009 to 2013, the intersection experienced 5 or fewer crashes per year (exception was 2011 with 7). 2. 43% of the crashes were rear-end crashes. 3. 20% of the crashes involved an eastbound/westbound through vehicle colliding with an opposing left turning vehicle.

Mitigation Options / Potential Improvements

1. Convert S 15th St to three lanes, dedicated left turn lanes will reduce the potential for rear-end collisions. Some signal modifications may be necessary to maintain a signal head over each lane.
2. Align the east/west left turn lanes so the line up across from each other, this will improve the vision of drivers and reduce the potential for a collision between through and opposing left turning vehicles. Some signal modifications may be necessary to maintain a signal head over each lane.

Funding Potential

1. Beyond GO bonds, TSIP is a likely funding source. The three-lane conversion and alignment of left turn lanes may qualify for the "site specific" funding portion of TSIP. The signal modifications may qualify for "traffic control device" funding portion or be included with the conversion or alignment projects.

Cost Opinion

Intersection	Item	Period for Modification		
		Short-Term (0-2 Years)	Mid-Term (2-5 Years)	Long-Term (5-15 Years)
1st Ave S & S 15th St	Convert S 15th St to 3 Lanes			#
	Revise Pavement Markings to align E/W Left Turn Lanes		* $8,000	
Total			* $8,000	#

#- See discussion on converting S 15th St to three lanes for cost opinion
*- Traffic signal modifications would be additional

Intersection Crash Summary

Location: 1st Ave S & S 15th St
City/County: Fort Dodge, Webster County
Time Period: 2004- May 2014 Crash Period = 10.5 years
Prepared by: OMV

NUMBER OF CRASHES

0	Fatal Crashes	0 fatalities	0 injuries
0	Major Injury Crashes		0 injuries
3	Minor Injury Crashes		4 injuries
10	Possible/Unknown Injury Crashes		12 injuries
43	Property Damage Only Crashes		
Totals: 56	Crashes	0 fatalities	16 injuries

CRASH RATES

Total Crash Rate =	56	/	59.60 MEV	=	0.94 Total Crashes/MEV
Fatal Crash Rate =	0	/	59.60 MEV	=	0.00 Fatal Crashes/MEV
Fatal/Injury Crash Rate =	13	/	59.60 MEV	=	0.22 F & I Crashes/MEV

CRASH FREQUENCY

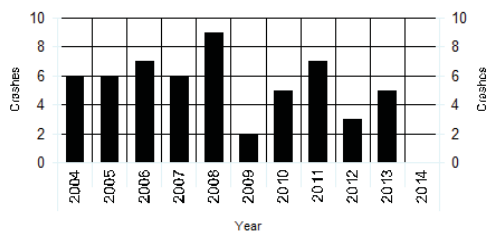

CRASH TYPE

1 Head-on	3 Sideswipe, Same Direction	Non Vehicle Collision Type	
24 Rear-end Crash	0 Sideswipe, Opposite Direction	0 Pedestrian	
15 Broadside/Right angle Crash	0 Parked	0 Bicycle	
10 Angle, Oncoming Left Turn	0 Other	2 Fixed Object	
0 Backing	1 Unknown		

TRAFFIC - AADT

North Approach =	8600
South Approach =	6700
East Approach =	8700
West Approach =	7100
Million Entering Vehicles (MEV) =	59.60

Notes:
IDOT 2011 AADT

1st Ave S & S 15th St

2004 - 2014 Reportable Crashes

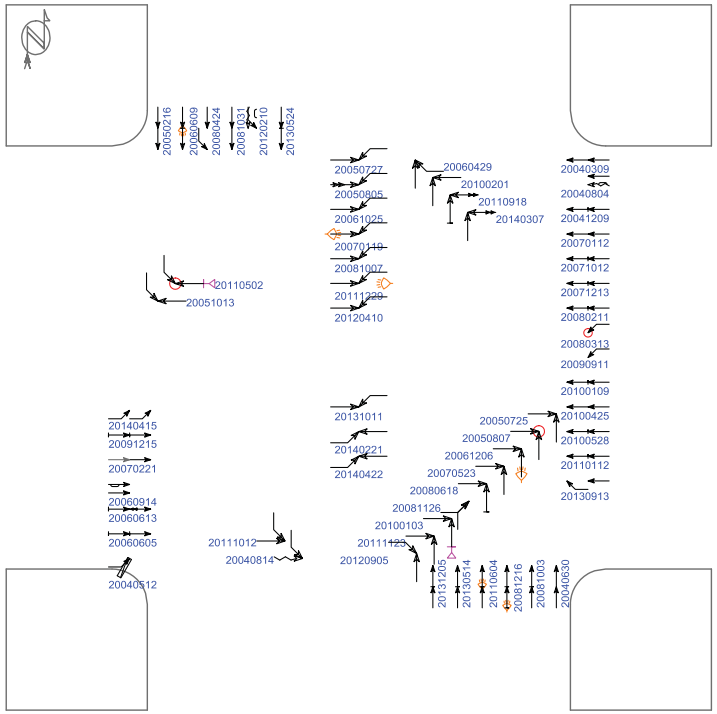

(0) crashes could not be placed in this schematic

Straight	Parked	Pedestrian	Fixed objects:
Stopped	Erratic	Bicycle	General, Signal, Tree, Pole, Curb, Animal
Unknown	Out of control	Injury	
Backing	Right turn	Fatality	
Overtaking	Left turn	Nighttime	3rd vehicle
Sideswipe	U-turn	DUI	Extra data

Pd' Programming, Inc. 07/11/2014

Iowa Department of Transportation

Major Cause Summary

1st Ave S & S 15th St

Report Version 1.1 Jan 2005

Analysis Years: 2004 [6], 2005 [6], 2006 [7], 2007 [6], 2008 [9], 2009 [2], 2010 [5], 2011 [7], 2012 [3], 2013 [5]

Crash Summary:

Fatal	-
Major Injury	-
Minor Injury	3
Possible/Unknown	10
PDO	43
Total Crashes	56

Injury Summary:

Fatal	-
Major Injury	-
Minor Injury	4
Possible	11
Unknown	1
Total Injuries	16

TOT Property Damage: $222,619

AVG Property Damage: $3,975

Surface Condition Summary:

Dry	36
Wet	13
Ice	4
Snow	2
Slush	-
Sand/Dirt/Oil/Gravel	-
Water	-
Other	-
Unknown	1
Not Reported	-
Total Crashes	56

Major Cause Summary:

	Animal		Improper Backing
9	Ran Traffic Signal		Illegally Parked/Unattended
	Ran Stop Sign		Swerving/Evasive Action
3	Crossed Centerline		Over-Correcting/Over-Steering
	FTYROW: At Uncontrolled Intersection		Downhill Runaway
	FTYROW: Making Right Turn on Red Signal	1	Equipment Failure
1	FTYROW: From Stop Sign		Separation of Units
	FTYROW: From Yield Sign	2	Ran Off Road - Right
6	FTYROW: Making Left Turn		Ran Off Road - Straight
	FTYROW: From Driveway		Ran Off Road - Left
	FTYROW: From Parked Position	2	Lost Control
	FTYROW: To Pedestrian	1	Inattentive/Distracted By: Passenger
1	FTYROW: Other (explain in narrative)		Inattentive/Distracted By: Use of Phone or Other
1	Traveling Wrong Way or on Wrong Side of Rd		Inattentive/Distracted By: Fallen Object
3	Driving Too Fast for Conditions		Inattentive/Distracted By: Fatigued/Asleep
	Exceeded Authorized Speed	1	Other: Vision Obstructed
1	Made Improper Turn		Oversized Load/ Oversized Vehicle
	Improper Lane Change		Cargo/Equipment Loss or Shift
7	Followed Too Close	12	Other: Other Improper Action
	Disregarded Railroad Signal	4	Unknown
	Disregarded Warning Sign	1	Other: No Improper Action
	Operating Vehicle in Reckless/Aggressive Manner		None Indicated

Selection Filter:

None

Analyst: OMV

Notes: Radius=100'

Iowa Department of Transportation

Driver and Time Summary

1st Ave S & S 15th St

Report Version 1.0 Aug 2006

Crash Time of Day Summary:

From	00:00	02:00	04:00	06:00	08:00	10:00	12:00	14:00	16:00	18:00	20:00	22:00			
To	01:59	03:59	05:59	07:59	09:59	11:59	13:59	15:59	17:59	19:59	21:59	23:59	NR	Total	%
SUN	-	-	-	-	1	-	1	-	1	1	-	-	-	4	7
MON	-	-	-	-	-	-	1	-	3	1	-	-	-	5	9
TUE	-	-	-	-	-	1	1	2	2	1	-	-	-	7	12
WED	-	-	-	-	2	3	1	3	5	1	-	-	-	15	27
THU	-	-	-	1	-	1	2	1	2	1	-	-	-	8	14
FRI	-	-	-	2	-	1	1	2	2	3	1	1	-	13	23
SAT	-	1	-	-	1	1	-	1	-	-	-	-	-	4	7
Tot.		1		3	4	7	7	9	15	8	1	1		56	
%		2		5	7	12	12	16	27	14	2	2			100

Driver Age/Gender Summary:

Age	Male	Female	NR	Drivers	%
<14	-	-	-		
14	-	-	-		
15	-	-	-		
16	2	3	-	5	4
17	-	2	-	2	2
18	3	2	-	5	4
19	4	5	-	9	8
20	3	-	-	3	3
21 to 24	4	5	-	9	8
25 to 29	5	7	-	12	10
30 to 34	3	9	-	12	10
35 to 39	2	3	-	5	4
40 to 44	5	5	-	10	9
45 to 49	3	6	-	9	8
50 to 54	6	3	-	9	8
55 to 59	2	2	-	4	3
60 to 64	3	5	-	8	7
65 to 69	2	1	-	3	3
70 to 74	1	1	-	2	2
75 to 79	1	-	-	1	1
80 to 84	1	1	-	2	2
85 to 89	-	-	-		
90 to 94	-	1	-	1	1
95 plus	-	-	-		
NR	1	-	4	5	4
Drivers	51	61	4	116	
%	44	53	3		100

Drug/Alcohol Summary:

	Total	%
Drug	1	2
Alcohol, Less than Statutory		
Alcohol, Statutory		
Drug/Alcohol, Less than Statutory		
Drug/Alcohol, Statutory		
Refused	1	2
Under Influence of Alc/Drugs/Meds	1	2
None Indicated	53	95
Total Crashes	56	100

Fixed Object Struck Summary:

	Vehs.	%
Bridge/Bridge rail/Overpass		
Underpass/Structure Support		
Culvert		
Ditch/Embankment		
Curb/Island/Raised Median		
Guardrail		
Concrete Barrier		
Tree		
Pole - Utility/Light/Etc	2	2
Sign Post		
Mailbox		
Impact Attenuator		
Other Fixed Object		
None	114	98
Total Vehicles	116	100

Selection Filter:

None

Analyst: OMV

Notes: Radius=100'

Intersection: 1st Ave S & S 15th St ID#: 313

Lane Width	**Turn Lanes**
Approaching N/S: 11 ft E/W: 11 ft	Left turn lanes on E/W approaches (negative offset) No right turn lanes
Sidewalk/ADA Ramps	**Lighting**
Sidewalk Ramps exists on all four corners. The NW corner does not have detectable warning panels. Detectable warning panels in the SE corner are not in proper placement.	Combination traffic signal and lighting poles exists in the SW and NE corners. Housings indicated 400 watt high pressure sodium fixtures.
Parking	**Access/Driveways**
No parking existing along S 15th St. Parking has been removed along 1st Ave S for 300 ft approaching eastbound and 800 ft westbound. Parking has been removed departing for 200 ft east and west of the intersection.	The commercial property located in the SW corner has driveways within 30 ft of the intersection. The residential property in the SE corner has driveways within 50 ft. There are no driveways in the NW corner and the only driveway to the commercial property in the NE corner is 100 ft north of the intersection.
Miscellaneous	
1. The intersection may be in need of pavement rehabilitation. 2. There is inconsistent signing/pavement markings when approaching the intersection, specifically east/west.	

Cost Opinion

Intersection	Item	Period for Modification		
		Short-Term (0-2 Years)	Mid-Term (2-5 Years)	Long-Term (5-15 Years)
1st Ave S & S 15th St	Reconstruct ADA Ramp SE & Construct in NW corners	$1,500		
	Relocate Commercial Driveways		$1,500	
	Pavement Rehabilitation			$60,000
Total		$1,500	$1,500	$60,000

CLICK TO RETURN TO SIGNAL LOCATION MAP

Central Ave & 15th St ID#: 314

Intersection: Central Ave & 15th St ID#: 314

Signal Evaluation	MUTCD Issues
1. Siemens Eagle M52 signal controller 2. No video detection. There is evidence of inductive loops in the pavement along Central Ave however there are no amplifiers within the cabinet. Signal is running pre-timed. 3. Two signal poles have been struck by vehicles. 4. The Fire Department is located in the SE corner of the intersection 5. Does not have battery back-up system	1. Have circular indications over left turn lanes. Acceptable per previous MUTCD. Should be changed to flashing yellow arrow to comply with 2009 Edition. 2. Pedestrian signal heads do not include countdown timers. 3. Pedestrian pushbutton signs have been damaged. 4. When replacing street name signs, signs on mast arms shall have 12", upper and lowercase lettering 5. Update clearance (yellow and red) and pedestrian intervals to current standards of practice

Misc. Comments

1. The cabinet has a fiber optic distribution panel included; however, no fiber optic cable is terminated within the panel. City staff indicated there is a hard-wire connection along 15th St
2. Pushbuttons are damaged and should be replaced
3. No signal head backplates exists
4. Installation of detection at the intersection may reduce vehicular delay. Detection system should likely be video detection to be consistent with new traffic signal installations.
5. The Fire Department indicated a desire to include emergency vehicle preemption at this intersection. Due to the proximity to the station, equipment could be a simple pushbutton activated within the station.

Budget Needs

Intersection	Item	Period for Modification		
		Short-Term (0-2 Years)	Mid-Term (2-5 Years)	Long-Term (5-15 Years)
Central Ave & 15th St	Replace Pedestrian Pushbuttons and Signs	$2,400		
	Install EVP for Fire Station	$4,000		
	Replace Damaged Poles	$20,000		
	Install Backplates on Signal Heads (backplates do not exist for current signal heads)	-		
	Replace Street Name Signs		$2,600	
	Implement Countdown Pedestrian Signals		$6,400	
	Install Video Detection		$35,000	
	Replace/Upgrade Controller Cabinet			$20,000
	Implement Flashing Yellow Arrows			$30,000
	Relocate/Install new Signal Poles			* $60,000
	Annual Maintenance	$800	$1,200	$4,000
Total		$27,200	$45,200	$114,000

*- Does not include ROW acquisition

SIGNAL EQUIPMENT DATA

INTERSECTION: Central Ave & 15th St

DATE: 6/25/14

POWER: Underground

ZONE: 3

ADDRESS:

ID: 314

CONTROLLER:
BRAND: Siemens M50
MODEL: 5130-1200-001

SOFTWARE VER: OS #3.34g

DETECTORS:
LOOP: In road, not in box

VIDEO: None

PUSHBUTTONS: Yes

POLE DATA

POLE NO.	POLE TYPE	POLE MATL.	TYPE OF BASE	ARM LENGTH / PEDSTL. HEIGHT		REMARKS
1	1	2	2	26		Cabinet
2	3	2	2	26		Pole has been hit, damage to bottom
3	1	2	2	26		Push buttons in poor condition
4	3	2	2	26		Pole has been hit, damage to basem po

POLE TYPE
1. SINGLE MAST ARM
2. TWIN MAST ARM
3. COMBINATION
4. PEDESTAL
5. UTILITY
6. OTHER

POLE MATL.
1. ALUMINUM
2. STEEL
3. WOOD
4. OTHER

TYPE OF BASE
1. PLATE
2. STEEL TRANSFORMER
3. ALUM. TRANSFORMER

AUXILIARY EQUIPMENT

VIDEO: None

PRE-EMPTION

CONFLICT MONITOR: EDI MMU 16LE

BATTERY BACK-UP: None

DETECTOR AMP

COMMUNICATION

Note: SW side has push buttons but no sidewalk/ramp

SIGNAL TIMING DATA

INTERSECTION: Central Ave & 15th St
CONTROLLER: Siemens M50
DATE: 6/25/14 - Existing Timings

Basic Timing Data

	Ph1 -	Ph2 - N/S	Ph3 -	Ph4 - E/W	Ph5 -	Ph6 -	Ph7 -	Ph8 -
Min Grn	10	15	10	15	10	15	10	15
Passage	4.0	5.0	4.0	5.0	4.0	5.0	4.0	5.0
Max 1	25	35	25	20	25	35	25	35
Max 2	30	50	30	50	30	50	30	50
Yellow	4.0	4.0	4.0	4.0	4.0	4.0	4.0	4.0
Red Clr	1.0	1.0	1.0	1.0	1.0	1.0	1.0	1.0
Walk	0	7	0	7	0	7	0	7
Ped Clear	0	8	0	8	0	8	0	8
Recall								
Lock/Non	NON	NON	NON	NON	NON	NON	NON	NON
Act/Non-Act		NON		NON		NON		NON

Coordination Plan Data

NOT IN COORDINATION

Dial 1/Split 1 Cycle: Offset:

Phase	1	2	3	4	5	6	7	8
Time								
Mode								

Active Periods:

Dial 2/Split 1 Cycle: Offset:

Phase	1	2	3	4	5	6	7	8
Time								
Mode								

Active Periods:

Dial 3/Split 1 Cycle: Offset:

Phase	1	2	3	4	5	6	7	8
Time								
Mode								

Active Periods:

Phasing

N

INDICATE NORTH

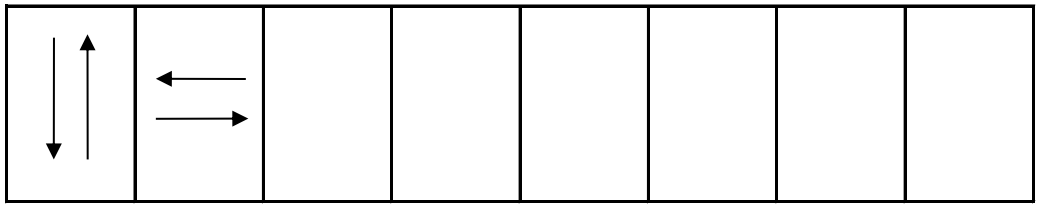

2 4

Central + 15th St

SIGNAL LAYOUT:

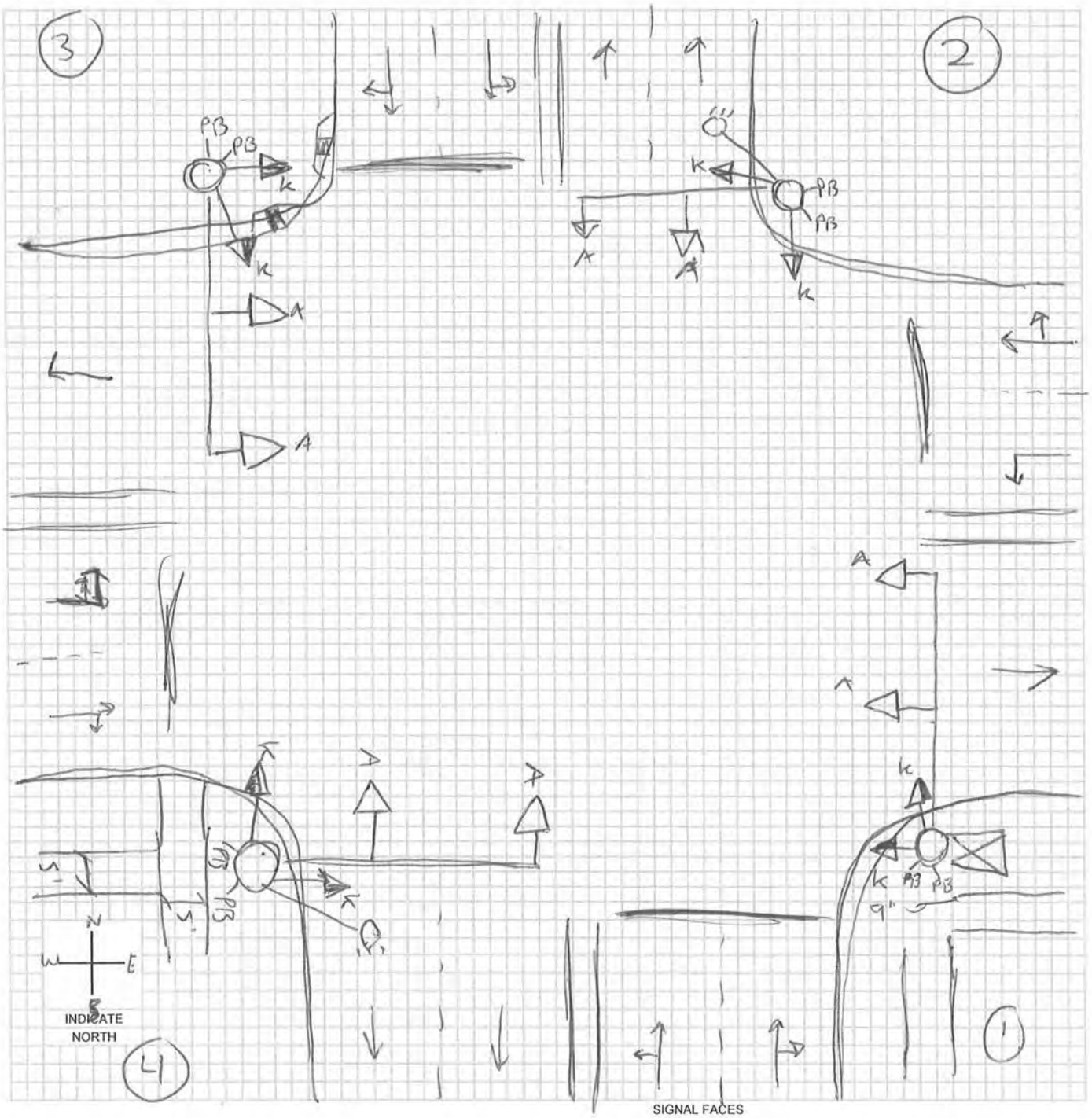

SIGNAL FACES

A	B	C	D	E	F	G	H	I	J	K	L	M	O
12 R	12 R	12 R	12 R	12 R	12 R	◄R	◄R	12 R	12 R	DW	W/DW	W DW	
12 Y	12 ◄Y / 12 Y	12 Y	12 Y	12 Y	12 ◄Y	12 ◄Y	12 ◄Y	12 Y	12 Y	W	CD		
12 G	12 ◄G / 12 G	12 G	12 G	12 ◄G	12 ◄G	12 ◄G	12 ◄FY	12 G	12 G			N: W CD DW	
		12 ◄G	12 ◄Y				12 ◄G	12 G►	12 Y►				
			12 ◄G						12 G►				

LEGEND

- (7) POLE & NUMBER
- SIGNAL INDICATION
- PEDESTRIAN SIGNAL INDICATION
- PB PUSHBUTTON
- 00-00-PD LOOP DECTETOR
- DISTANCE FROM STOP LINE - AREA OF DETECTION - PRESENCE PR; PULSE P; DELAY D; NO DELAY ND; EXTENSION E
- CONTROLLER
- (M) METER
- VIDEO DET CAMERA

-* OPTICALLY PROGRAMMABLE

Intersection: Central Ave & 15th St ID #: 314

Crash Summary	**Trends**
1. Crash rate is above the statewide average (1.16 crashes/MEV). 2. 14 of the 75 crashes were injury crashes. There was one major injury crash. 3. Ran traffic signal (19) and failure to yield right of way making left turn (16) were reported most frequently as the major causes (24 of the crashes indicated the surface condition was wet, ice, snow, or slush). 4. Two vehicles were reported as striking a fixed object: a pole (2) 5. 64% of the crashes occurred between 10 AM and 6 PM. 6. 41% of the drivers involved in the crashes were under the age of 30; 19% were over the age of 60.	1. From 2006 to 2011, the intersection experienced at least 8 crashes per year. 2012 and 2013 experienced 8 total crashes. 2. 20% of the crashes involved an eastbound/westbound through vehicle colliding with an opposing left turning vehicle. 3. 41% of the crashes were broadside/right angle crashes. 20% each were rear-end and angle, oncoming left turn crashes.

Mitigation Options / Potential Improvements

1. Implement coordination timings will reduce the potential for rear-end collisions.
2. Convert S 15th St to three lanes, dedicated left turn lanes will reduce the potential for rear-end collisions. Some signal modifications may be necessary to maintain a signal head over each lane.
3. Align the east/west left turn lanes so the line up across from each other, this will improve the vision of drivers and reduce the potential for a collision between through and opposing left turning vehicles. Some signal modifications may be necessary to maintain a signal head over each lane.

Funding Potential

1. Beyond GO bonds, TSIP is a likely funding source. The three-lane conversion and alignment of left turn lanes may qualify for the "site specific" funding portion of TSIP. The signal modifications may qualify for "traffic control device" funding portion or be included with the conversion or alignment projects.

Cost Opinion

Intersection	Item	Period for Modification		
		Short-Term (0-2 Years)	Mid-Term (2-5 Years)	Long-Term (5-15 Years)
Central Ave & 15th St	Convert S 15th St to 3 Lanes			#
	Revise Pavement Markings to align E/W Left Turn Lanes		* $8,000	
Total			* $8,000	#

#- See discussion on converting S 15th St to three lanes for cost opinion
*- Traffic signal modifications would be additional

Intersection Crash Summary

Location: Central Ave & 15th St
City/County: Fort Dodge, Webster County
Time Period: 2004- May 2014 Crash Period = 10.5 years
Prepared by: OMV

NUMBER OF CRASHES

0	Fatal Crashes	0 fatalities	0 injuries
1	Major Injury Crashes		1 injuries
4	Minor Injury Crashes		5 injuries
9	Possible/Unknown Injury Crashes		13 injuries
61	Property Damage Only Crashes		
Totals: 75	Crashes	0 fatalities	19 injuries

CRASH RATES

Total Crash Rate =	75	/	64.92 MEV	=	1.16 Total Crashes/MEV
Fatal Crash Rate =	0	/	64.92 MEV	=	0.00 Fatal Crashes/MEV
Fatal/Injury Crash Rate =	14	/	64.92 MEV	=	0.22 F & I Crashes/MEV

CRASH FREQUENCY

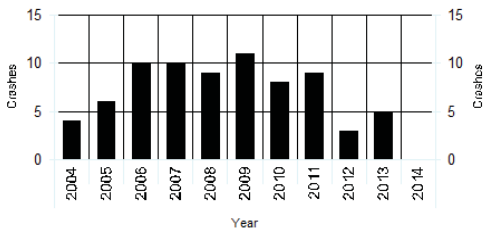

CRASH TYPE

3	Head-on	9	Sideswipe, Same Direction		Non Vehicle Collision Type
15	Rear-end Crash	0	Sideswipe, Opposite Direction	0	Pedestrian
31	Broadside/Right angle Crash	0	Parked	0	Bicycle
15	Angle, Oncoming Left Turn	0	Other	1	Fixed Object
0	Backing	1	Unknown		

TRAFFIC - AADT

North Approach =	13200
South Approach =	12100
East Approach =	2580
West Approach =	6000
Million Entering Vehicles (MEV) =	64.92

Notes:
IDOT 2007 AADT

15th St and Central Ave

2004 - 2014 Reportable Crashes

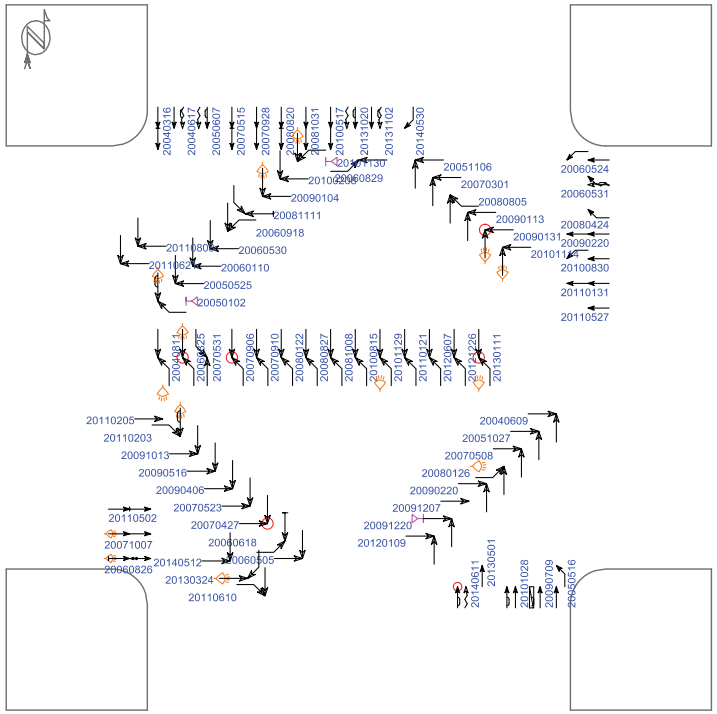

(0) crashes could not be placed in this schematic

Straight, Stopped, Unknown, Backing, Overtaking, Sideswipe, Parked, Erratic, Out of control, Right turn, Left turn, U-turn, Pedestrian, Bicycle, Injury, Fatality, Nighttime, DUI

Fixed objects: General, Signal, Tree, Pole, Curb, Animal

3rd vehicle, Extra data

Pd' Programming, Inc. 07/11/2014

Iowa Department of Transportation

Major Cause Summary

15th St and Central Ave

Report Version 1.1 Jan 2005

Analysis Years: 2004 [4], 2005 [6], 2006 [10], 2007 [10], 2008 [9], 2009 [11], 2010 [8], 2011 [9], 2012 [3], 2013 [5]

Crash Summary:

Fatal	-
Major Injury	1
Minor Injury	4
Possible/Unknown	9
PDO	61
Total Crashes	75

Injury Summary:

Fatal	-
Major Injury	1
Minor Injury	5
Possible	13
Unknown	-
Total Injuries	19

TOT Property Damage: $336,210

AVG Property Damage: $4,483

Surface Condition Summary:

Dry	50
Wet	14
Ice	1
Snow	8
Slush	1
Sand/Dirt/Oil/Gravel	-
Water	-
Other	-
Unknown	1
Not Reported	-
Total Crashes	75

Major Cause Summary:

	Animal		Improper Backing
19	Ran Traffic Signal		Illegally Parked/Unattended
	Ran Stop Sign	1	Swerving/Evasive Action
3	Crossed Centerline	1	Over-Correcting/Over-Steering
	FTYROW: At Uncontrolled Intersection		Downhill Runaway
2	FTYROW: Making Right Turn on Red Signal		Equipment Failure
	FTYROW: From Stop Sign		Separation of Units
	FTYROW: From Yield Sign		Ran Off Road - Right
16	FTYROW: Making Left Turn		Ran Off Road - Straight
	FTYROW: From Driveway	1	Ran Off Road - Left
	FTYROW: From Parked Position		Lost Control
	FTYROW: To Pedestrian	1	Inattentive/Distracted By: Passenger
4	FTYROW: Other (explain in narrative)		Inattentive/Distracted By: Use of Phone or Other
	Traveling Wrong Way or on Wrong Side of Rd	1	Inattentive/Distracted By: Fallen Object
1	Driving Too Fast for Conditions		Inattentive/Distracted By: Fatigued/Asleep
	Exceeded Authorized Speed		Other: Vision Obstructed
1	Made Improper Turn		Oversized Load/ Oversized Vehicle
	Improper Lane Change		Cargo/Equipment Loss or Shift
6	Followed Too Close	12	Other: Other Improper Action
	Disregarded Railroad Signal	3	Unknown
	Disregarded Warning Sign	2	Other: No Improper Action
1	Operating Vehicle in Reckless/Aggressive Manner		None Indicated

Selection Filter:

None

Analyst: OMV

Notes: Radius=100'

Iowa Department of Transportation

Driver and Time Summary

15th St and Central Ave

Report Version 1.0 Aug 2006

Crash Time of Day Summary:

From / To	00:00 01:59	02:00 03:59	04:00 05:59	06:00 07:59	08:00 09:59	10:00 11:59	12:00 13:59	14:00 15:59	16:00 17:59	18:00 19:59	20:00 21:59	22:00 23:59	NR	Total	%
SUN	2	-	-	-	-	-	2	-	2	-	4	-	-	10	13
MON	-	-	-	-	1	3	2	4	3	-	-	-	-	13	17
TUE	-	-	-	-	2	2	3	3	1	3	-	-	-	14	19
WED	-	-	-	1	1	1	4	3	1	-	-	-	-	11	15
THU	-	-	-	-	3	1	2	2	1	-	1	-	-	10	13
FRI	-	-	-	-	-	3	1	1	2	2	2	-	-	11	15
SAT	2	-	-	-	1	-	-	1	-	-	1	1	-	6	8
Tot.	4			1	8	10	14	14	10	5	8	1		75	
%	5			1	11	13	19	19	13	7	11	1			100

Driver Age/Gender Summary:

Age	Male	Female	NR	Drivers	%
<14	-	-	-		
14	-	-	-		
15	-	-	-		
16	4	5	-	9	6
17	1	1	-	2	1
18	4	3	-	7	5
19	1	3	-	4	3
20	4	6	-	10	6
21 to 24	13	6	-	19	12
25 to 29	5	7	-	12	8
30 to 34	3	7	-	10	6
35 to 39	3	4	-	7	5
40 to 44	6	4	-	10	6
45 to 49	6	5	-	11	7
50 to 54	4	8	-	12	8
55 to 59	5	3	-	8	5
60 to 64	2	2	-	4	3
65 to 69	5	4	-	9	6
70 to 74	1	3	-	4	3
75 to 79	-	5	-	5	3
80 to 84	4	1	-	5	3
85 to 89	-	-	-		
90 to 94	1	-	-	1	1
95 plus	-	-	-		
NR	-	-	5	5	3
Drivers	72	77	5	154	
%	47	50	3		100

Drug/Alcohol Summary:

	Total	%
Drug		
Alcohol, Less than Statutory	1	1
Alcohol, Statutory	1	1
Drug/Alcohol, Less than Statutory		
Drug/Alcohol, Statutory		
Refused	1	1
Under Influence of Alc/Drugs/Meds		
None Indicated	72	96
Total Crashes	75	100

Fixed Object Struck Summary:

	Vehs.	%
Bridge/Bridge rail/Overpass		
Underpass/Structure Support		
Culvert		
Ditch/Embankment		
Curb/Island/Raised Median		
Guardrail		
Concrete Barrier		
Tree		
Pole - Utility/Light/Etc	2	1
Sign Post		
Mailbox		
Impact Attenuator		
Other Fixed Object		
None	152	99
Total Vehicles	154	100

Selection Filter:

None

Analyst: OMV

Notes: Radius=100'

Intersection: Central Ave & 15th St ID#: 314

Lane Width	**Turn Lanes**
Approaching N/S: 11 ft E/W: 12 ft	Left turn lanes on E/W approaches (negative offset) No right turn lanes
Sidewalk/ADA Ramps	**Lighting**
Sidewalk ramps exist on the north side of the intersection, both surround storm water intakes. The south side has sidewalks, but no ramps. Only the NW corner has detectable warning panels. Crosswalk and sidewalk slopes may not meet ADA requirements.	Combination traffic signal and lighting poles exists in the SW and NE corners. Housings indicated 400 watt high pressure sodium fixtures.
Parking	**Access/Driveways**
No parking existing along both streets	Many driveways exists within close proximity to the intersection, including the Fire Department driveway being 40 ft south of the intersection.
Miscellaneous	
1. Storm water intakes should be reviewed for potential maintenance/repair	

Cost Opinion

Intersection	Item	Period for Modification		
		Short-Term (0-2 Years)	Mid-Term (2-5 Years)	Long-Term (5-15 Years)
Central Ave & 15th St	Construct ADA Ramps	$2,500		
Total		$2,500		

CLICK TO RETURN TO SIGNAL LOCATION MAP

2nd Ave N & N 15th St ID#: 315

Intersection: 2nd Ave N & N 15th St ID#: 315

Signal Evaluation	MUTCD Issues
1. Siemens Eagle M41 signal controller 2. No video detection. There is evidence of inductive loops in the pavement along 2nd Ave N however there are no amplifiers within the cabinet. Signal is running pre-timed. 3. There is evidence of each signal pole being struck. Object marker signs (OM3-R) have been installed on the NE and SW signal poles. 4. There is a telephone connection within signal cabinet. 5. Does not have battery back-up system	1. Have circular indications over left turn lanes. Acceptable per previous MUTCD. Should be changed to flashing yellow arrow to comply with 2009 Edition. 2. Pedestrian signal heads do not include countdown timers. 3. Pedestrian pushbutton signs have been damaged. 4. When replacing street name signs, signs on mast arms shall have 12", upper and lowercase lettering 5. Update clearance (yellow and red) and pedestrian intervals to current standards of practice

Misc. Comments

1. City staff indicated there is a hard-wire connection along 15th St. There is a telephone connection within signal cabinet.
2. Pushbuttons are damaged and should be replaced
3. No signal head backplates exists
4. Installation of detection at the intersection may reduce vehicular delay. Detection system should likely be video detection to be consistent with new traffic signal installations.

Budget Needs

Intersection	Item	Period for Modification		
		Short-Term (0-2 Years)	Mid-Term (2-5 Years)	Long-Term (5-15 Years)
2nd Ave N & N 15th St	Replace Pedestrian Pushbuttons and Signs	$2,400		
	Replace Damaged Poles	$10,000		
	Install Backplates on Signal Heads (backplates do not exist for current signal heads)	-		
	Replace Street Name Signs		$2,600	
	Implement Countdown Pedestrian Signals		$6,400	
	Install Video Detection		$35,000	
	Replace/Upgrade Controller and Cabinet			$20,000
	Implement Flashing Yellow Arrows			$30,000
	Relocate/Install new Signal Poles			* $60,000
	Annual Maintenance	$800	$1,200	$4,000
Total		$13,200	$45,200	$114,000

*- Does not include ROW acquisition

SIGNAL EQUIPMENT DATA

INTERSECTION: 2nd Ave N & N 15th St

DATE: 6/25/14

POWER: Underground

ZONE: 3

ID: 315

CONTROLLER:
BRAND: Eagle Traffic Control Systems
MODEL: EPAC3800M41

SOFTWARE VER: OS # 3.32m

DETECTORS:
LOOP: On ground but detector empty

VIDEO: None

PUSHBUTTONS: Yes

POLE DATA

POLE NO.	POLE TYPE	POLE MATL.	TYPE OF BASE	ARM LENGTH / PEDSTL. HEIGHT		REMARKS
1	3	2	2	26		1 push button missing
2	1	2	2	26		Can't see Walk
3	3	2	2	26		Push button rusted
4	1	2	2	26		Damage to base, pole, push buttons

POLE TYPE
1. SINGLE MAST ARM
2. TWIN MAST ARM
3. COMBINATION
4. PEDESTAL
5. UTILITY
6. OTHER

POLE MATL.
1. ALUMINUM
2. STEEL
3. WOOD
4. OTHER

TYPE OF BASE
1. PLATE
2. STEEL TRANSFORMER
3. ALUM. TRANSFORMER

AUXILIARY EQUIPMENT

VIDEO: None

PRE-EMPTION

CONFLICT MONITOR: EDI MMU16E

BATTERY BACK-UP: None

DETECTOR AMP: Loops on ground but detector empty

COMMUNICATION

SIGNAL TIMING DATA

INTERSECTION: 2nd Ave N & N 15th St

CONTROLLER: Eagle Traffic Control Systems

DATE: 6/25/14 - Existing Timings

Basic Timing Data

		VEH		VEH	PED	PED		
	Ph1 -	Ph2 - N/S	Ph3 -	Ph4 - E/W	Ph5 - N/S	Ph6 - E/W	Ph7 -	Ph8 -
Min Grn	10	15	10	10	10	15	10	15
Passage	4.0	5.0	4.0	5.0	4.0	5.0	4.0	5.0
Max 1	25	35	25	20	25	35	25	35
Max 2	30	50	30	50	30	50	30	50
Yellow	4.0	4.0	4.0	4.0	4.0	4.0	4.0	4.0
Red Clr	1.0	1.0	1.0	1.0	1.0	1.0	1.0	1.0
Walk	0	7	0	7	0	7	0	7
Ped Clear	0	8	0	8	0	8	0	8
Recall								
Lock/Non	Non	Non	Non	Non	Non	Non	Non	Non
Act/Non-Act		Non		Non		Non		Non

Coordination Plan Data

Dial 1/Split 1/2 Cycle: 55 Offset:

Phase	1	2	3	4	5	6	7	8
Time	0	35	0	20	0	0	0	0
Mode	6	1	6	0	0	0	0	0

Active Periods:

Dial 2/Split 1 Cycle: Offset:

Phase	1	2	3	4	5	6	7	8
Time								
Mode								

Active Periods:

Dial 3/Split 1 Cycle: Offset:

Phase	1	2	3	4	5	6	7	8
Time								
Mode								

Active Periods:

Phasing

INDICATE NORTH

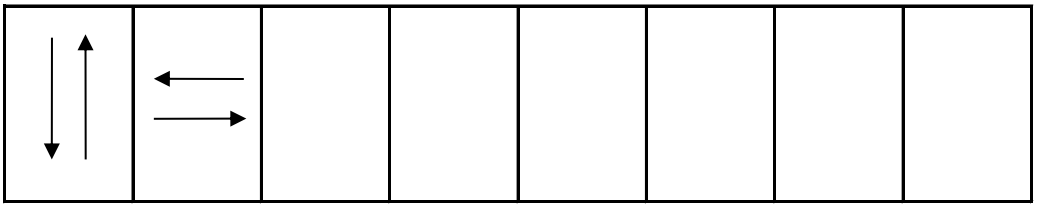

2 4

SIGNAL LAYOUT: 2nd Ave N + N 15th St

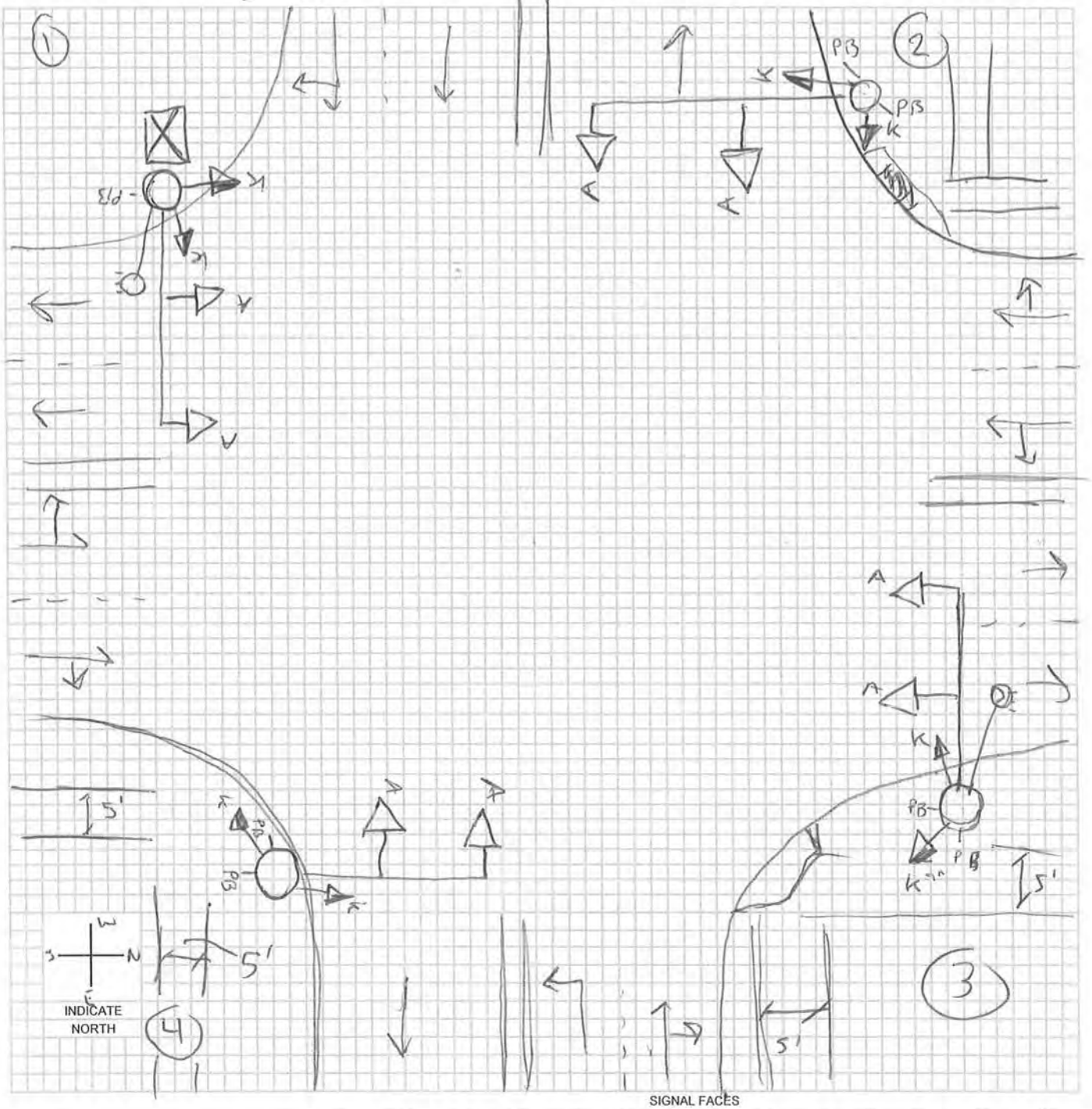

SIGNAL FACES

A	B	C	D	E	F	G	H	I	J	K	L	M	O
12 R	12 R	12 R	12 R	12 R	12 R	◄R	◄R	12 R	12 R	DW	W/DW	W DW	
12 Y	◄Y 12 Y	12 Y	12 Y	12 Y	12 Y	◄Y	◄Y	12 Y	12 Y	W	CD		
12 G	◄G 12 G	12 G	12 G	◄G	◄G	◄G	◄FY	12 G	12 G			N: W CD DW	
		12 ◄G	12 Y				12 ◄G	12 G►	12 Y►				
			12 ◄G						12 G►				

LEGEND
- (7) POLE & NUMBER
- SIGNAL INDICATION
- PEDESTRIAN SIGNAL INDICATION
- PB PUSHBUTTON
- 00-00-PD LOOP DECTETOR
- DISTANCE FROM STOP LINE - AREA OF DETECTION - PRESENCE PR; PULSE P; DELAY D; NO DELAY ND; EXTENSION E
- CONTROLLER
- (M) METER
- VIDEO DET CAMERA

-* OPTICALLY PROGRAMMABLE

Intersection: 2nd Ave N & N 15th St ID #: 315

Crash Summary	**Trends**
1. Crash rate is above the statewide average (1.22 crashes/MEV). 2. 23 of the 75 crashes were injury crashes. There were two major injury crashes. 3. Failure to yield right of way making left turn (31%) was reported most frequently as the major cause (26 crashes indicated the surface condition was wet, ice, snow, or slush). 4. Two vehicles were reported as striking a fixed object: a pole (2) 5. Three crashes identified drivers being under the influence of alcohol. 6. 73% of the crashes occurred between 10 AM and 6 PM. 7. 40% of the drivers involved in the crashes were under the age of 30.	1. The intersection continues to experience between 5 and 10 crashes per year; exceptions were 2006 (4) and 2009 (11). 2. 31% of the crashes were broadside/right angle crashes. 22% each were rear-end and angle, oncoming left turn crashes. 20% of the crashes involved an eastbound/westbound through vehicle colliding with an opposing left turning vehicle. Sideswipe same direction accounted for an additional 14%.

Mitigation Options / Potential Improvements

1. Implement coordination timings will reduce the potential for rear-end collisions.
2. Convert S 15th St to three lanes, dedicated left turn lanes will reduce the potential for rear-end collisions. Some signal modifications may be necessary to maintain a signal head over each lane.
3. Align the east/west left turn lanes so the line up across from each other, this will improve the vision of drivers and reduce the potential for a collision between through and opposing left turning vehicles. Some signal modifications may be necessary to maintain a signal head over each lane.

Funding Potential

1. Beyond GO bonds, TSIP is a likely funding source. The three-lane conversion and alignment of left turn lanes may qualify for the "site specific" funding portion of TSIP. The signal modifications may qualify for "traffic control device" funding portion or be included with the conversion or alignment projects.

Cost Opinion

Intersection	Item	Period for Modification		
		Short-Term (0-2 Years)	Mid-Term (2-5 Years)	Long-Term (5-15 Years)
2nd Ave N & N 15th St	Convert S 15th St to 3 Lanes			#
	Revise Pavement Markings to align E/W Left Turn Lanes		* $8,000	
Total			* $8,000	#

#- See discussion on converting S 15th St to three lanes for cost opinion
*- Traffic signal modifications would be additional

Intersection Crash Summary

Location:	2nd Ave N & N 15th St		
City/County:	Fort Dodge, Webster County		
Time Period:	2004- May 2014	Crash Period =	10.5 years
Prepared by:	OMV		

NUMBER OF CRASHES

0	Fatal Crashes	0 fatalities	0 injuries
2	Major Injury Crashes		2 injuries
6	Minor Injury Crashes		8 injuries
15	Possible/Unknown Injury Crashes		18 injuries
51	Property Damage Only Crashes		
Totals: 74	Crashes	0 fatalities	28 injuries

CRASH RATES

Total Crash Rate =	74	/	60.73 MEV	=	1.22 Total Crashes/MEV
Fatal Crash Rate =	0	/	60.73 MEV	=	0.00 Fatal Crashes/MEV
Fatal/Injury Crash Rate =	23	/	60.73 MEV	=	0.38 F & I Crashes/MEV

CRASH FREQUENCY

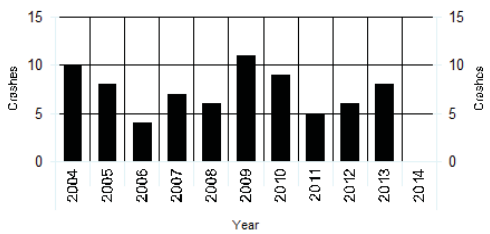

CRASH TYPE

				Non Vehicle Collision Type	
3	Head-on	10	Sideswipe, Same Direction	0	Pedestrian
16	Rear-end Crash	2	Sideswipe, Opposite Direction	0	Bicycle
23	Broadside/Right angle Crash	0	Parked	2	Fixed Object
17	Angle, Oncoming Left Turn	0	Other		
0	Backing	1	Unknown		

TRAFFIC - AADT

North Approach =	10500
South Approach =	10100
East Approach =	6600
West Approach =	4490
Million Entering Vehicles (MEV) =	60.73

Notes:
IDOT 2011 AADT

N 15th St and 2nd Ave N

2004 - 2014 Reportable Crashes

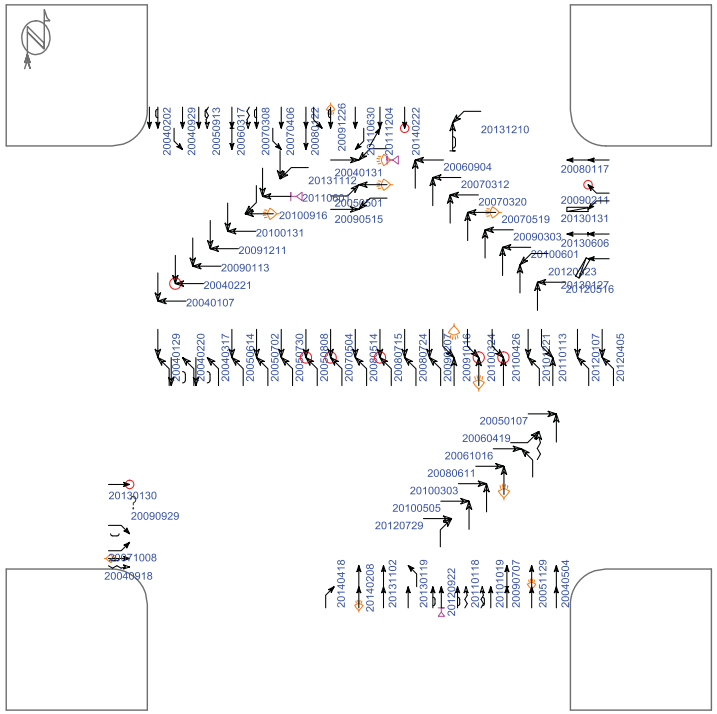

(1) crashes could not be placed in this schematic

Straight
Stopped
Unknown
Backing
Overtaking
Sideswipe

Parked
Erratic
Out of control
Right turn
Left turn
U-turn

Pedestrian
Bicycle
Injury
Fatality
Nighttime
DUI

Fixed objects:
General
Signal
Tree
Pole
Curb
Animal

3rd vehicle
Extra data

Pd' Programming, Inc. 07/11/2014

Iowa Department of Transportation

Major Cause Summary

N 15th St and 2nd Ave N

Report Version 1.1 Jan 2005

Analysis Years: 2004 [10], 2005 [8], 2006 [4], 2007 [7], 2008 [6], 2009 [11], 2010 [9], 2011 [5], 2012 [6], 2013 [8]

Crash Summary:

Fatal	-
Major Injury	2
Minor Injury	6
Possible/Unknown	15
PDO	51
Total Crashes	74

Injury Summary:

Fatal	-
Major Injury	2
Minor Injury	8
Possible	14
Unknown	4
Total Injuries	28

TOT Property Damage: $334,862

AVG Property Damage: $4,525

Surface Condition Summary:

Dry	48
Wet	11
Ice	3
Snow	10
Slush	2
Sand/Dirt/Oil/Gravel	-
Water	-
Other	-
Unknown	-
Not Reported	-
Total Crashes	74

Major Cause Summary:

	Animal		Improper Backing
9	Ran Traffic Signal		Illegally Parked/Unattended
	Ran Stop Sign	1	Swerving/Evasive Action
1	Crossed Centerline		Over-Correcting/Over-Steering
	FTYROW: At Uncontrolled Intersection		Downhill Runaway
1	FTYROW: Making Right Turn on Red Signal		Equipment Failure
	FTYROW: From Stop Sign		Separation of Units
	FTYROW: From Yield Sign		Ran Off Road - Right
23	FTYROW: Making Left Turn		Ran Off Road - Straight
4	FTYROW: From Driveway		Ran Off Road - Left
	FTYROW: From Parked Position	1	Lost Control
	FTYROW: To Pedestrian		Inattentive/Distracted By: Passenger
4	FTYROW: Other (explain in narrative)		Inattentive/Distracted By: Use of Phone or Other
	Traveling Wrong Way or on Wrong Side of Rd		Inattentive/Distracted By: Fallen Object
3	Driving Too Fast for Conditions	1	Inattentive/Distracted By: Fatigued/Asleep
	Exceeded Authorized Speed		Other: Vision Obstructed
2	Made Improper Turn		Oversized Load/ Oversized Vehicle
	Improper Lane Change		Cargo/Equipment Loss or Shift
6	Followed Too Close	9	Other: Other Improper Action
	Disregarded Railroad Signal	7	Unknown
	Disregarded Warning Sign	2	Other: No Improper Action
	Operating Vehicle in Reckless/Aggressive Manner		None Indicated

Selection Filter:

None

Analyst: OMV

Notes: Radius=150'

Iowa Department of Transportation

Driver and Time Summary

N 15th St and 2nd Ave N

Report Version 1.0 Aug 2006

Crash Time of Day Summary:

From / To	00:00 01:59	02:00 03:59	04:00 05:59	06:00 07:59	08:00 09:59	10:00 11:59	12:00 13:59	14:00 15:59	16:00 17:59	18:00 19:59	20:00 21:59	22:00 23:59	NR	Total	%
SUN	-	-	-	-	-	-	2	2	-	-	1	-	-	5	7
MON	-	-	-	1	-	-	-	4	1	1	-	-	-	7	9
TUE	-	-	-	1	3	5	1	1	5	-	1	-	-	17	23
WED	-	-	-	1	-	1	5	4	-	-	2	-	-	13	18
THU	-	-	-	-	-	1	-	5	2	-	2	-	-	10	14
FRI	-	-	-	-	2	-	2	1	3	1	-	1	-	10	14
SAT	-	-	-	-	-	2	-	3	4	-	3	-	-	12	16
Tot.				3	5	9	10	20	15	2	9	1		74	
%				4	7	12	14	27	20	3	12	1			100

Driver Age/Gender Summary:

Age	Male	Female	NR	Drivers	%
<14	-	-	-		
14	-	-	-		
15	-	-	-		
16	3	8	-	11	7
17	3	4	-	7	5
18	2	3	-	5	3
19	4	3	-	7	5
20	-	1	-	1	1
21 to 24	10	10	1	21	14
25 to 29	6	9	-	15	10
30 to 34	5	9	-	14	9
35 to 39	2	7	-	9	6
40 to 44	7	7	-	14	9
45 to 49	1	6	-	7	5
50 to 54	4	2	-	6	4
55 to 59	-	4	-	4	3
60 to 64	3	1	-	4	3
65 to 69	2	4	-	6	4
70 to 74	-	5	-	5	3
75 to 79	2	-	-	2	1
80 to 84	1	-	-	1	1
85 to 89	3	-	-	3	2
90 to 94	-	1	-	1	1
95 plus	-	-	-		
NR	-	-	6	6	4
Drivers	58	84	7	149	
%	39	56	5		100

Drug/Alcohol Summary:

	Total	%
Drug		
Alcohol, Less than Statutory		
Alcohol, Statutory	3	4
Drug/Alcohol, Less than Statutory		
Drug/Alcohol, Statutory		
Refused		
Under Influence of Alc/Drugs/Meds		
None Indicated	71	96
Total Crashes	74	100

Fixed Object Struck Summary:

	Vehs.	%
Bridge/Bridge rail/Overpass		
Underpass/Structure Support		
Culvert		
Ditch/Embankment		
Curb/Island/Raised Median		
Guardrail		
Concrete Barrier		
Tree		
Pole - Utility/Light/Etc	2	1
Sign Post		
Mailbox		
Impact Attenuator		
Other Fixed Object		
None	147	99
Total Vehicles	149	100

Selection Filter:

None

Analyst: OMV

Notes: Radius=150'

Intersection: 2nd Ave N & N 15th St ID#: 315

Lane Width	**Turn Lanes**
Approaching N/S: 11 ft E/W: 10 ft	Left turn lanes on E/W approaches (negative offset) No right turn lanes
Sidewalk/ADA Ramps	**Lighting**
Sidewalk ramps exist on the north side of the intersection. The south side has sidewalks, but no ramps. Only the NW corner has detectable warning panel. Crosswalk and sidewalk slopes may not meet ADA requirements.	Combination traffic signal and lighting poles exists in the SW and NE corners. Housings indicated 400 watt high pressure sodium fixtures.
Parking	**Access/Driveways**
No parking existing along both streets near the intersection	The SW and NE corners do not have defined driveways. The curbs are short enough to drive over, so the accesses to these gas stations are close to the intersection. The NW and SE corner have driveways located at least 125 ft from the intersection.
Miscellaneous	
1. The S-curve through the intersection brings the signal poles in close proximity to the traveled way in the SW and NE corners. In order to relocate curve or straighten the intersection, right-of-way would need to be purchased if not a full property acquisition.	

Cost Opinion

Intersection	Item	Period for Modification		
		Short-Term (0-2 Years)	Mid-Term (2-5 Years)	Long-Term (5-15 Years)
2nd Ave N & N 15th St	Construct ADA Ramps	$3,500		
	Relocate/Reconstruct S-curve			$750,000
Total		$3,500		$750,000

CLICK TO RETURN TO SIGNAL LOCATION MAP

6th Ave N & N 15th St ID#: 316

Intersection: 6th Ave N & N 15th St ID#: 316

Signal Evaluation	MUTCD Issues
1. Siemens Eagle M52 signal controller 2. No video detection. There is evidence of inductive loops in the pavement along 6th Ave N however there are no amplifiers within the cabinet. Signal is running pre-timed. 3. Cabinet has a fiber optic distribution panel (nothing connected to it) 4. Does not have battery back-up system	1. Pedestrian signal heads do not include countdown timers. 2. Pedestrian pushbutton signs have been damaged. 3. When replacing street name signs, signs on mast arms shall have 12", upper and lowercase lettering 4. The School Crossing sign (S1-1) should not have the crosswalk lines and not allowed at a traffic signal (stop controlled approach) 5. Update clearance (yellow and red) and pedestrian intervals to current standards of practice

Misc. Comments

1. City staff indicated there is a hard-wire connection along 15th St
2. Pushbuttons are damaged and should be replaced. One pushbutton is located underneath the signal cabinet on the SW pole; this is for the identified School Crossing.
3. No signal head backplates exists
4. Trim trees to improve visibility of the pedestrian head
5. Installation of detection at the intersection may reduce vehicular delay. Detection system should likely be video detection to be consistent with new traffic signal installations.

Budget Needs

Intersection	Item	Period for Modification		
		Short-Term (0-2 Years)	Mid-Term (2-5 Years)	Long-Term (5-15 Years)
6th Ave N & N 15th St	Remove School Crossing Sign	$100		
	Trim Trees for Pedestrian Head visibility	$500		
	Replace Pedestrian Pushbuttons and Signs	$2,400		
	Install Backplates on Signal Heads (backplates do not exist for current signal heads)	-		
	Replace Street Name Signs		$1,950	
	Implement Countdown Pedestrian Signals		$6,400	
	Install Video Detection		$35,000	
	Replace/Upgrade Controller Cabinet			$20,000
	Annual Maintenance	$800	$1,200	$4,000
Total		$3,800	$44,550	$24,000

SIGNAL EQUIPMENT DATA

INTERSECTION: 6th Ave N & N 15th St

DATE: 6/25/14

POWER: Underground

ZONE: 3

ID: 316

CONTROLLER:
BRAND: Eagle Traffic Control
MODEL: ATCNX EPAC3806

SOFTWARE VER: OS # 3.32g (OCT 03)

DETECTORS:
LOOP: None

VIDEO: None

PUSHBUTTONS: Yes

POLE DATA

POLE NO.	POLE TYPE	POLE MATL.	TYPE OF BASE	ARM LENGTH / PEDSTL. HEIGHT		REMARKS
1	3	2	2	26		Walk sign is blue, not easily seen
2	4	2	2	10		Missing push button sign
3	3	2	2	26		Push buttons in bad shap
4	1	2	2	26		

POLE TYPE
1. SINGLE MAST ARM
2. TWIN MAST ARM
3. COMBINATION
4. PEDESTAL
5. UTILITY
6. OTHER

POLE MATL.
1. ALUMINUM
2. STEEL
3. WOOD
4. OTHER

TYPE OF BASE
1. PLATE
2. STEEL TRANSFORMER
3. ALUM. TRANSFORMER

AUXILIARY EQUIPMENT

VIDEO: None

PRE-EMPTION: None

CONFLICT MONITOR: EDI MMU-16

BATTERY BACK-UP: None

DETECTOR AMP

COMMUNICATION: None

SIGNAL TIMING DATA

INTERSECTION: 6th Ave N & N 15th St

CONTROLLER: Eagle Traffic Controls ATCNX

DATE: 6/25/14 - Existing Timings

Basic Timing Data

	Ph1 -	Ph2 -	Ph3 -	Ph4 -	Ph5 -	Ph6 -	Ph7 -	Ph8 -
Min Grn	10	15	10	12	10	15	10	15
Passage	4.0	5.0	4.0	5.0	4.0	5.0	4.0	5.0
Max 1	25	35	25	20	25	35	25	35
Max 2	30	50	30	50	30	50	30	50
Yellow	4.0	4.0	4.0	4.0	4.0	4.0	4.0	4.0
Red Clr	1.0	1.0	1.0	1.0	1.0	1.0	1.0	1.0
Walk	0	7	0	7	0	7	0	7
Ped Clear	0	0	0	0	0	0	0	0
Recall		Min		Min		Min		
Lock/Non	Non	Non	Non	Non	Non	Non	Non	Non
Act/Non-Act		Non		Non		Non		Non

Coordination Plan Data

Dial 1/Split 1/2 Cycle: 55 Offset: 25

Phase	1	2	3	4	5	6	7	8
Time	0	35	0	20	0	0	0	0
Mode		Coord ph		Actuated				

Active Periods:

Dial 2/Split 1 Cycle: Offset:

Phase	1	2	3	4	5	6	7	8
Time								
Mode								

Active Periods:

Dial 3/Split 1 Cycle: Offset:

Phase	1	2	3	4	5	6	7	8
Time								
Mode								

Active Periods:

Phasing

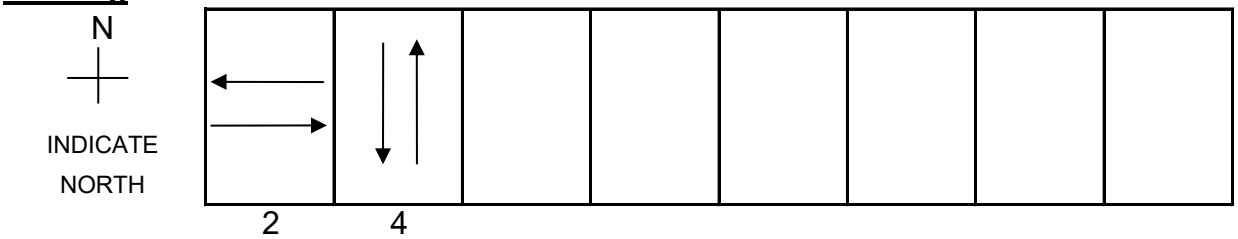

City of Fort Dodge 6th Ave N + N 15th St

Pic # 149 -177

316

SIGNAL LAYOUT:

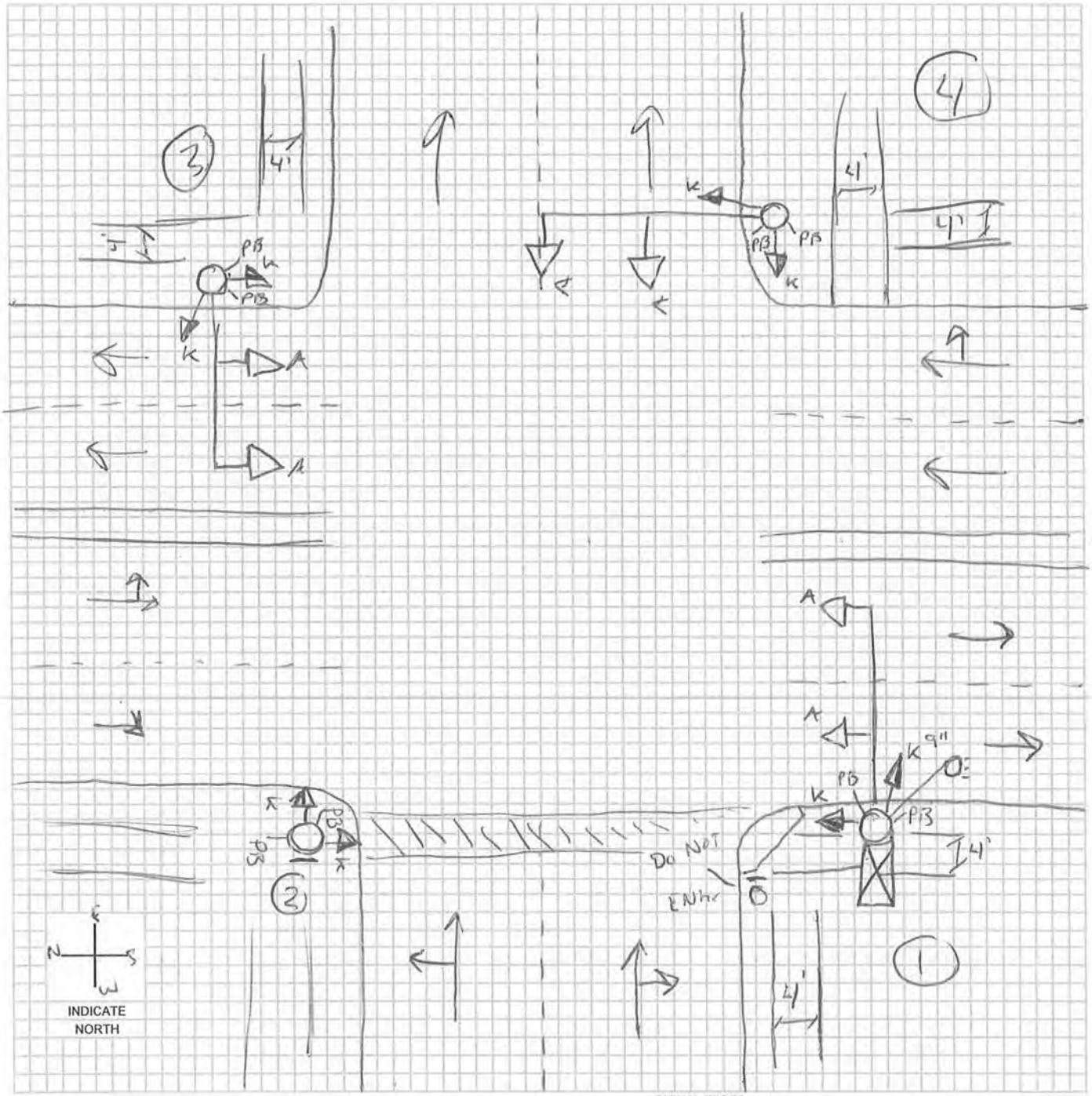

SIGNAL FACES

A	B	C	D	E	F	G	H	I	J	K	L	M	O
12 R	12 R	12 R	12 R	12 R	12 R	◄R	◄R	12 R	12 R	DW	W/DW	W DW	
12 Y	12 ◄Y / 12 Y	12 Y	12 Y	12 Y	12 ◄Y	12 ◄Y	12 ◄Y	12 Y	12 Y	W	CD		
12 G	12 ◄G / 12 G	12 G	12 G	◄G	12 ◄G	12 ◄G	12 ◄FY	12 G	12 G			N: W CD DW	
		12 ◄G	12 ◄Y				12 ◄G	12 G►	12 Y►				
			12 ◄G						12 G►				

LEGEND

- (7) POLE & NUMBER
- SIGNAL INDICATION
- PEDESTRIAN SIGNAL INDICATION
- PB PUSHBUTTON
- 00-00-PD LOOP DECTETOR
- DISTANCE FROM STOP LINE - AREA OF DETECTION - PRESENCE PR; PULSE P; DELAY D; NO DELAY ND; EXTENSION E
- CONTROLLER
- (M) METER
- VIDEO DET CAMERA

-* OPTICALLY PROGRAMMABLE

Intersection: 6th Ave N & N 15th St ID #: 316

Crash Summary	**Trends**
1. Crash rate is above the statewide average (1.26 crashes/MEV), highest crash rate in city 2. 11 of the 58 crashes were injury crashes. There was one major injury crash. 3. Ran traffic signal (45%) was reported most frequently as the major cause (20 crashes indicated the surface condition was wet, ice, snow, or slush). 4. Two vehicles were reported as striking a fixed object: a pole (1) and other (1) 5. 64% of the crashes occurred between 10 AM and 6 PM. 10% occurred between 8 PM and 10 PM. 6. 29% of the drivers involved in the crashes were under the age of 30. 28% were over the age of 60. 7. Two crashes indicated a driver attempted to turn the wrong way on to 6th Ave N	1. The intersection continues to experience between 4 and 9 crashes per year; 6 crashes per year average. 2. 64% of the crashes were broadside/right angle crashes; nearly equal between eastbound vehicles colliding with northbound or southbound vehicles.

Mitigation Options / Potential Improvements

1. Implement coordination timings will reduce the potential for rear-end collisions and drivers running the traffic signal.
2. If problems with traffic turning wrong direction on to 6th Ave N, could install No Right Turn (R3-1) and No Left Turn (R3-2) signs on the respective mast arms.
3. Convert S 15th St to three lanes, dedicated left turn lanes will reduce the potential for rear-end collisions. Some signal modifications may be necessary to maintain a signal head over each lane.

Funding Potential

1. Beyond GO bonds, TSIP is a likely funding source. The three-lane conversion and alignment of left turn lanes may qualify for the "site specific" funding portion of TSIP. The signal modifications may qualify for "traffic control device" funding portion or be included with the conversion or alignment projects.

Cost Opinion

Intersection	Item	Period for Modification		
		Short-Term (0-2 Years)	Mid-Term (2-5 Years)	Long-Term (5-15 Years)
6th Ave N & N 15th St	Convert S 15th St to 3 Lanes			#
	Install No Turn Signs (N/S)	$500		
Total		$500		#

#- See discussion on converting S 15th St to three lanes for cost opinion

Intersection Crash Summary

Location: 6th Ave N & N 15th St
City/County: Fort Dodge, Webster County
Time Period: 2004- May 2014 Crash Period = 10.5 years
Prepared by: OMV

NUMBER OF CRASHES

0	Fatal Crashes	0 fatalities	0 injuries
1	Major Injury Crashes		2 injuries
3	Minor Injury Crashes		4 injuries
7	Possible/Unknown Injury Crashes		12 injuries
47	Property Damage Only Crashes		
Totals: 58	Crashes	0 fatalities	18 injuries

CRASH RATES

Total Crash Rate =	58	/	45.99 MEV	=	1.26 Total Crashes/MEV
Fatal Crash Rate =	0	/	45.99 MEV	=	0.00 Fatal Crashes/MEV
Fatal/Injury Crash Rate =	11	/	45.99 MEV	=	0.24 F & I Crashes/MEV

CRASH FREQUENCY

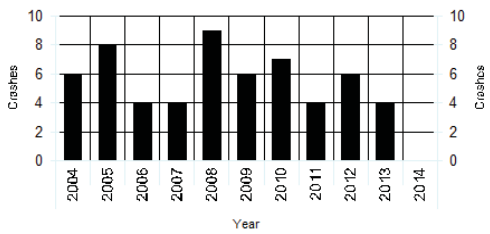

CRASH TYPE

1 Head-on	5 Sideswipe, Same Direction	Non Vehicle Collision Type	
8 Rear-end Crash	0 Sideswipe, Opposite Direction	0 Pedestrian	
37 Broadside/Right angle Crash	0 Parked	0 Bicycle	
4 Angle, Oncoming Left Turn	0 Other	2 Fixed Object	
0 Backing	1 Unknown		

TRAFFIC - AADT

North Approach =	9500
South Approach =	9500
East Approach =	0
West Approach =	2500
Million Entering Vehicles (MEV) =	45.99

Notes:
xxxxxxx

N 15th St and 6th Ave N

2004 - 2014 Reportable Crashes

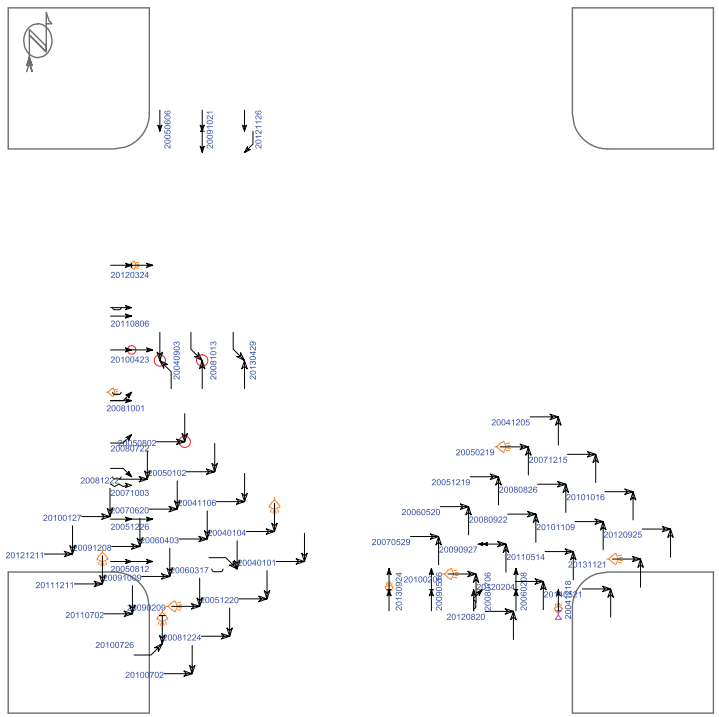

(1) crashes could not be placed in this schematic

Straight, Stopped, Unknown, Backing, Overtaking, Sideswipe, Parked, Erratic, Out of control, Right turn, Left turn, U-turn, Pedestrian, Bicycle, Injury, Fatality, Nighttime, DUI, Fixed objects: General, Signal, Tree, Pole, Curb, Animal, 3rd vehicle, Extra data

Pd' Programming, Inc. 07/11/2014

Iowa Department of Transportation

Major Cause Summary

N 15th St and 6th Ave N

Report Version 1.1 Jan 2005

Analysis Years: 2004 [6], 2005 [8], 2006 [4], 2007 [4], 2008 [9], 2009 [6], 2010 [7], 2011 [4], 2012 [6], 2013 [4]

Crash Summary:

Fatal	-
Major Injury	1
Minor Injury	3
Possible/Unknown	7
PDO	47
Total Crashes	58

Injury Summary:

Fatal	-
Major Injury	2
Minor Injury	4
Possible	11
Unknown	1
Total Injuries	18

TOT Property Damage: $311,315

AVG Property Damage: $5,368

Surface Condition Summary:

Dry	37
Wet	11
Ice	3
Snow	5
Slush	1
Sand/Dirt/Oil/Gravel	1
Water	-
Other	-
Unknown	-
Not Reported	-
Total Crashes	58

Major Cause Summary:

1	Animal		Improper Backing
26	Ran Traffic Signal		Illegally Parked/Unattended
	Ran Stop Sign	1	Swerving/Evasive Action
	Crossed Centerline		Over-Correcting/Over-Steering
	FTYROW: At Uncontrolled Intersection		Downhill Runaway
	FTYROW: Making Right Turn on Red Signal		Equipment Failure
	FTYROW: From Stop Sign		Separation of Units
	FTYROW: From Yield Sign	1	Ran Off Road - Right
1	FTYROW: Making Left Turn		Ran Off Road - Straight
	FTYROW: From Driveway		Ran Off Road - Left
	FTYROW: From Parked Position	2	Lost Control
	FTYROW: To Pedestrian	1	Inattentive/Distracted By: Passenger
2	FTYROW: Other (explain in narrative)		Inattentive/Distracted By: Use of Phone or Other
	Traveling Wrong Way or on Wrong Side of Rd		Inattentive/Distracted By: Fallen Object
2	Driving Too Fast for Conditions		Inattentive/Distracted By: Fatigued/Asleep
	Exceeded Authorized Speed		Other: Vision Obstructed
2	Made Improper Turn		Oversized Load/ Oversized Vehicle
	Improper Lane Change		Cargo/Equipment Loss or Shift
2	Followed Too Close	8	Other: Other Improper Action
	Disregarded Railroad Signal	7	Unknown
	Disregarded Warning Sign	2	Other: No Improper Action
	Operating Vehicle in Reckless/Aggressive Manner		None Indicated

Selection Filter:

None

Analyst: OMV

Notes: Radius=100'

Iowa Department of Transportation

Driver and Time Summary

N 15th St and 6th Ave N

Report Version 1.0 Aug 2006

Crash Time of Day Summary:

From	00:00	02:00	04:00	06:00	08:00	10:00	12:00	14:00	16:00	18:00	20:00	22:00			
To	01:59	03:59	05:59	07:59	09:59	11:59	13:59	15:59	17:59	19:59	21:59	23:59	NR	Total	%
SUN	-	-	-	-	-	-	2	2	-	1	1	-	-	6	10
MON	-	-	-	-	1	2	2	4	1	-	1	1	-	12	21
TUE	-	-	-	-	1	2	3	1	2	-	1	1	-	11	19
WED	-	-	-	-	1	2	1	2	-	-	1	-	-	7	12
THU	-	-	-	-	-	1	-	-	-	-	1	-	-	2	3
FRI	-	-	-	1	2	1	1	1	-	-	-	-	-	6	10
SAT	1	-	-	1	1	3	2	1	1	1	1	2	-	14	24
Tot.	1			2	6	11	11	11	4	2	6	4		58	
%	2			3	10	19	19	19	7	3	10	7			100

Driver Age/Gender Summary:

Age	Male	Female	NR	Drivers	%
<14	-	-	-		
14	-	-	-		
15	1	-	-	1	1
16	3	7	-	10	9
17	2	-	-	2	2
18	3	1	-	4	3
19	2	3	-	5	4
20	1	-	-	1	1
21 to 24	2	4	-	6	5
25 to 29	2	3	-	5	4
30 to 34	4	6	-	10	9
35 to 39	5	1	-	6	5
40 to 44	4	6	-	10	9
45 to 49	3	4	-	7	6
50 to 54	6	2	-	8	7
55 to 59	6	2	-	8	7
60 to 64	5	6	-	11	9
65 to 69	1	-	1	2	2
70 to 74	4	2	-	6	5
75 to 79	1	6	-	7	6
80 to 84	4	2	-	6	5
85 to 89	-	1	-	1	1
90 to 94	-	-	-		
95 plus	-	-	-		
NR	-	-	1	1	1
Drivers	59	56	2	117	
%	50	48	2		100

Drug/Alcohol Summary:

	Total	%
Drug		
Alcohol, Less than Statutory		
Alcohol, Statutory	1	2
Drug/Alcohol, Less than Statutory		
Drug/Alcohol, Statutory		
Refused		
Under Influence of Alc/Drugs/Meds		
None Indicated	57	98
Total Crashes	58	100

Fixed Object Struck Summary:

	Vehs.	%
Bridge/Bridge rail/Overpass		
Underpass/Structure Support		
Culvert		
Ditch/Embankment		
Curb/Island/Raised Median		
Guardrail		
Concrete Barrier		
Tree		
Pole - Utility/Light/Etc	1	1
Sign Post		
Mailbox		
Impact Attenuator		
Other Fixed Object	1	1
None	115	98
Total Vehicles	117	100

Selection Filter:

None

Analyst: OMV

Notes: Radius=100'

Intersection: 6th Ave N & N 15th St ID#: 316

Lane Width	**Turn Lanes**
Approaching N/S: 11 ft W: 10 ft	No left turn lanes Right turn lane on W approach
Sidewalk/ADA Ramps	**Lighting**
Sidewalks exist on both sides to each approach to the intersection. However, there are no sidewalk ramps to the crossings.	Combination traffic signal and lighting poles exists in the SW and NE corners. Housings indicated 400 watt high pressure sodium fixtures.
Parking	**Access/Driveways**
No parking existing along both streets near the intersection. Parking is allowed on the south side of 6th Ave N outside of the intersection area.	The NW corner does not have defined driveways. The curbs are short enough to drive over, so the accesses to this property are close to the intersection. The remaining corners have driveways located at 60 ft from the intersection; these driveways are to residential properties.
Miscellaneous	
1. 6th Ave N is a one-way street eastbound. 2. To gain additional clear zone between the traveled way and the signal poles, right-of-way will need to be acquired. One option to gain more distance would be to remove one approach lane along 6th Ave N.	

Cost Opinion

Intersection	Item	Period for Modification		
		Short-Term (0-2 Years)	Mid-Term (2-5 Years)	Long-Term (5-15 Years)
6th Ave N & N 15th St	Sidewalk Improvements	$2,000		
	Construct ADA Ramps	$3,500		
Total		$5,500		

CLICK TO RETURN TO SIGNAL LOCATION MAP

7th Ave N & N 15th St ID#: 317

Intersection: 7th Ave N & N 15th St ID#: 317

Signal Evaluation	MUTCD Issues
1. Siemens Eagle M42 signal controller 2. No video detection. There is no evidence of inductive loops in the pavement along 7th Ave N. Signal is running pre-timed. 3. Cabinet has a fiber optic distribution panel (nothing connected to it) 4. Does not have battery back-up system	1. Pedestrian signal heads do not include countdown timers. 2. When replacing street name signs, signs on mast arms shall have 12", upper and lowercase lettering 3. The School Crossing sign (S1-1) should not have the crosswalk lines and not allowed at a traffic signal (stop controlled approach) 4. Do Not Enter Sign is faded 5. Update clearance (yellow and red) and pedestrian intervals to current standards of practice

Misc. Comments

1. City staff indicated there is a hard-wire connection along 15th St
2. Pushbuttons are damaged and should be replaced. One pushbutton is located underneath the signal cabinet on the SW pole; this is for the identified School Crossing.
3. No signal head backplates exists
4. Installation of detection at the intersection may reduce vehicular delay. Detection system should likely be video detection to be consistent with new traffic signal installations.

Budget Needs

Intersection	Item	Period for Modification		
		Short-Term (0-2 Years)	Mid-Term (2-5 Years)	Long-Term (5-15 Years)
7th Ave N & N 15th St	Remove School Crossing Signs	$100		
	Replace Pedestrian Pushbuttons and Signs	$2,400		
	Replace Damaged/Faded Signs	$2,500		
	Install Backplates on Signal Heads (backplates do not exist for current signal heads)	-		
	Replace Street Name Signs		$1,950	
	Implement Countdown Pedestrian Signals		$6,400	
	Install Video Detection		$35,000	
	Replace/Upgrade Controller and Cabinet			$20,000
	Annual Maintenance	$800	$1,200	$4,000
Total		$5,800	$44,550	$24,000

SIGNAL EQUIPMENT DATA

INTERSECTION: 7th Ave N & N 15th St

DATE: 6/25/14

POWER: UNDERGROUND

ZONE: 3

ADDRESS:

ID: 317

CONTROLLER:
BRAND:Eagle Traffic Control Systems
MODEL: EPAC 3808 M42

SOFTWARE VER:

DETECTORS:
LOOP: N/A

VIDEO: N/A

PUSHBUTTONS: 8

POLE DATA

POLE NO.	POLE TYPE	POLE MATL.	TYPE OF BASE	ARM LENGTH / PEDSTL. HEIGHT		REMARKS
1	3	2	2	26		PUSH BUTTONS IN BAD SHAPE
2	1	2	2	26		PUSH BUTTONS IN BAD SHAPE
3	3	2	2	26		MISSING SIGN FOR PUSH BUTTON
4	4	2	2	10		BENT PUSH BUTTON SIGN, DO NOT ENTER SIGN VERY FADED

POLE TYPE
1. SINGLE MAST ARM
2. TWIN MAST ARM
3. COMBINATION
4. PEDESTAL
5. UTILITY
6. OTHER

POLE MATL.
1. ALUMINUM
2. STEEL
3. WOOD
4. OTHER

TYPE OF BASE
1. PLATE
2. STEEL TRANSFORMER
3. ALUM. TRANSFORMER

AUXILIARY EQUIPMENT

VIDEO: NONE

PRE-EMPTION

CONFLICT MONITOR: EDI MMU-16E

BATTERY BACK-UP: NONE

DETECTOR AMP: NONE

COMMUNICATION: NONE

SIGNAL TIMING DATA

INTERSECTION: 7th Ave N & N 15th St

CONTROLLER: Eagle Traffic Control Systems EPAC 3808M42

DATE: 6/25/14 - Existing Timings

Basic Timing Data

	Ph1 -	Ph2 - EW	Ph3 -	Ph4 - NS	Ph5 -	Ph6 -	Ph7 -	Ph8 -
Min Grn	10	15	10	12	10	15	10	15
Passage	4.0	5.0	4.0	5.0	4.0	5.0	4.0	5.0
Max 1	25	30	25	30	25	35	25	35
Max 2	30	50	30	50	30	50	30	50
Yellow	4.0	4.0	4.0	4.0	4.0	4.0	4.0	4.0
Red Clr	1.0	1.0	1.0	1.0	1.0	1.0	1.0	1.0
Walk	0	8	0	5	0	7	0	7
Ped Clear	0	15	0	10	0	8	0	8
Recall								
Lock/Non	NON	NON	NON	NON	NON	NON	NON	NON
Act/Non-Act		NON		NON		NON		NON

Coordination Plan Data

Dial 1/Split 1/2 Cycle: 55 Offset: 27

Phase	1	2	3	4	5	6	7	8
Time		35		20				
Mode		Coord Ph		Actuated				

Active Periods:

Dial 2/Split 1 Cycle: Offset:

Phase	1	2	3	4	5	6	7	8
Time								
Mode								

Active Periods:

Dial 3/Split 1 Cycle: Offset:

Phase	1	2	3	4	5	6	7	8
Time								
Mode								

Active Periods:

Phasing

N

INDICATE NORTH

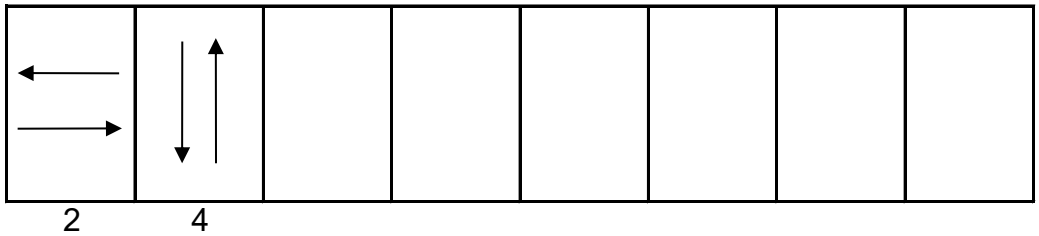

City of Fort Dodge

7 Ave N th + N 15th St

317

SIGNAL LAYOUT:

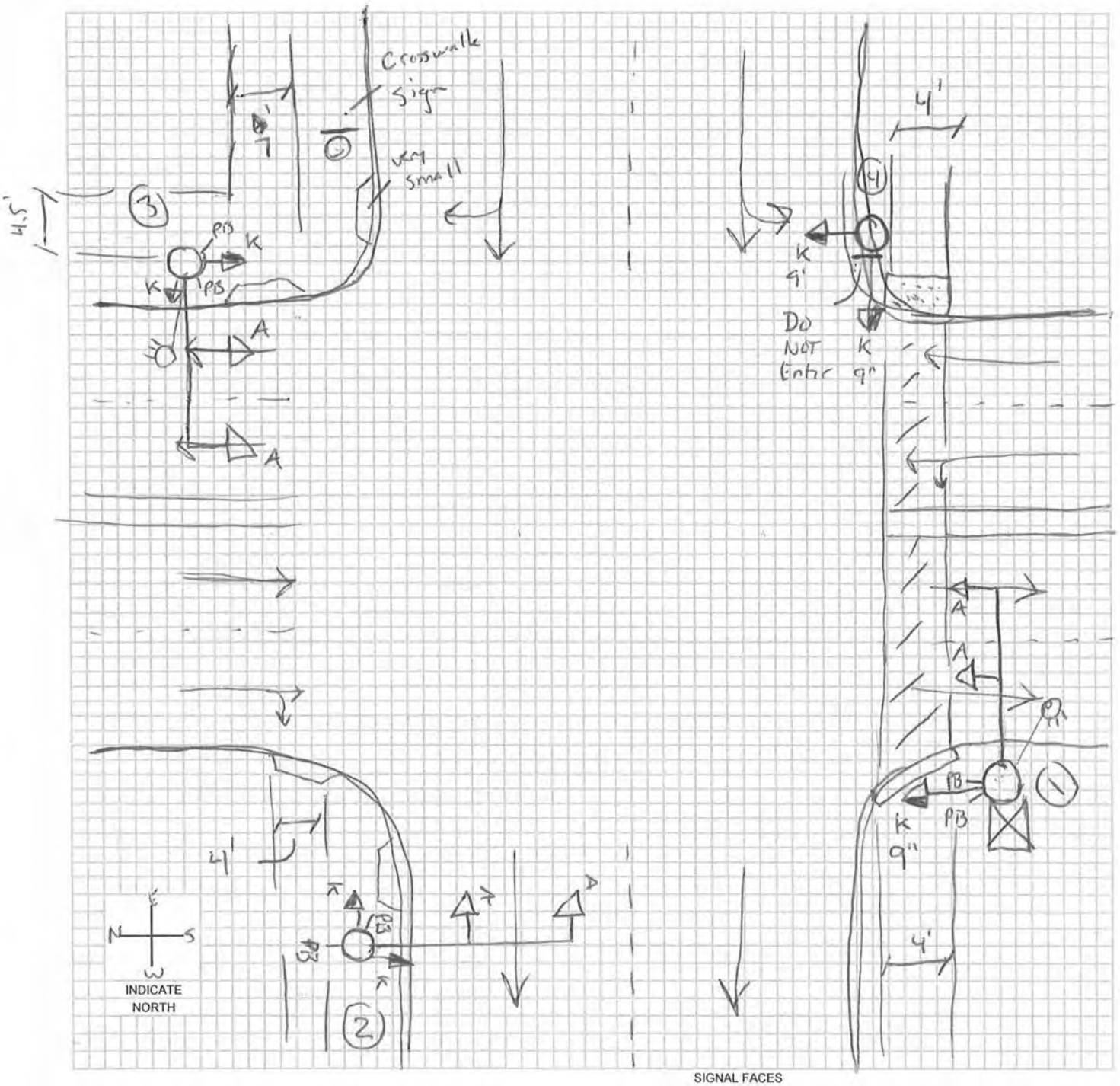

LEGEND

- (7) POLE & NUMBER
- SIGNAL INDICATION
- PEDESTRIAN SIGNAL INDICATION
- PB PUSHBUTTON
- 00-00-PD LOOP DECTETOR
- DISTANCE FROM STOP LINE - AREA OF DETECTION - PRESENCE PR; PULSE P; DELAY D; NO DELAY ND; EXTENSION E
- CONTROLLER
- (M) METER
- VIDEO DET CAMERA

SIGNAL FACES

A	B	C	D	E	F	G	H	I	J	K	L	M	O
12 R	12 R	12 R	12 R	12 R	12 R	◄R	◄R	12 R	12 R	DW	W/DW	W DW	
12 Y	12 ◄Y / 12 Y	12 Y	12 Y	12 Y	12 ◄Y	12 ◄Y	12 ◄Y	12 Y	12 Y	W	CD		
12 G	12 ◄G / 12 G	12 G	12 G	12 ◄G	12 ◄G	12 ◄G	12 ◄FY	12 G	12 G			N: W CD DW	
		12 ◄G	12 ◄Y				12 ◄G	12 G►	12 Y►				
			12 ◄G						12 G►				

-* OPTICALLY PROGRAMMABLE

Intersection: 7th Ave N & N 15th St ID #: 317

Crash Summary	**Trends**
1. Crash rate is at the statewide average (0.93 crashes/MEV). 2. 19 of the 48 crashes were injury crashes. There was one fatal crash. A school bus driver (age 75) struck a pedestrian (age 77) while turning left from 7th Ave N in 2005. 3. Ran traffic signal (21%) was reported most frequently as the major cause; 17 indicated other or unknown cause, including the fatal crash (13 crashes indicated the surface condition was wet, ice, snow, or slush). 4. Two vehicles were reported as striking a fixed object: a pole (1) and other (1) 5. 75% of the crashes occurred between 10 AM and 6 PM. 6. 35% of the drivers involved in the crashes were under the age of 30. 19% were over the age of 60.	1. 2004 and 2005 experienced 17 crashes in those 2 years. Since then, there has been a gradual decrease in crashes to 4 occurring in 2013. 2006, 2008, 2011, and 2012 were years that experienced 3 or fewer crashes. 2. 40% of the crashes were broadside/right angle crashes 3. Most were between eastbound and northbound vehicles.

Mitigation Options / Potential Improvements

1. Implement coordination timings will reduce the potential for rear-end collisions and drivers running the traffic signal.
2. If problems with traffic turning wrong direction on to 7th Ave N, could install No Right Turn (R3-1) and No Left Turn (R3-2) signs on the respective mast arms.
3. Convert S 15th St to three lanes, dedicated left turn lanes will reduce the potential for rear-end collisions. Some signal modifications may be necessary to maintain a signal head over each lane.

Funding Potential

1. Beyond GO bonds, TSIP is a likely funding source. The three-lane conversion and alignment of left turn lanes may qualify for the "site specific" funding portion of TSIP. The signal modifications may qualify for "traffic control device" funding portion or be included with the conversion or alignment projects.

Cost Opinion

Intersection	Item	Period for Modification		
		Short-Term (0-2 Years)	Mid-Term (2-5 Years)	Long-Term (5-15 Years)
7th Ave N & N 15th St	Convert S 15th St to 3 Lanes			#
	Install No Turn Signs (N/S)	$500		
Total		$500		#

#- See discussion on converting S 15th St to three lanes for cost opinion

Intersection Crash Summary

Location: 7th Ave N & N 15th St
City/County: Fort Dodge, Webster County
Time Period: 2004- May 2014 Crash Period = 10.5 years
Prepared by: OMV

NUMBER OF CRASHES

1	Fatal Crashes	1 fatalities	1 injuries
0	Major Injury Crashes		0 injuries
3	Minor Injury Crashes		4 injuries
15	Possible/Unknown Injury Crashes		20 injuries
29	Property Damage Only Crashes		
Totals: 48	Crashes	1 fatalities	25 injuries

CRASH RATES

Total Crash Rate =	48	/	51.74 MEV	=	0.93 Total Crashes/MEV
Fatal Crash Rate =	1	/	51.74 MEV	=	0.02 Fatal Crashes/MEV
Fatal/Injury Crash Rate =	19	/	51.74 MEV	=	0.37 F & I Crashes/MEV

CRASH FREQUENCY

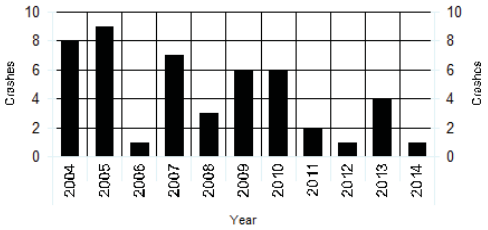

CRASH TYPE

1	Head-on	7	Sideswipe, Same Direction	Non Vehicle Collision Type	
15	Rear-end Crash	1	Sideswipe, Opposite Direction	0	Pedestrian
19	Broadside/Right angle Crash	0	Parked	0	Bicycle
0	Angle, Oncoming Left Turn	0	Other	2	Fixed Object
0	Backing	0	Unknown	3	No Object Reported

TRAFFIC - AADT

North Approach =	9500
South Approach =	9500
East Approach =	4000
West Approach =	0
Million Entering Vehicles (MEV) =	51.74

Notes:
xxxxxxx

N 15th and 7th Ave N

2004 - 2014 Reportable Crashes

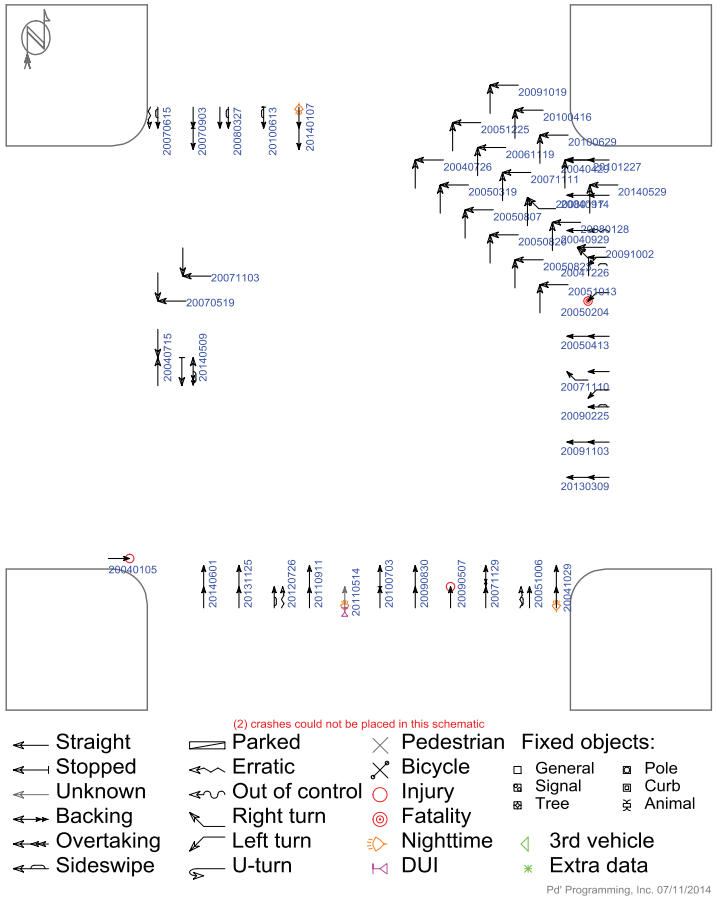

(2) crashes could not be placed in this schematic

Straight
Stopped
Unknown
Backing
Overtaking
Sideswipe
Parked
Erratic
Out of control
Right turn
Left turn
U-turn
Pedestrian
Bicycle
Injury
Fatality
Nighttime
DUI
Fixed objects:
General
Signal
Tree
Pole
Curb
Animal
3rd vehicle
Extra data

Pd' Programming, Inc. 07/11/2014

Iowa Department of Transportation

Major Cause Summary

N 15th St and 7th Ave N

Report Version 1.1 Jan 2005

Analysis Years: 2004 [8], 2005 [9], 2006 [1], 2007 [7], 2008 [3], 2009 [6], 2010 [6], 2011 [2], 2012 [1], 2013 [4], 2014 [1]

Crash Summary:

Fatal	1
Major Injury	-
Minor Injury	3
Possible/Unknown	15
PDO	29
Total Crashes	48

Injury Summary:

Fatal	1
Major Injury	-
Minor Injury	4
Possible	19
Unknown	1
Total Injuries	25

TOT Property Damage: $183,675

AVG Property Damage: $3,827

Surface Condition Summary:

Dry	35
Wet	10
Ice	1
Snow	2
Slush	-
Sand/Dirt/Oil/Gravel	-
Water	-
Other	-
Unknown	-
Not Reported	-
Total Crashes	48

Major Cause Summary:

	Animal		Improper Backing
10	Ran Traffic Signal		Illegally Parked/Unattended
	Ran Stop Sign	2	Swerving/Evasive Action
1	Crossed Centerline		Over-Correcting/Over-Steering
	FTYROW: At Uncontrolled Intersection		Downhill Runaway
	FTYROW: Making Right Turn on Red Signal	1	Equipment Failure
	FTYROW: From Stop Sign		Separation of Units
	FTYROW: From Yield Sign		Ran Off Road - Right
1	FTYROW: Making Left Turn		Ran Off Road - Straight
	FTYROW: From Driveway		Ran Off Road - Left
	FTYROW: From Parked Position		Lost Control
	FTYROW: To Pedestrian	1	Inattentive/Distracted By: Passenger
3	FTYROW: Other (explain in narrative)	1	Inattentive/Distracted By: Use of Phone or Other
	Traveling Wrong Way or on Wrong Side of Rd		Inattentive/Distracted By: Fallen Object
2	Driving Too Fast for Conditions		Inattentive/Distracted By: Fatigued/Asleep
	Exceeded Authorized Speed		Other: Vision Obstructed
2	Made Improper Turn		Oversized Load/ Oversized Vehicle
	Improper Lane Change		Cargo/Equipment Loss or Shift
7	Followed Too Close	11	Other: Other Improper Action
	Disregarded Railroad Signal	4	Unknown
	Disregarded Warning Sign	2	Other: No Improper Action
	Operating Vehicle in Reckless/Aggressive Manner		None Indicated

Selection Filter:

None

Analyst: OMV

Notes: Radius=100'

Iowa Department of Transportation

Driver and Time Summary

N 15th St and 7th Ave N

Report Version 1.0 Aug 2006

Crash Time of Day Summary:

From / To	00:00 01:59	02:00 03:59	04:00 05:59	06:00 07:59	08:00 09:59	10:00 11:59	12:00 13:59	14:00 15:59	16:00 17:59	18:00 19:59	20:00 21:59	22:00 23:59	NR	Total	%
SUN	1	-	-	1	-	1	4	-	1	1	-	-	-	9	19
MON	-	-	-	-	-	2	1	1	2	1	-	-	-	7	15
TUE	-	-	-	-	-	-	-	2	2	-	-	1	-	5	10
WED	-	-	-	-	-	-	1	1	1	-	-	-	-	3	6
THU	-	-	-	1	1	1	-	3	3	-	-	-	-	9	19
FRI	-	-	-	-	1	-	-	2	1	1	-	-	-	5	10
SAT	1	-	-	-	-	2	2	2	1	1	-	1	-	10	21
Tot.	2			2	2	6	8	11	11	4		2		48	
%	4			4	4	12	17	23	23	8		4			100

Driver Age/Gender Summary:

Age	Male	Female	NR	Drivers	%
<14	-	-	-		
14	-	-	-		
15	-	1	-	1	1
16	6	2	-	8	8
17	1	2	-	3	3
18	1	-	-	1	1
19	3	1	-	4	4
20	3	-	-	3	3
21 to 24	4	8	-	12	13
25 to 29	1	1	-	2	2
30 to 34	5	8	-	13	14
35 to 39	3	2	-	5	5
40 to 44	1	4	-	5	5
45 to 49	3	2	-	5	5
50 to 54	4	2	-	6	6
55 to 59	4	2	-	6	6
60 to 64	4	1	-	5	5
65 to 69	-	2	-	2	2
70 to 74	1	2	-	3	3
75 to 79	2	4	-	6	6
80 to 84	3	-	-	3	3
85 to 89	-	-	-		
90 to 94	-	-	-		
95 plus	-	-	-		
NR	1	-	1	2	2
Drivers	50	44	1	95	
%	53	46	1		100

Drug/Alcohol Summary:

	Total	%
Drug		
Alcohol, Less than Statutory		
Alcohol, Statutory	2	4
Drug/Alcohol, Less than Statutory		
Drug/Alcohol, Statutory		
Refused		
Under Influence of Alc/Drugs/Meds		
None Indicated	46	96
Total Crashes	48	100

Fixed Object Struck Summary:

	Vehs.	%
Bridge/Bridge rail/Overpass		
Underpass/Structure Support		
Culvert		
Ditch/Embankment		
Curb/Island/Raised Median		
Guardrail		
Concrete Barrier		
Tree		
Pole - Utility/Light/Etc	1	1
Sign Post		
Mailbox		
Impact Attenuator		
Other Fixed Object	1	1
None	93	98
Total Vehicles	95	100

Selection Filter:

None

Analyst: OMV

Notes: Radius=100'

Intersection: 7th Ave N & N 15th St ID#: 317

Lane Width	**Turn Lanes**
Approaching N/S: 11 ft E: 12 ft	No left turn lanes No right turn lanes
Sidewalk/ADA Ramps	**Lighting**
Sidewalk ramps exist on each corner of the intersection. However, only the SE corner ramps have detectable warning panels. Each pair of ramps on every corner surround storm water intakes.	Combination traffic signal and lighting poles exists in the SW and NE corners. Housings indicated 400 watt high pressure sodium fixtures.
Parking	**Access/Driveways**
No parking existing along both streets near the intersection.	The SW corner does not have defined driveways. The curbs are short enough to drive over, so the accesses to this property are close to the intersection. The remaining corners have driveways located at 50+ ft from the intersection; these driveways are to residential properties.
Miscellaneous	
1. 7th Ave N is a one-way street westbound. 2. To gain additional clear zone between the traveled way and the signal poles, right-of-way will need to be acquired.	

Cost Opinion

Intersection	Item	Period for Modification		
		Short-Term	Mid-Term	Long-Term
		(0-2 Years)	(2-5 Years)	(5-15 Years)
7th Ave N & N 15th St	Sidewalk Improvements	$2,000		
	Construct ADA Ramps	$3,500		
Total		$5,500		

CLICK TO RETURN TO SIGNAL LOCATION MAP

20th Ave N & N 15th St ID#: 318

Intersection: 20th Ave N & N 15th St ID#: 318

Signal Evaluation	MUTCD Issues
1. Econolite ASC/3-2100 signal controller 2. Autoscope Terra video detection 3. Cabinet has a fiber optic distribution panel (nothing connected to it) 4. Does have battery back-up system 5. Has pedestal poles for pushbuttons for both pedestrian and bicyclists. SW & NE pedestal poles have pedestrian signal heads.	1. When replacing street name signs, signs on mast arms shall have 12", upper and lowercase lettering
Misc. Comments	
1. The pedestal pole in the NE corner for bicyclists has been tipped, straighten pole.	

Budget Needs

Intersection	Item	Period for Modification		
		Short-Term (0-2 Years)	Mid-Term (2-5 Years)	Long-Term (5-15 Years)
20th Ave N & N 15th St	Replace Tipped Pedestal Pole		$1,000	
	Replace Street Name Signs		$2,600	
	Implement Flashing Yellow Arrows			$30,000
	Annual Maintenance	$800	$1,200	$4,000
Total		$800	$4,800	$34,000

SIGNAL EQUIPMENT DATA

INTERSECTION: 20th Ave N & N 15th St
DATE: 6/24/14
POWER: Underground
ZONE: 3
ADDRESS: NONE
ID: 318

CONTROLLER
BRAND: Econolite
MODEL: ASC/ 3-2100
SOFTWARE VER: Application 02.49.00
Configuration: N-3100

DETECTORS
LOOP: NONE
VIDEO: Autoscope Tera Interface
PUSHBUTTONS: Yes

POLE DATA

POLE NO.	POLE TYPE	POLE MATL.	TYPE OF BASE	ARM LENGTH / PEDSTL. HEIGHT		REMARKS
1	4	2	4	12		Base is plastic
2	3	2	2	40		
3	3	2	2	40		
4	3	2	2	28		
5	4	2	4	12		
6	3	2	2	28		

POLE TYPE
1. SINGLE MAST ARM
2. TWIN MAST ARM
3. COMBINATION
4. PEDESTAL
5. UTILITY
6. OTHER

POLE MATL.
1. ALUMINUM
2. STEEL
3. WOOD
4. OTHER

TYPE OF BASE
1. PLATE
2. STEEL TRANSFORMER
3. ALUM. TRANSFORMER

AUXILIARY EQUIPMENT

VIDEO: Autoscope Tera Interface
PRE-EMPTION: NONE
CONFLICT MONITOR: Reno MMU-1600
BATTERY BACK-UP:
Techpower Development ME-XL 1000
DETECTOR AMP: Autoscope Tera Video
2 batteries
COMMUNICATION: NONE

SIGNAL TIMING DATA

INTERSECTION: 20th Ave N & N 15th St

CONTROLLER:

DATE: 6/24/14 - Existing Timings

Basic Timing Data

	Ph1- NBL	Ph2 - SB	Ph3 -	Ph4 -	Ph5 -	Ph6 -	Ph7 -	Ph8 -
Min Grn	5	15		10		15		10
Passage	3.0	7.0		5.0		7.0		5.0
Max 1	15	45		35		45		35
Max 2	15	45		35		45		35
Yellow	3.0	3.6		3.0		3.6		3.0
Red Clr	0.0	2.0		2.5		2.0		2.5
Walk		7		7		7		7
Ped Clear		20		18		20		18
Recall		X				X		
Lock/Non								
Act/Non-Act								

Coordination Plan Data

NONE

Dial 1/Split 1 Cycle: Offset:

Phase	1	2	3	4	5	6	7	8
Time								
Mode								

Active Periods:

Dial 2/Split 1 Cycle: Offset:

Phase	1	2	3	4	5	6	7	8
Time								
Mode								

Active Periods:

Dial 3/Split 1 Cycle: Offset:

Phase	1	2	3	4	5	6	7	8
Time								
Mode								

Active Periods:

Phasing

N

INDICATE NORTH

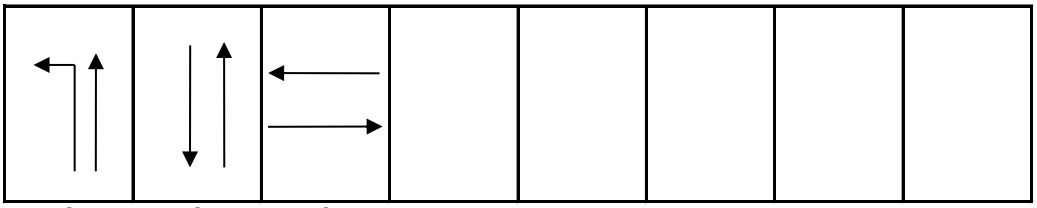

1 & 6 2 & 6 4 & 8

N 15th and 20 Ave North

City of Fort Dodge

318

SIGNAL LAYOUT:

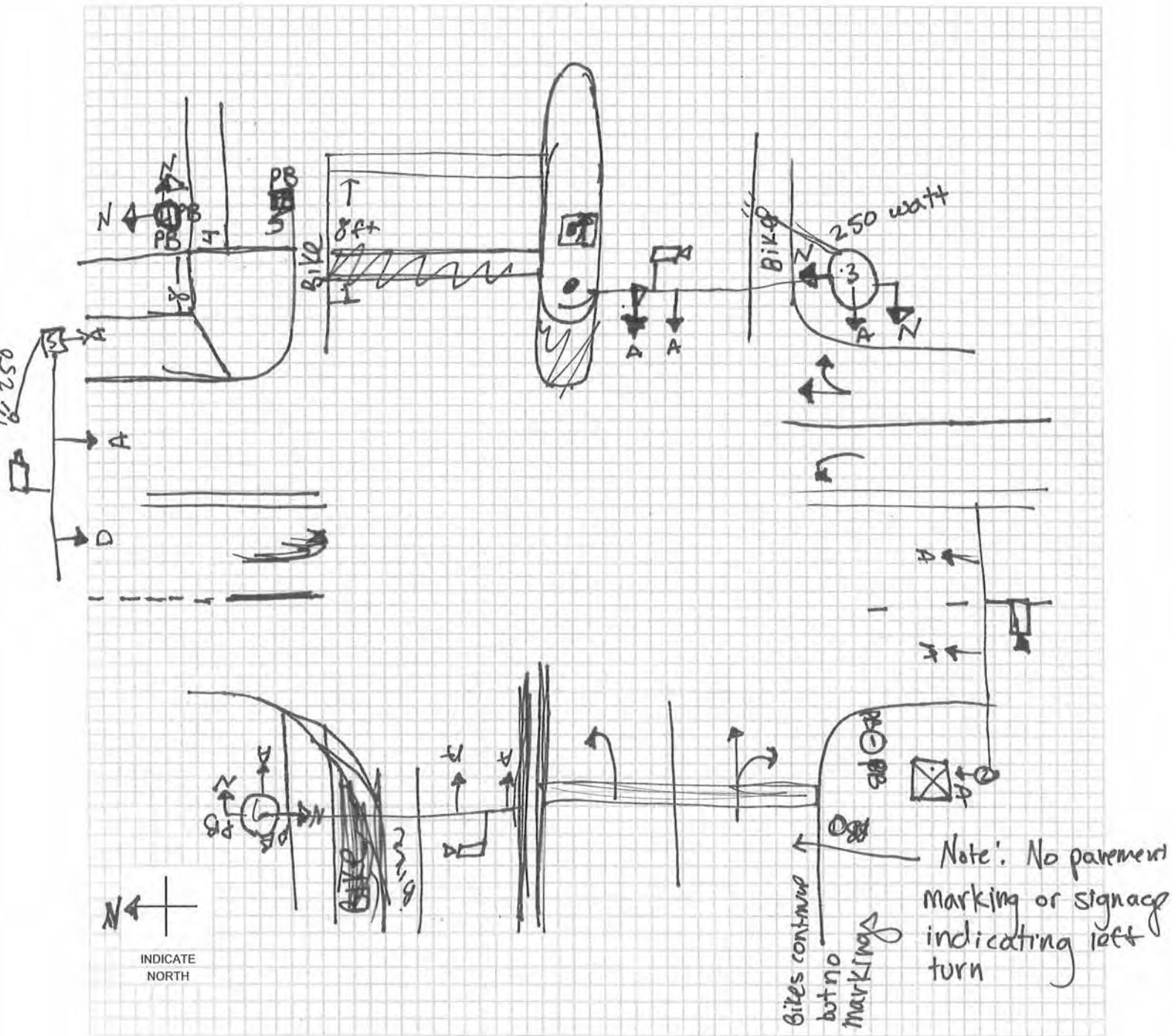

SIGNAL FACES

A	B	C	D	E	F	G	H	I	J	K	L	M	O
12 R	12 R	12 R	12 R	12 R	12 R	12 ◄R	12 ◄R	12 R	12 R	DW	W/DW	W DW	
12 Y	12 ◄Y / 12 Y	12 Y	12 Y	12 Y	12 ◄Y	12 ◄Y	12 ◄Y	12 Y	12 Y	W	CD		
12 G	12 ◄G / 12 G	12 G	12 G	12 ◄G	12 ◄G	12 ◄G	12 ◄FY	12 G	12 G			N: W CD DW	
		12 ◄G	12 ◄Y				12 ◄G	12 G►	12 Y►				
			12 ◄G						12 G►				

LEGEND

- (7) POLE & NUMBER
- SIGNAL INDICATION
- PEDESTRIAN SIGNAL INDICATION
- PB PUSHBUTTON
- 00-00-PD LOOP DECTETOR
- DISTANCE FROM STOP LINE - AREA OF DETECTION - PRESENCE PR; PULSE P; DELAY D; NO DELAY ND; EXTENSION E
- CONTROLLER
- (M) METER
- VIDEO DET CAMERA

-* OPTICALLY PROGRAMMABLE

Intersection: 20th Ave N & N 15th St ID #: 318

Crash Summary	**Trends**
1. Crash rate is below the statewide average (0.51 crashes/MEV). 2. 2 of the 21 crashes were injury crashes. The most severe was possible injury crash. 3. Failure to yield right-of-way making left turn (29%) was reported most frequently as the major cause (8 crashes indicated the surface condition was wet, ice, snow, or slush). 4. No fixed objects were struck. 5. 52% of the crashes occurred between 12 PM and 6 PM. 6. 34% of the drivers involved in the crashes were under the age of 30.	1. The intersection averages 2 crashes per year. Since 2007, there have only been a total of 8 crashes. 2. 71% of the crashes were rear-end, angle, oncoming left turn, or broadside/right angle crashes 3. Most involved northbound and/or southbound vehicles.
Mitigation Options / Potential Improvements	
1. Aligning N/S left turn lanes may reduce the potential for crashes involving left turning vehicles and give those drivers better visibility of oncoming through traffic.	
Funding Potential	
1. This intersection alone may not qualify for TSIP funding. However, it could be if included with converting 15th St to 3 lanes.	

Cost Opinion

Intersection	Item	Period for Modification		
		Short-Term (0-2 Years)	Mid-Term (2-5 Years)	Long-Term (5-15 Years)
20th Ave N & N 15th St	Convert S 15th St to 3 Lanes			#
	Revise Pavement Markings to align E/W Left Turn Lanes		* $8,000	
Total			* $8,000	#

#- See discussion on converting S 15th St to three lanes for cost opinion
*- Traffic signal modifications would be additional

Intersection Crash Summary

Location: 20th Ave N & N 15th St
City/County: Fort Dodge, Webster County
Time Period: 2004-May 2014 Crash Period = 10.5 years
Prepared by: OMV

NUMBER OF CRASHES

0	Fatal Crashes	0 fatalities	0 injuries
0	Major Injury Crashes		0 injuries
0	Minor Injury Crashes		0 injuries
2	Possible/Unknown Injury Crashes		2 injuries
19	Property Damage Only Crashes		
Totals: 21	Crashes	0 fatalities	2 injuries

CRASH RATES

Total Crash Rate =	21	/	41.20 MEV	=	0.51 Total Crashes/MEV
Fatal Crash Rate =	0	/	41.20 MEV	=	0.00 Fatal Crashes/MEV
Fatal/Injury Crash Rate =	2	/	41.20 MEV	=	0.05 F & I Crashes/MEV

CRASH FREQUENCY

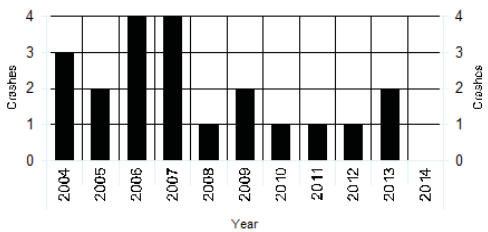

CRASH TYPE

2 Head-on	2 Sideswipe, Same Direction	Non Vehicle Collision Type
6 Rear-end Crash	1 Sideswipe, Opposite Direction	0 Pedestrian
4 Broadside/Right angle Crash	0 Parked	0 Bicycle
5 Angle, Oncoming Left Turn	0 Other	0 Fixed Object
0 Backing	0 Unknown	1 No Object Reported

TRAFFIC - AADT

North Approach =	8500
South Approach =	8500
East Approach =	1500
West Approach =	3000
Million Entering Vehicles (MEV) =	41.20

Notes:
xxxxxxx

N 15th St and 20th Ave N

2004 - 2014 Reportable Crashes

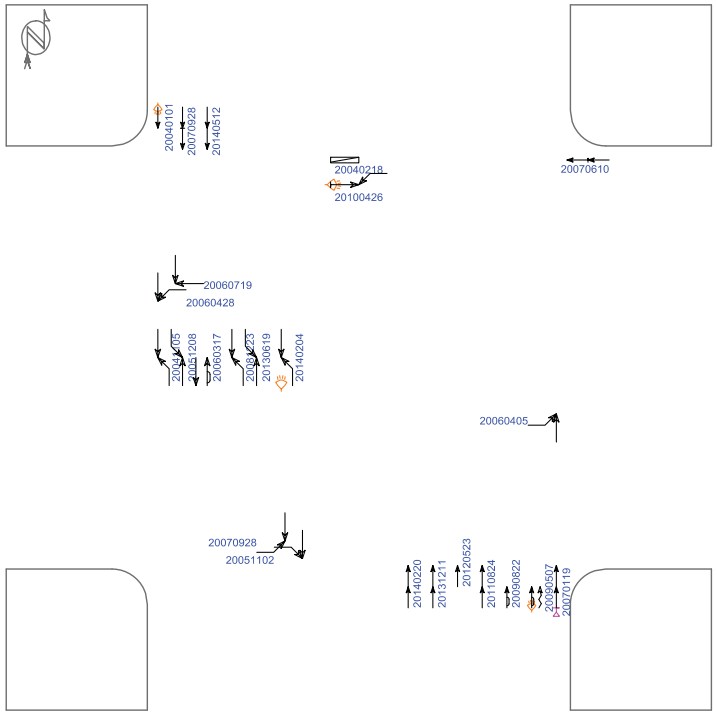

(0) crashes could not be placed in this schematic

Straight
Stopped
Unknown
Backing
Overtaking
Sideswipe

Parked
Erratic
Out of control
Right turn
Left turn
U-turn

Pedestrian
Bicycle
Injury
Fatality
Nighttime
DUI

Fixed objects:
General
Signal
Tree
Pole
Curb
Animal

3rd vehicle
Extra data

Pd' Programming, Inc. 07/11/2014

Iowa Department of Transportation

Major Cause Summary

N 15th St and 20th Ave N

Report Version 1.1 Jan 2005

Analysis Years: 2004 [3], 2005 [2], 2006 [4], 2007 [4], 2008 [1], 2009 [2], 2010 [1], 2011 [1], 2012 [1], 2013 [2]

Crash Summary:

Fatal	-
Major Injury	-
Minor Injury	-
Possible/Unknown	2
PDO	19
Total Crashes	21

Injury Summary:

Fatal	-
Major Injury	-
Minor Injury	-
Possible	1
Unknown	1
Total Injuries	2

TOT Property Damage: $96,000

AVG Property Damage: $4,571

Surface Condition Summary:

Dry	13
Wet	4
Ice	1
Snow	2
Slush	1
Sand/Dirt/Oil/Gravel	-
Water	-
Other	-
Unknown	-
Not Reported	-
Total Crashes	21

Major Cause Summary:

1	Animal		Improper Backing
2	Ran Traffic Signal		Illegally Parked/Unattended
	Ran Stop Sign	1	Swerving/Evasive Action
	Crossed Centerline		Over-Correcting/Over-Steering
	FTYROW: At Uncontrolled Intersection		Downhill Runaway
	FTYROW: Making Right Turn on Red Signal		Equipment Failure
	FTYROW: From Stop Sign		Separation of Units
	FTYROW: From Yield Sign		Ran Off Road - Right
6	FTYROW: Making Left Turn		Ran Off Road - Straight
	FTYROW: From Driveway		Ran Off Road - Left
	FTYROW: From Parked Position	1	Lost Control
	FTYROW: To Pedestrian		Inattentive/Distracted By: Passenger
2	FTYROW: Other (explain in narrative)		Inattentive/Distracted By: Use of Phone or Other
	Traveling Wrong Way or on Wrong Side of Rd		Inattentive/Distracted By: Fallen Object
1	Driving Too Fast for Conditions		Inattentive/Distracted By: Fatigued/Asleep
	Exceeded Authorized Speed		Other: Vision Obstructed
1	Made Improper Turn		Oversized Load/ Oversized Vehicle
	Improper Lane Change		Cargo/Equipment Loss or Shift
1	Followed Too Close	5	Other: Other Improper Action
	Disregarded Railroad Signal		Unknown
	Disregarded Warning Sign		Other: No Improper Action
	Operating Vehicle in Reckless/Aggressive Manner		None Indicated

Selection Filter:

None

Analyst: OMV

Notes: Radius=150'

Iowa Department of Transportation

Driver and Time Summary

N 15th St and 20th Ave N

Report Version 1.0 Aug 2006

Crash Time of Day Summary:

From / To	00:00 01:59	02:00 03:59	04:00 05:59	06:00 07:59	08:00 09:59	10:00 11:59	12:00 13:59	14:00 15:59	16:00 17:59	18:00 19:59	20:00 21:59	22:00 23:59	NR	Total	%
SUN	-	-	-	-	-	-	1	-	-	-	-	-	-	1	5
MON	-	-	-	-	-	-	-	-	-	-	1	-	-	1	5
TUE	-	-	-	-	1	-	-	-	-	-	-	-	-	1	5
WED	-	-	-	1	1	-	-	1	4	-	1	-	-	8	38
THU	-	-	-	1	-	-	-	-	-	-	2	-	-	3	14
FRI	-	-	-	2	-	-	2	-	2	-	-	-	-	6	29
SAT	-	-	-	-	-	-	-	1	-	-	-	-	-	1	5
Tot.				4	2		3	2	6		4			21	
%				19	10		14	10	29		19				100

Driver Age/Gender Summary:

Age	Male	Female	NR	Drivers	%
<14	-	-	-		
14	-	1	-	1	2
15	1	-	-	1	2
16	1	-	-	1	2
17	1	-	-	1	2
18	-	1	-	1	2
19	2	-	-	2	5
20	-	-	-		
21 to 24	2	1	-	3	7
25 to 29	3	1	-	4	10
30 to 34	-	-	-		
35 to 39	2	3	-	5	12
40 to 44	-	-	-		
45 to 49	2	-	-	2	5
50 to 54	6	3	-	9	22
55 to 59	3	3	-	6	15
60 to 64	-	1	-	1	2
65 to 69	1	-	-	1	2
70 to 74	1	1	-	2	5
75 to 79	-	-	-		
80 to 84	-	-	-		
85 to 89	-	-	-		
90 to 94	-	1	-	1	2
95 plus	-	-	-		
NR	-	-	-		
Drivers	25	16	0	41	
%	61	39	0		100

Drug/Alcohol Summary:

	Total	%
Drug		
Alcohol, Less than Statutory		
Alcohol, Statutory	1	5
Drug/Alcohol, Less than Statutory		
Drug/Alcohol, Statutory		
Refused		
Under Influence of Alc/Drugs/Meds		
None Indicated	20	95
Total Crashes	21	100

Fixed Object Struck Summary:

	Vehs.	%
Bridge/Bridge rail/Overpass		
Underpass/Structure Support		
Culvert		
Ditch/Embankment		
Curb/Island/Raised Median		
Guardrail		
Concrete Barrier		
Tree		
Pole - Utility/Light/Etc		
Sign Post		
Mailbox		
Impact Attenuator		
Other Fixed Object		
None	41	100
Total Vehicles	41	100

Selection Filter:

None

Analyst: OMV

Notes: Radius=150'

Intersection: 20th Ave N & N 15th St ID#: 318

Lane Width	**Turn Lanes**
Approaching N/S: 12 ft E/W: 12 ft	Left turn lanes on N/S approaches (ends a through lane northbound) Two approach lanes E/W, but no designation
Sidewalk/ADA Ramps	**Lighting**
Sidewalks exist along the north side of 20th Ave N, both sides of the intersection. A trail exists in the NE corner along N 15th St and continues north. No other trail/sidewalk exists at the intersection. Only the ramp in the NE corner has detectable warning panels. The sidewalk in the NW corner does not have a ramp.	Combination traffic signal and lighting poles exists in all corners. There is an additional street light fixture located on the utility pole in the SE corner of the intersection. Housings indicated 250 watt high pressure sodium fixtures.
Parking	**Access/Driveways**
No parking existing along both streets near the intersection. Parking is allowed along 20th Ave N adjacent to the residential homes.	Commercial driveways exist on all but the south approach. The nearest driveway is 110 ft from the intersection. The nearest restaurant or gas station driveway is 150 ft from the intersection.
Miscellaneous	
1. Consider installing lane designation signing (R3-5) for E/W approaches	

Cost Opinion

Intersection	Item	Period for Modification		
		Short-Term (0-2 Years)	Mid-Term (2-5 Years)	Long-Term (5-15 Years)
20th Ave N & N 15th St	Construct ADA Ramps	$500		
	Install Lane Designation Signs (E/W Approaches)	$1,000		
	Construct Sidewalks to Pushbuttons	$1,500		
Total		$3,000		

CLICK TO RETURN TO SIGNAL LOCATION MAP

1st Ave S & S 25th St ID#: 419

Intersection: 1st Ave S & S 25th St ID#: 419

Signal Evaluation	MUTCD Issues
1. Siemens Eagle M10 signal controller 2. Inductive loop detection with Sarasota card rack amplifiers 3. Each approach has protected only left turn phasing 4. Does not have any communication equipment 5. Does have battery back-up system	1. The advance lane control signs do not have MUTCD approved symbols 2. When replacing street name signs, signs on mast arms shall have 12", upper and lowercase lettering

Misc. Comments
1. The traffic signal is being replaced as a part of East Region Phase 2 project. All equipment and materials is being replaced, including the control cabinet, poles, signal heads, and signing. Communication conduit will be installed to connect to 1st Ave S & S 29th St as well as 5th Ave S & S 25th St. Construction scheduled to occur in 2015.

Budget Needs

Intersection	Item	Period for Modification		
		Short-Term (0-2 Years)	Mid-Term (2-5 Years)	Long-Term (5-15 Years)
1st Ave S & S 25th St	To be replaced in 2016 - East Region Project			
	Annual Maintenance	$800	$1,200	$4,000
Total		$800	$1,200	$4,000

SIGNAL EQUIPMENT DATA

INTERSECTION: 1st Ave S & S 25th St

DATE: 6/26/14

POWER: Underground

ZONE: 4

ID: 419

CONTROLLER:
BRAND: Genesis
MODEL: EPAC3108M10

SOFTWARE VER: OS # 2.34k (JUN 1998)

DETECTORS:
LOOP: Sarasota Detector 222TGPS

VIDEO: None

PUSHBUTTONS: None

POLE DATA

POLE NO.	POLE TYPE	POLE MATL.	TYPE OF BASE	ARM LENGTH / PEDSTL. HEIGHT		REMARKS
1	1	2	2	20		All poles older, but in good condition
2	1	2	2	20		All poles older, but in good condition
3	1	2	2	20		All poles older, but in good condition
4	1	2	2	20		All poles older, but in good condition

POLE TYPE
1. SINGLE MAST ARM
2. TWIN MAST ARM
3. COMBINATION
4. PEDESTAL
5. UTILITY
6. OTHER

POLE MATL.
1. ALUMINUM
2. STEEL
3. WOOD
4. OTHER

TYPE OF BASE
1. PLATE
2. STEEL TRANSFORMER
3. ALUM. TRANSFORMER

AUXILIARY EQUIPMENT

VIDEO: None

PRE-EMPTION

CONFLICT MONITOR: EDI 6029686407

BATTERY BACK-UP: Alpha Model FXM1100
with 4 batteries

DETECTOR AMP: Sarasota Detector 222TGPS

Also had Alpha Guard Battery Management System
Model: AG-CUT-4sc

COMMUNICATION: None

SIGNAL TIMING DATA

INTERSECTION: 1st Ave S & S 25th St
CONTROLLER: Genesis EPAC 3000
DATE: 6/26/14 - Existing Timings

Basic Timing Data

	Ph1 -NBL	Ph2 -NB	Ph3 -WBL	Ph4 -EB	Ph5 -SBL	Ph6 -SB	Ph7 -EBL	Ph8 -WB
Min Grn	5	5	5	5	5	5	5	5
Passage	3.0	3.0	3.0	3.0	3.0	3.0	3.0	3.0
Max 1	25	35	25	120	45	35	25	50
Max 2	30	50	30	50	30	50	30	50
Yellow	3.0	3.2	3.0	3.2	3.0	3.2	3.0	3.2
Red Clr	1.0	1.5	1.0	1.5	1.0	1.5	1.0	1.5
Walk	0	0	0	0	0	0	0	0
Ped Clear	0	0	0	0	0	0	0	0
Recall				Soft				Soft
Lock/Non	Yes	Yes	Yes	Yes	Yes	Yes	Yes	Yes
Act/Non-Act								

*Non-actuated response=None

Coordination Plan Data

Dial 1/Split 1 Cycle: 100 Offset: 0

Phase	1	2	3	4	5	6	7	8
Time	15	26	14	45	22	19	10	49
Mode	0	0	0	1	0	0	0	1

Active Periods:

Dial 2/Split 1 Cycle: Offset:

Phase	1	2	3	4	5	6	7	8
Time								
Mode								

Active Periods:

Dial 3/Split 1 Cycle: Offset:

Phase	1	2	3	4	5	6	7	8
Time								
Mode								

Active Periods:

Phasing

N

INDICATE NORTH

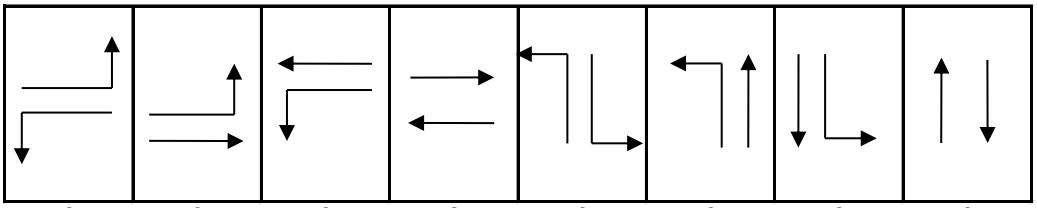

3 & 7 | 3 & 8 | 4 & 7 | 4 & 8 | 1 & 5 | 1 & 2 | 5 & 6 | 2 & 6

1st Ave S + S 25th St

SIGNAL LAYOUT:

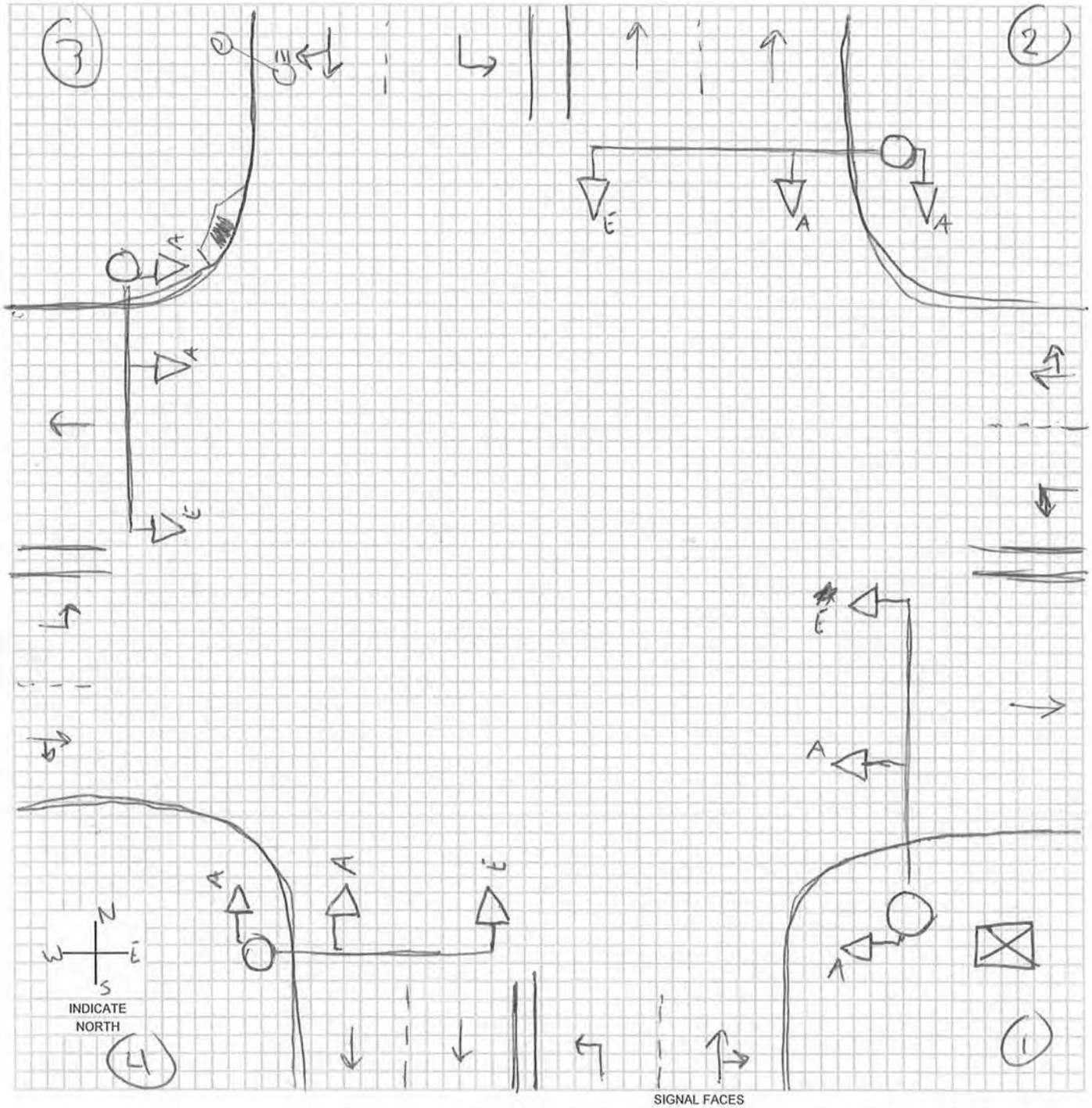

SIGNAL FACES

A	B	C	D	E	F	G	H	I	J	K	L	M	O
12 R	12 R	12 R	12 R	12 R	12 R	12 ◄R	12 ◄R	12 R	12 R	DW	W/DW	W DW	
12 Y	12 ◄Y / 12 Y	12 Y	12 Y	12 Y	12 ◄Y	12 ◄Y	12 ◄Y	12 Y	12 Y	W	CD		
12 G	12 ◄G / 12 G	12 G	12 G	12 ◄G	12 ◄G	12 ◄G	12 ◄FY	12 G	12 G			N: W CD DW	
		12 ◄G	12 ◄Y				12 ◄G	12 G►	12 Y►				
			12 ◄G						12 G►				

LEGEND

- (7) POLE & NUMBER
- SIGNAL INDICATION
- PEDESTRIAN SIGNAL INDICATION
- PB PUSHBUTTON
- 00-00-PD LOOP DECTETOR
- DISTANCE FROM STOP LINE - AREA OF DETECTION - PRESENCE PR; PULSE P; DELAY D; NO DELAY ND; EXTENSION E
- CONTROLLER
- (M) METER
- VIDEO DET CAMERA

-* OPTICALLY PROGRAMMABLE

Intersection: 1st Ave S & S 25th St ID#: 419

Crash Summary	**Trends**
1. Crash rate is below the statewide average (0.69 crashes/MEV). 2. 7 of the 32 crashes were injury crashes. There was one major injury crash. 3. Ran traffic signal (16%) was reported most frequently as the major cause (10 crashes indicated the surface condition was wet, ice, snow, or slush). 4. Two vehicles were reported as striking a fixed object: a pole (2) 5. 72% of the crashes occurred between 12 PM and 6 PM, 33% occurred from 12 PM to 2 PM 6. 27% of the drivers involved in the crashes were under the age of 30.	1. The intersection averages 4 crashes per year. 2012 and 2013 experienced a total of 4 crashes. 2. 51% of the crashes were rear-end crashes 3. Vehicles from all directions were equally represented.
Mitigation Options / Potential Improvements	
1. The intersection is being reconstructed as a part of the East Region Phase 2 project. Construction is scheduled for 2015. Improvements include new traffic signal and adding right turn lanes to all approaches. These should reduce the potential for crashes.	
Funding Potential	
1. This intersection received TSIP funding in 2014.	

Cost Opinion

Intersection	Item	Period for Modification		
		Short-Term (0-2 Years)	Mid-Term (2-5 Years)	Long-Term (5-15 Years)
1st Ave S & S 25th St	None			
Total				

Intersection Crash Summary

Location:	1st Ave S & S 25th St		
City/County:	Fort Dodge, Webster County		
Time Period:	2004- May 2014	Crash Period =	10.5 years
Prepared by:	OMV		

NUMBER OF CRASHES

0	Fatal Crashes	0 fatalities	0 injuries
1	Major Injury Crashes		1 injuries
1	Minor Injury Crashes		1 injuries
5	Possible/Unknown Injury Crashes		11 injuries
32	Property Damage Only Crashes		
Totals: 39	Crashes	0 fatalities	13 injuries

CRASH RATES

Total Crash Rate =	39	/	56.36 MEV	=	0.69 Total Crashes/MEV
Fatal Crash Rate =	0	/	56.36 MEV	=	0.00 Fatal Crashes/MEV
Fatal/Injury Crash Rate =	7	/	56.36 MEV	=	0.12 F & I Crashes/MEV

CRASH FREQUENCY

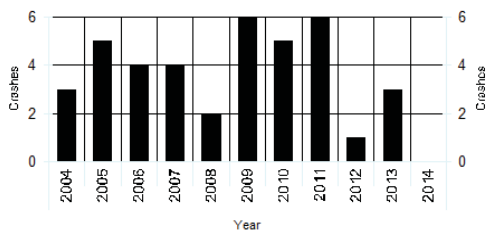

CRASH TYPE

0 Head-on	6 Sideswipe, Same Direction	Non Vehicle Collision Type	
20 Rear-end Crash	1 Sideswipe, Opposite Direction	0 Pedestrian	
8 Broadside/Right angle Crash	0 Parked	0 Bicycle	
2 Angle, Oncoming Left Turn	0 Other	1 Fixed Object	
0 Backing	1 Unknown		

TRAFFIC - AADT

North Approach =	3810
South Approach =	6700
East Approach =	9400
West Approach =	9500
Million Entering Vehicles (MEV) =	56.36

Notes:
IDOT 2011 AADT

S 25th St and 1st Ave S

2004 - 2014 Reportable Crashes

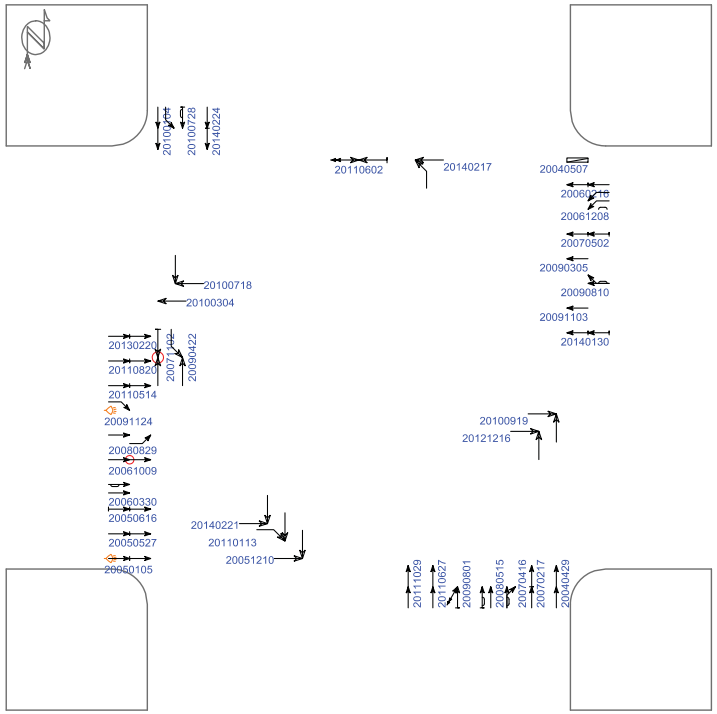

(2) crashes could not be placed in this schematic

Straight
Stopped
Unknown
Backing
Overtaking
Sideswipe

Parked
Erratic
Out of control
Right turn
Left turn
U-turn

Pedestrian
Bicycle
Injury
Fatality
Nighttime
DUI

Fixed objects:
General
Signal
Tree
Pole
Curb
Animal

3rd vehicle
Extra data

Pd' Programming, Inc. 07/10/2014

Iowa Department of Transportation

Major Cause Summary

S 25th St and 1st Ave S

Report Version 1.1 Jan 2005

Analysis Years: 2004 [3], 2005 [5], 2006 [4], 2007 [4], 2008 [2], 2009 [6], 2010 [5], 2011 [6], 2012 [1], 2013 [3]

Crash Summary:

Fatal	-
Major Injury	1
Minor Injury	1
Possible/Unknown	5
PDO	32
Total Crashes	39

Injury Summary:

Fatal	-
Major Injury	1
Minor Injury	1
Possible	11
Unknown	-
Total Injuries	13

TOT Property Damage: $160,145

AVG Property Damage: $4,106

Surface Condition Summary:

Dry	28
Wet	5
Ice	2
Snow	2
Slush	1
Sand/Dirt/Oil/Gravel	-
Water	-
Other	-
Unknown	-
Not Reported	1
Total Crashes	39

Major Cause Summary:

	Animal		Improper Backing
5	Ran Traffic Signal		Illegally Parked/Unattended
	Ran Stop Sign	1	Swerving/Evasive Action
	Crossed Centerline		Over-Correcting/Over-Steering
	FTYROW: At Uncontrolled Intersection		Downhill Runaway
	FTYROW: Making Right Turn on Red Signal		Equipment Failure
	FTYROW: From Stop Sign		Separation of Units
	FTYROW: From Yield Sign		Ran Off Road - Right
2	FTYROW: Making Left Turn		Ran Off Road - Straight
1	FTYROW: From Driveway		Ran Off Road - Left
	FTYROW: From Parked Position	1	Lost Control
	FTYROW: To Pedestrian	1	Inattentive/Distracted By: Passenger
2	FTYROW: Other (explain in narrative)		Inattentive/Distracted By: Use of Phone or Other
	Traveling Wrong Way or on Wrong Side of Rd		Inattentive/Distracted By: Fallen Object
2	Driving Too Fast for Conditions		Inattentive/Distracted By: Fatigued/Asleep
	Exceeded Authorized Speed		Other: Vision Obstructed
3	Made Improper Turn		Oversized Load/ Oversized Vehicle
	Improper Lane Change	1	Cargo/Equipment Loss or Shift
3	Followed Too Close	7	Other: Other Improper Action
	Disregarded Railroad Signal	8	Unknown
	Disregarded Warning Sign	1	Other: No Improper Action
1	Operating Vehicle in Reckless/Aggressive Manner		None Indicated

Selection Filter:

None

Analyst: OMV

Notes: Radius=150'

Iowa Department of Transportation

Driver and Time Summary

S 25th St and 1st Ave S

Report Version 1.0 Aug 2006

Crash Time of Day Summary:

From / To	00:00 01:59	02:00 03:59	04:00 05:59	06:00 07:59	08:00 09:59	10:00 11:59	12:00 13:59	14:00 15:59	16:00 17:59	18:00 19:59	20:00 21:59	22:00 23:59	NR	Total	%
SUN	-	-	-	-	-	-	1	-	1	1	-	-	-	3	8
MON	-	-	-	-	-	2	1	1	-	1	-	-	-	5	13
TUE	-	-	-	-	-	1	-	1	1	-	-	-	-	3	8
WED	-	-	-	-	-	-	2	1	2	-	-	-	-	5	13
THU	-	-	-	1	1	-	3	-	4	-	-	-	-	9	23
FRI	-	-	-	-	-	1	2	1	1	-	1	-	-	6	15
SAT	-	-	-	1	-	1	4	1	1	-	-	-	-	8	21
Tot.				2	1	5	13	5	10	2	1			39	
%				5	3	13	33	13	26	5	3				100

Driver Age/Gender Summary:

Age	Male	Female	NR	Drivers	%
<14	-	-	-		
14	-	-	-		
15	-	-	-		
16	2	-	-	2	2
17	1	3	-	4	5
18	3	1	-	4	5
19	1	1	-	2	2
20	-	2	-	2	2
21 to 24	2	3	-	5	6
25 to 29	2	2	-	4	5
30 to 34	3	3	-	6	7
35 to 39	2	3	-	5	6
40 to 44	3	3	-	6	7
45 to 49	4	4	-	8	10
50 to 54	7	4	-	11	13
55 to 59	3	-	-	3	4
60 to 64	1	-	-	1	1
65 to 69	-	3	-	3	4
70 to 74	1	3	-	4	5
75 to 79	1	-	-	1	1
80 to 84	1	-	-	1	1
85 to 89	2	-	-	2	2
90 to 94	-	-	-		
95 plus	-	-	-		
NR	-	1	7	8	10
Drivers	39	36	7	82	
%	48	44	9		100

Drug/Alcohol Summary:

	Total	%
Drug		
Alcohol, Less than Statutory		
Alcohol, Statutory		
Drug/Alcohol, Less than Statutory		
Drug/Alcohol, Statutory		
Refused		
Under Influence of Alc/Drugs/Meds		
None Indicated	39	100
Total Crashes	39	100

Fixed Object Struck Summary:

	Vehs.	%
Bridge/Bridge rail/Overpass		
Underpass/Structure Support		
Culvert		
Ditch/Embankment		
Curb/Island/Raised Median		
Guardrail		
Concrete Barrier		
Tree		
Pole - Utility/Light/Etc	2	2
Sign Post		
Mailbox		
Impact Attenuator		
Other Fixed Object		
None	80	98
Total Vehicles	82	100

Selection Filter:

None

Analyst: OMV

Notes: Radius=150'

Intersection: 1st Ave S & S 25th St ID#: 419

Lane Width	**Turn Lanes**
Approaching N/S: 10 ft E/W: 12 ft	Left turn lanes on N/S/E/W approaches (N/S left turn lanes are continued through the intersection No right turn lanes
Sidewalk/ADA Ramps	**Lighting**
Sidewalks exist in the NW and NE corners. At the time of field review, site reconstruction was occurring in the NE and NW corners.	There is only single street light located on a wood pole in the NW corner of the intersection
Parking	**Access/Driveways**
No parking existing along both streets	Commercial driveways exist on all approaches at varying distances from the intersection
Miscellaneous	
1. The intersection is being reconstructed as a part of the East Region Phase 2 project. Construction is scheduled for 2015. Improvements include new traffic signal, adding right turn lanes to all approaches, installing improving/constructing sidewalks/trails along 1st Ave S, corridor street lighting, and combining driveways to increase distance from the intersection on all approaches.	

Cost Opinion

Intersection	Item	Period for Modification		
		Short-Term (0-2 Years)	Mid-Term (2-5 Years)	Long-Term (5-15 Years)
1st Ave S & S 25th St	None			
Total				

CLICK TO RETURN TO SIGNAL LOCATION MAP

1st Ave S & S 29th St ID#: 420

Intersection: 1st Ave S & S 29th St ID#: 420

Signal Evaluation	MUTCD Issues
1. Siemens Eagle M40 signal controller 2. PEEK VideoTrak Plus video detection 3. Does have communication equipment (has fiber optic distribution panel, but no fibers terminated) 4. Does have battery back-up system	1. The advance lane control signs do not have MUTCD approved symbols 2. When replacing street name signs, signs on mast arms shall have 12", upper and lowercase lettering

Misc. Comments
1. The traffic signal is being replaced as a part of East Region Phase 3 project. All equipment and materials is being replaced, including the control cabinet, poles, signal heads, and signing. Communication fiber will be installed to connect to 1st Ave S & S 25th St as well as 1st Ave S & S 32nd St. Construction scheduled to occur in 2016.

Budget Needs

Intersection	Item	Period for Modification		
		Short-Term (0-2 Years)	Mid-Term (2-5 Years)	Long-Term (5-15 Years)
1st Ave S & S 29th St	To be replaced in 2017 - East Region Project			
	Annual Maintenance	$800	$1,200	$4,000
Total		$800	$1,200	$4,000

SIGNAL EQUIPMENT DATA

INTERSECTION: 1st Ave S & S 29th St

DATE: 6/26

POWER:

ZONE: 4

ADDRESS:

ID: 420

CONTROLLER:
BRAND:
MODEL:

SOFTWARE VER:

DETECTORS:
LOOP:

VIDEO:

PUSHBUTTONS:

POLE DATA

POLE NO.	POLE TYPE	POLE MATL.	TYPE OF BASE	ARM LENGTH / PEDSTL. HEIGHT		REMARKS
1	3	2	1	30		No cement lip, looks like its been hit
2	1	2	1	25		Looks like its been hit
3	3	2	1	30		
4	1	2	1	25		

POLE TYPE
1. SINGLE MAST ARM
2. TWIN MAST ARM
3. COMBINATION
4. PEDESTAL
5. UTILITY
6. OTHER

POLE MATL.
1. ALUMINUM
2. STEEL
3. WOOD
4. OTHER

TYPE OF BASE
1. PLATE
2. STEEL TRANSFORMER
3. ALUM. TRANSFORMER

AUXILIARY EQUIPMENT

VIDEO

PRE-EMPTION

CONFLICT MONITOR

BATTERY BACK-UP

DETECTOR AMP

COMMUNICATION

SIGNAL TIMING DATA

INTERSECTION: 1st Ave S & S 29th St

CONTROLLER: Eagle

DATE: 6/26/14 - Existing Timings

Basic Timing Data

	Ph1 -EBL	Ph2 -WB	Ph3 -NBL	Ph4 -SB	Ph5 -WBL	Ph6 -EB	Ph7 -SBL	Ph8 -NB
Min Grn	5	5	5	5	5	5	5	5
Passage	2.5	2.5	2.5	2.5	2.5	2.5	2.5	2.5
Max 1	30	30	20	30	30	120	20	30
Max 2	30	50	30	50	30	50	30	50
Yellow	3.0	3.2	3.0	3.2	3.0	3.2	3.0	3.2
Red Clr	1.0	1.5	1.0	1.5	1.0	1.5	1.0	1.5
Walk		7		7		7		7
Ped Clear		8		8		8		8
Recall		Soft		Min		Soft	Min	
Lock/Non	Lock				Lock			
Act/Non-Act								

Coordination Plan Data

Dial 1/Split 1 Cycle: 100 Offset: 50 Alt Seq 1

Phase	1	2	3	4	5	6	7	8
Time	14	39	22	25	16	37	17	30
Mode		Coord			Lag	Coord		

Active Periods: 6:00 AM - 9:00 PM Mon-Sat, 8:00 AM - 6:00 PM Sun

Dial 2/Split 1 Cycle: Offset:

Phase	1	2	3	4	5	6	7	8
Time								
Mode								

Active Periods:

Dial 3/Split 1 Cycle: Offset:

Phase	1	2	3	4	5	6	7	8
Time								
Mode								

Active Periods:

Phasing

N

INDICATE NORTH

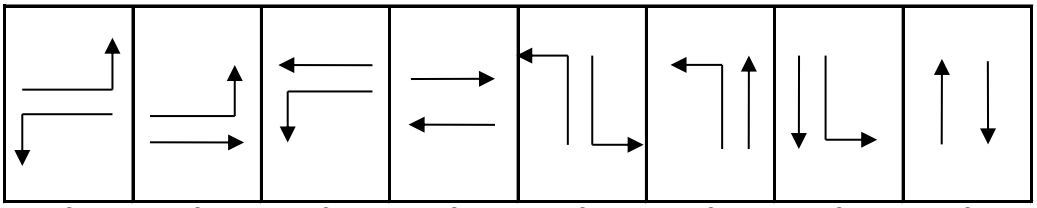

1 & 5 | 1 & 6 | 2 & 5 | 2 & 6 | 3 & 7 | 3 & 8 | 4 & 7 | 4 & 8

City of Fort Dodge

1st Ave S + 5th 29th St

SIGNAL LAYOUT:

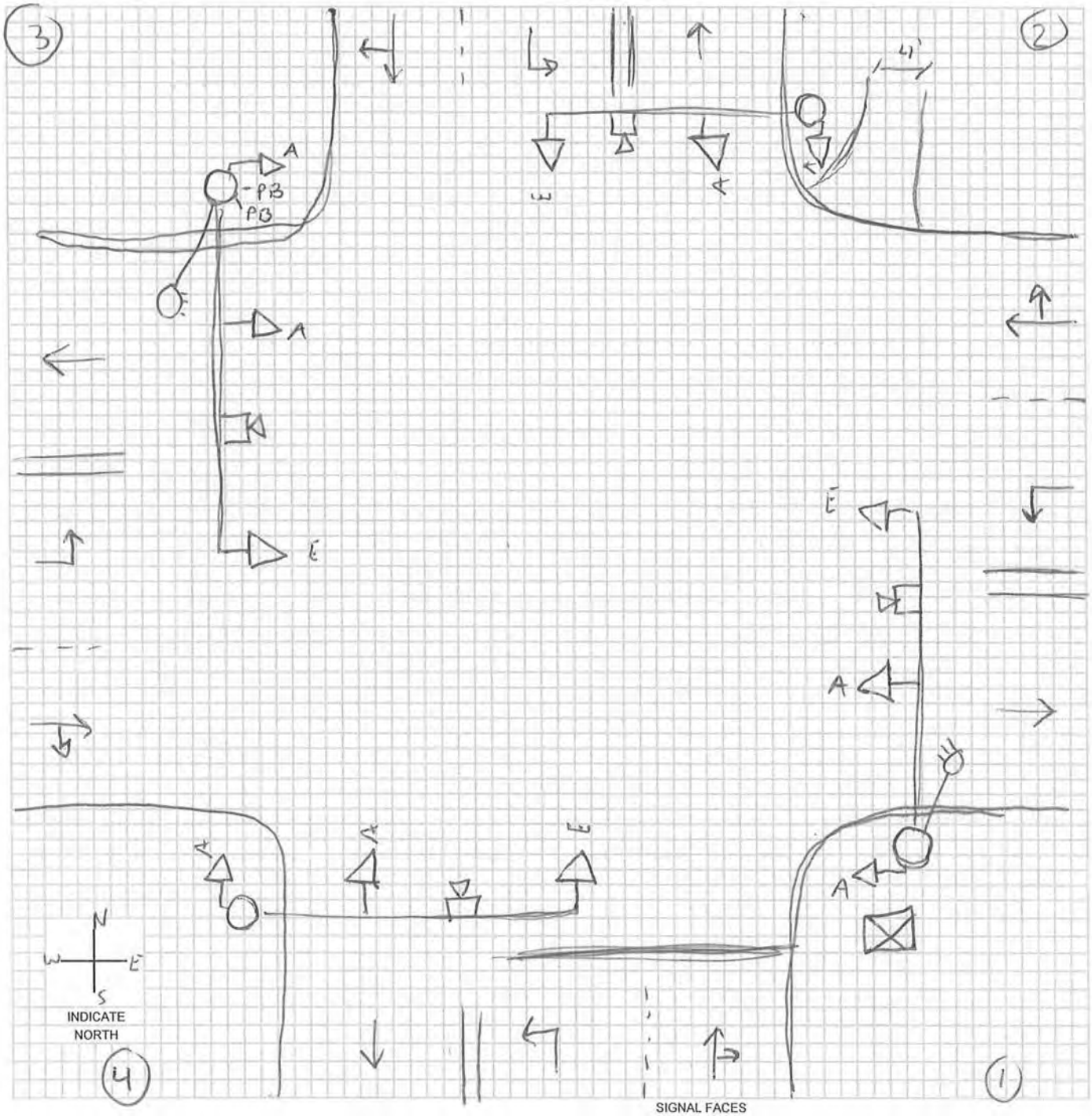

SIGNAL FACES

A	B	C	D	E	F	G	H	I	J	K	L	M	O
12 R	12 R	12 R	12 R	12 R	12 R	12 ◄R	12 ◄R	12 R	12 R	DW	W/DW	W DW	
12 Y	12 ◄Y / 12 Y	12 Y	12 Y	12 Y	12 ◄Y	12 ◄Y	12 ◄Y	12 Y	12 Y	W	CD		
12 G	12 ◄G / 12 G	12 G	12 G	12 ◄G	12 ◄G	12 ◄G	12 ◄FY	12 G	12 G			N: W CD DW	
		12 ◄G	12 ◄Y				12 ◄G	12 G►	12 Y►				
			12 ◄G						12 G►				

LEGEND

- (7) POLE & NUMBER
- SIGNAL INDICATION
- PEDESTRIAN SIGNAL INDICATION
- PB PUSHBUTTON
- 00-00-PD LOOP DECTETOR
- DISTANCE FROM STOP LINE - AREA OF DETECTION - PRESENCE PR; PULSE P; DELAY D; NO DELAY ND; EXTENSION E
- CONTROLLER
- (M) METER
- VIDEO DET CAMERA

-* OPTICALLY PROGRAMMABLE

Intersection: 1st Ave S & S 29th St ID#: 420

Crash Summary	**Trends**
1. Crash rate is at the statewide average (0.86 crashes/MEV). 2. 14 of the 50 crashes were injury crashes. The most severe was possible injury crash. 3. Followed too close (10%) was reported most frequently as the major cause; other or unknown accounted for 42% (23 crashes indicated the surface condition was wet, ice, snow, or slush). 4. Two vehicles were reported striking a fixed object: a pole (2) 5. 60% of the crashes occurred between 12 PM and 6 PM 6. 43% of the drivers involved in the crashes were under the age of 30.	1. The intersection averages 5 crashes per year. 2011 and 2012 experienced a total of 1 crash. 2. 60% of the crashes were rear-end crashes; 3. Vehicles traveling east/west were involved in 74% of the crashes.
Mitigation Options / Potential Improvements	
1. The intersection is being reconstructed as a part of the East Region Phase 3 project. Construction is scheduled for 2016. Improvements include new traffic signal and adding right turn lanes to all approaches. These should reduce the potential for crashes.	
Funding Potential	
1. This intersection received TSIP funding in 2015.	

Cost Opinion

Intersection	Item	Period for Modification		
		Short-Term (0-2 Years)	Mid-Term (2-5 Years)	Long-Term (5-15 Years)
1st Ave S & S 29th St	None			
Total				

Intersection Crash Summary

Location: 1st Ave S & S 29th St
City/County: Fort Dodge, Webster County
Time Period: 2004- May 2014 Crash Period = 10.5 years
Prepared by: OMV

NUMBER OF CRASHES

0	Fatal Crashes	0 fatalities	0 injuries
0	Major Injury Crashes		0 injuries
0	Minor Injury Crashes		0 injuries
14	Possible/Unknown Injury Crashes		17 injuries
36	Property Damage Only Crashes		
Totals: 50	Crashes	0 fatalities	17 injuries

CRASH RATES

Total Crash Rate =	50	/	58.12 MEV	=	0.86 Total Crashes/MEV
Fatal Crash Rate =	0	/	58.12 MEV	=	0.00 Fatal Crashes/MEV
Fatal/Injury Crash Rate =	14	/	58.12 MEV	=	0.24 F & I Crashes/MEV

CRASH FREQUENCY

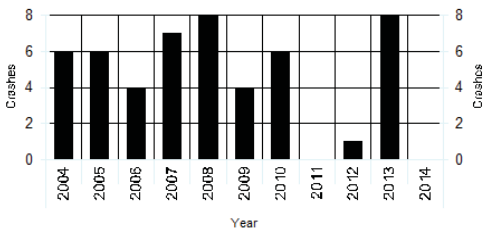

CRASH TYPE

1 Head-on	2 Sideswipe, Same Direction	Non Vehicle Collision Type	
30 Rear-end Crash	0 Sideswipe, Opposite Direction	0 Pedestrian	
11 Broadside/Right angle Crash	0 Parked	0 Bicycle	
3 Angle, Oncoming Left Turn	0 Other	2 Fixed Object	
0 Backing	1 Unknown		

TRAFFIC - AADT

North Approach =	4830
South Approach =	6200
East Approach =	10100
West Approach =	9200
Million Entering Vehicles (MEV) =	58.12

Notes:
IDOT 2011 AADT

S 29th St and 1st Ave S

2004 - 2014 Reportable Crashes

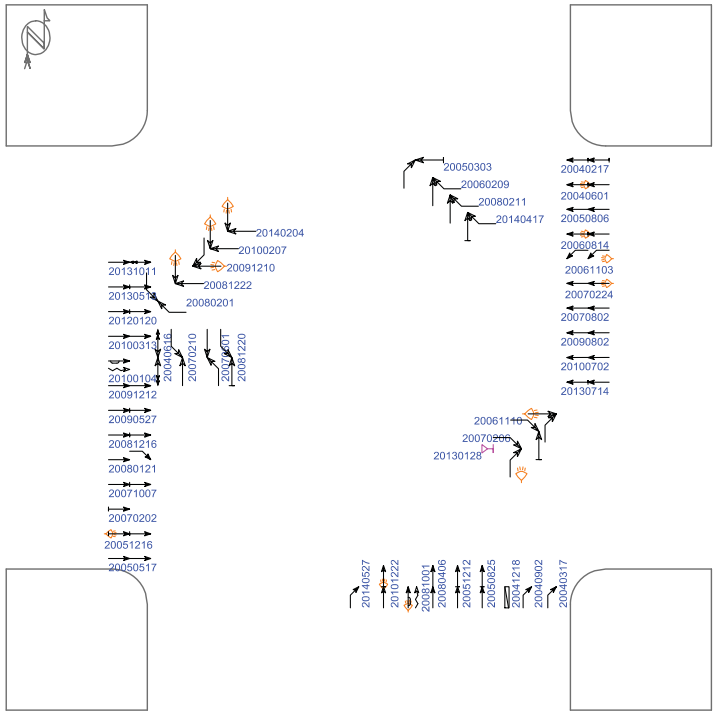

(0) crashes could not be placed in this schematic

Straight	Parked	Pedestrian	Fixed objects:	
Stopped	Erratic	Bicycle	General	Pole
Unknown	Out of control	Injury	Signal	Curb
Backing	Right turn	Fatality	Tree	Animal
Overtaking	Left turn	Nighttime	3rd vehicle	
Sideswipe	U-turn	DUI	Extra data	

Pd' Programming, Inc. 07/11/2014

Iowa Department of Transportation

Major Cause Summary

S 29th St and 1st Ave S

Report Version 1.1 Jan 2005

Analysis Years: 2004 [6], 2005 [6], 2006 [4], 2007 [7], 2008 [8], 2009 [4], 2010 [6], 2012 [1], 2013 [8]

Crash Summary:

Fatal	-
Major Injury	-
Minor Injury	-
Possible/Unknown	14
PDO	36
Total Crashes	50

Injury Summary:

Fatal	-
Major Injury	-
Minor Injury	-
Possible	15
Unknown	2
Total Injuries	17

TOT Property Damage: $122,125

AVG Property Damage: $2,443

Surface Condition Summary:

Dry	27
Wet	7
Ice	2
Snow	11
Slush	3
Sand/Dirt/Oil/Gravel	-
Water	-
Other	-
Unknown	-
Not Reported	-
Total Crashes	50

Major Cause Summary:

	Animal		Improper Backing
2	Ran Traffic Signal		Illegally Parked/Unattended
	Ran Stop Sign		Swerving/Evasive Action
3	Crossed Centerline		Over-Correcting/Over-Steering
	FTYROW: At Uncontrolled Intersection		Downhill Runaway
2	FTYROW: Making Right Turn on Red Signal		Equipment Failure
1	FTYROW: From Stop Sign		Separation of Units
	FTYROW: From Yield Sign		Ran Off Road - Right
	FTYROW: Making Left Turn		Ran Off Road - Straight
3	FTYROW: From Driveway		Ran Off Road - Left
1	FTYROW: From Parked Position	3	Lost Control
	FTYROW: To Pedestrian		Inattentive/Distracted By: Passenger
2	FTYROW: Other (explain in narrative)		Inattentive/Distracted By: Use of Phone or Other
	Traveling Wrong Way or on Wrong Side of Rd	1	Inattentive/Distracted By: Fallen Object
4	Driving Too Fast for Conditions		Inattentive/Distracted By: Fatigued/Asleep
	Exceeded Authorized Speed	1	Other: Vision Obstructed
1	Made Improper Turn		Oversized Load/ Oversized Vehicle
	Improper Lane Change		Cargo/Equipment Loss or Shift
5	Followed Too Close	17	Other: Other Improper Action
	Disregarded Railroad Signal	3	Unknown
	Disregarded Warning Sign	1	Other: No Improper Action
	Operating Vehicle in Reckless/Aggressive Manner		None Indicated

Selection Filter:

None

Analyst: OMV

Notes: Radius=150'

Iowa Department of Transportation

Driver and Time Summary

S 29th St and 1st Ave S

Report Version 1.0 Aug 2006

Crash Time of Day Summary:

From / To	00:00 01:59	02:00 03:59	04:00 05:59	06:00 07:59	08:00 09:59	10:00 11:59	12:00 13:59	14:00 15:59	16:00 17:59	18:00 19:59	20:00 21:59	22:00 23:59	NR	Total	%
SUN	1	-	-	-	-	1	4	-	-	1	-	-	-	7	14
MON	-	-	-	-	-	1	3	1	2	-	1	1	-	9	18
TUE	-	-	-	-	-	-	1	2	1	-	-	2	-	6	12
WED	-	-	-	-	1	1	-	1	-	1	1	-	-	5	10
THU	-	-	-	-	-	-	2	3	1	-	1	-	-	7	14
FRI	-	-	-	-	2	-	-	3	1	2	1	-	-	9	18
SAT	-	-	-	-	-	1	2	2	1	1	-	-	-	7	14
Tot.	1				3	4	12	12	6	5	4	3		50	
%	2				6	8	24	24	12	10	8	6			100

Driver Age/Gender Summary:

Age	Male	Female	NR	Drivers	%
<14	-	-	-		
14	-	-	-		
15	-	1	-	1	1
16	1	-	-	1	1
17	3	1	-	4	4
18	2	-	-	2	2
19	-	4	1	5	5
20	5	5	-	10	10
21 to 24	6	4	-	10	10
25 to 29	6	4	-	10	10
30 to 34	4	3	-	7	7
35 to 39	2	2	-	4	4
40 to 44	2	3	-	5	5
45 to 49	5	5	1	11	11
50 to 54	1	3	-	4	4
55 to 59	4	4	-	8	8
60 to 64	1	1	-	2	2
65 to 69	2	2	-	4	4
70 to 74	2	-	-	2	2
75 to 79	2	3	-	5	5
80 to 84	1	-	-	1	1
85 to 89	-	-	-		
90 to 94	-	-	-		
95 plus	-	-	-		
NR	1	-	5	6	6
Drivers	50	45	7	102	
%	49	44	7		100

Drug/Alcohol Summary:

	Total	%
Drug		
Alcohol, Less than Statutory		
Alcohol, Statutory	1	2
Drug/Alcohol, Less than Statutory		
Drug/Alcohol, Statutory		
Refused		
Under Influence of Alc/Drugs/Meds		
None Indicated	49	98
Total Crashes	50	100

Fixed Object Struck Summary:

	Vehs.	%
Bridge/Bridge rail/Overpass		
Underpass/Structure Support		
Culvert		
Ditch/Embankment		
Curb/Island/Raised Median		
Guardrail		
Concrete Barrier		
Tree		
Pole - Utility/Light/Etc	2	2
Sign Post		
Mailbox		
Impact Attenuator		
Other Fixed Object		
None	100	98
Total Vehicles	102	100

Selection Filter:

None

Analyst: OMV

Notes: Radius=150'

Intersection: 1st Ave S & S 29th St ID#: 420

Lane Width	**Turn Lanes**
Approaching N/S: 12 ft E/W: 12 ft	Left turn lanes on N/S/E/W approaches No right turn lanes
Sidewalk/ADA Ramps	**Lighting**
A 4' wide sidewalk exists in the NE corner of the intersection along S 29th St. That is the only sidewalk at the intersection. The associated ramp does not have detectable warning panels.	There are combination signal/lighting poles located in the NW and SE corners of the intersection. No other street lighting exists.
Parking	**Access/Driveways**
No parking existing along both streets	Commercial driveways exist on all approaches at varying distances from the intersection (nearest located 150 ft from intersection)
Miscellaneous	
1. The intersection is being reconstructed as a part of the East Region Phase 3 project. Construction is scheduled for 2016. Improvements include new traffic signal, adding right turn lanes to all approaches, installing/improving/constructing sidewalks/trails along 1st Ave S, corridor street lighting, and combining driveways on all approaches.	

Cost Opinion

Intersection	Item	Period for Modification		
		Short-Term (0-2 Years)	Mid-Term (2-5 Years)	Long-Term (5-15 Years)
1st Ave S & S 29th St	None			
Total				

CLICK TO RETURN TO SIGNAL LOCATION MAP

1st Ave S & S 32nd St ID#: 421

Intersection: 1st Ave S & S 32nd St ID#: 421

Signal Evaluation	MUTCD Issues
1. Econolite ASC/3-2100 signal controller 2. Autoscope Terra Access Point video detection 3. Each approach has protected/permissive left turn phasing 4. Does have communication equipment and has fibers terminated within the distribution panel 5. Does have battery back-up system 6. The pedestrian signal heads have countdown timers	1. Has five-section heads over left turn lanes. Acceptable per previous MUTCD. Should be changed to flashing yellow arrow to comply with 2009 Edition. 2. There is an R3-5a sign (Straight Only) located over a shared through/right turn lane. It needs to be removed. There is another R3-5a sign over a through only lane; the sign is not needed. 3. When replacing street name signs, signs on mast arms shall have 12", upper and lowercase lettering
Misc. Comments	
1. There are sign brackets not being used that should be removed	

Budget Needs

Intersection	Item	Period for Modification		
		Short-Term (0-2 Years)	Mid-Term (2-5 Years)	Long-Term (5-15 Years)
1st Ave S & S 32nd St	Remove Lane Configuration Signs and Brackets	$200		
	Implement Flashing Yellow Arrows			$30,000
	Annual Maintenance	$800	$1,200	$4,000
Total		$1,000	$1,200	$34,000

SIGNAL EQUIPMENT DATA

INTERSECTION: 1st Ave S & S 32nd St

DATE: 6/26/14

POWER: Underground

ZONE: 4

ID: 421

CONTROLLER:
BRAND: Econolite
MODEL: ASC/3-2100

SOFTWARE VER:

DETECTORS:
LOOP: None

VIDEO: Autoscope Terra Access Point NEMA

PUSHBUTTONS:

POLE DATA

POLE NO.	POLE TYPE	POLE MATL.	TYPE OF BASE	ARM LENGTH / PEDSTL. HEIGHT		REMARKS
1	1	2	2	40		Red and green lights missing cups
2	3	2	2	28		
3	3	2	2	28		Has a through only sign, should be through-right
4	3	2	2	28		
5	4	2	2	10		Mesh concrete forming on base

POLE TYPE
1. SINGLE MAST ARM
2. TWIN MAST ARM
3. COMBINATION
4. PEDESTAL
5. UTILITY
6. OTHER

POLE MATL.
1. ALUMINUM
2. STEEL
3. WOOD
4. OTHER

TYPE OF BASE
1. PLATE
2. STEEL TRANSFORMER
3. ALUM. TRANSFORMER

AUXILIARY EQUIPMENT

VIDEO: Autoscope Terra Access Point NEMA

PRE-EMPTION

CPU ID: ODO301FF1OD54O24

CONFLICT MONITOR: Reno MMU-1600

BATTERY BACK-UP: Tech Power Developments ME-XL with 2 batteries

DETECTOR AMP

COMMUNICATION

IP Address: 192.168.11.200
Netmask: 255.255.255.0
Gateway: 192:168.11.1
Link: 12 MPS
Version: 10.1.1 2013.8.1917:19:12

SIGNAL TIMING DATA

INTERSECTION: 1st Ave S & S 32nd St

CONTROLLER: Econolite

DATE: 6/26/14 - Existing Timings

Basic Timing Data

	Ph1 - NBL	Ph2 - SB	Ph3 -	Ph4 - EB	Ph5 -SBL	Ph6 - NB	Ph7 -EBL	Ph8 - WB
Min Grn	8	10	8	10	8	10	8	10
Passage								
Max 1	20	40	15	30	15	40	15	30
Max 2	40	40	40	40	40	40	40	40
Yellow	3.0	4.0	3.0	4.0	3.0	4.0	3.0	4.0
Red Clr	1.0	1.0	1.0	1.0	1.0	1.0	1.0	1.0
Walk	0	7	0	0	0	0	0	7
Ped Clear	0	14	0	0	0	0	0	18
Recall		Veh				Veh		
Lock/Non								
Act/Non-Act	Non	Non	Non	Non	Non	Non	Non	Non

*Couldn't F

Coordination Plan Data

None

Dial 1/Split 1 Cycle: Offset:

Phase	1	2	3	4	5	6	7	8
Time								
Mode								

Active Periods:

Dial 2/Split 1 Cycle: Offset:

Phase	1	2	3	4	5	6	7	8
Time								
Mode								

Active Periods:

Dial 3/Split 1 Cycle: Offset:

Phase	1	2	3	4	5	6	7	8
Time								
Mode								

Active Periods:

Phasing

N

INDICATE NORTH

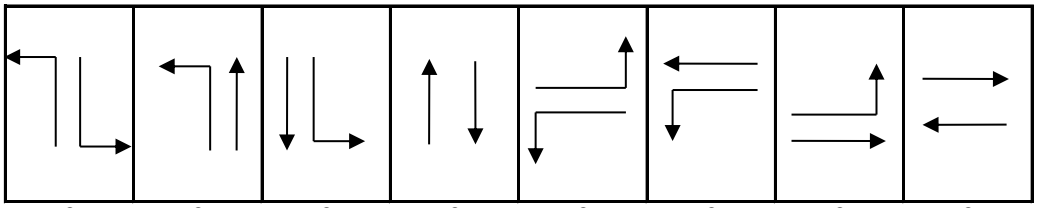

1 & 5 | 1 & 6 | 2 & 5 | 2 & 6 | 3 & 7 | 3 & 8 | 4 & 7 | 4 & 8

City of Fort Dodge

1st Ave S + 32nd St

SIGNAL LAYOUT:

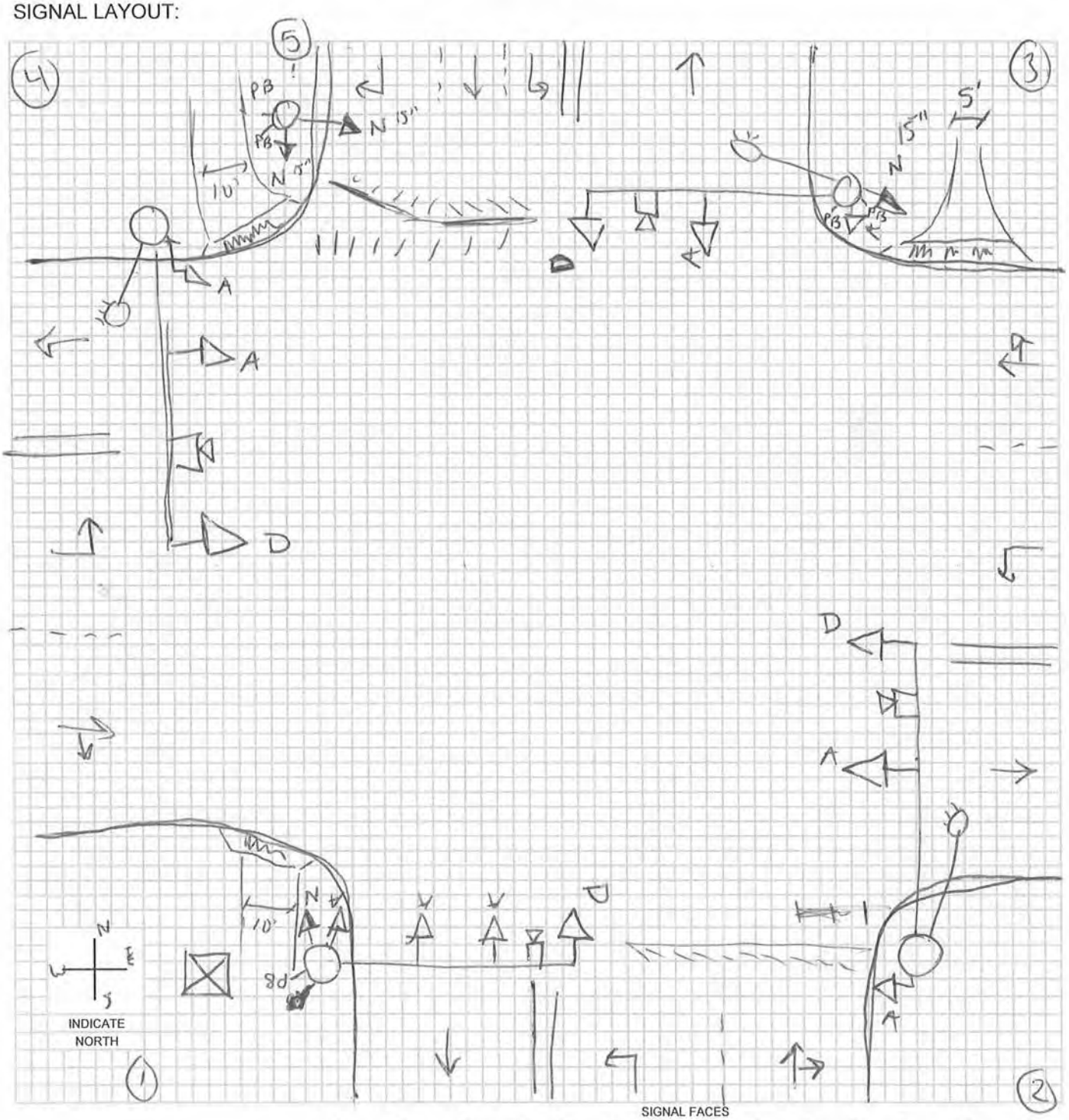

SIGNAL FACES

A	B	C	D	E	F	G	H	I	J	K	L	M	O
12 R	12 R	12 R	12 R	12 R	12 R	◄R	◄R	12 R	12 R	DW	W/DW	W DW	
12 Y	12 ◄Y / 12 Y	12 Y	12 Y	12 Y	12 ◄Y	12 ◄Y	12 ◄Y	12 Y	12 Y	W	CD		
12 G	12 ◄G / 12 G	12 G	12 G	12 ◄G	12 ◄G	12 ◄G	12 ◄FY	12 G	12 G			N: W CD DW	
		12 ◄G	12 ◄Y				12 ◄G	12 G►	12 Y►				
			12 ◄G						12 G►				

LEGEND

- (7) POLE & NUMBER
- SIGNAL INDICATION
- PEDESTRIAN SIGNAL INDICATION
- PB PUSHBUTTON
- 00-00-PD LOOP DECTETOR
- DISTANCE FROM STOP LINE - AREA OF DETECTION - PRESENCE PR; PULSE P; DELAY D; NO DELAY ND; EXTENSION E
- CONTROLLER
- (M) METER
- VIDEO DET CAMERA

-* OPTICALLY PROGRAMMABLE

Intersection: 1st Ave S & S 32nd St ID#: 421

Crash Summary	**Trends**
1. Crash rate is below the statewide average (0.36 crashes/MEV). 2. 3 of the 14 crashes were injury crashes. The most severe was possible injury crash. 3. Driving too fast for conditions (29%) and followed too close (21%) were reported most frequently as the major cause (7 crashes indicated the surface condition was wet, ice, snow, or slush). 4. No fixed objects were struck 5. 61% of the crashes occurred between 10 AM and 4 PM 6. 29% of the drivers involved in the crashes were under the age of 30.	1. The intersection averages 1.4 crashes per year. Only 2007 (4) and 2013 (3) had more than 2 crashes in a given year. 2. 64% of the crashes were rear-end crashes
Mitigation Options / Potential Improvements	
1. The east approach to the intersection was constructed in 2013. Continue to monitor if safety concern arises.	
Funding Potential	
1. Not needed at this time	

Cost Opinion

Intersection	Item	Period for Modification		
		Short-Term (0-2 Years)	Mid-Term (2-5 Years)	Long-Term (5-15 Years)
1st Ave S & S 32nd St	None			
Total				

Intersection Crash Summary

Location: 1st Ave S & S 32nd St
City/County: Fort Dodge, Webster County
Time Period: 2004- May 2014 Crash Period = 10.5 years
Prepared by: OMV

NUMBER OF CRASHES

0	Fatal Crashes	0 fatalities	0 injuries
0	Major Injury Crashes		0 injuries
0	Minor Injury Crashes		0 injuries
3	Possible/Unknown Injury Crashes		4 injuries
11	Property Damage Only Crashes		
Totals: 14	Crashes	0 fatalities	4 injuries

CRASH RATES

Total Crash Rate =	14	/	39.42 MEV	=	0.36 Total Crashes/MEV
Fatal Crash Rate =	0	/	39.42 MEV	=	0.00 Fatal Crashes/MEV
Fatal/Injury Crash Rate =	3	/	39.42 MEV	=	0.08 F & I Crashes/MEV

CRASH FREQUENCY

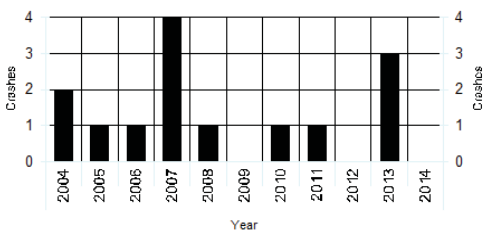

CRASH TYPE

0 Head-on	1 Sideswipe, Same Direction	Non Vehicle Collision Type
9 Rear-end Crash	0 Sideswipe, Opposite Direction	0 Pedestrian
3 Broadside/Right angle Crash	0 Parked	0 Bicycle
1 Angle, Oncoming Left Turn	0 Other	0 Fixed Object
0 Backing	0 Unknown	

TRAFFIC - AADT

North Approach =	7300
South Approach =	3170
East Approach =	0
West Approach =	10100
Million Entering Vehicles (MEV) =	39.42

Notes:
IDOT 2011 AADT

S 32nd St and 1st Ave S

2004 - 2014 Reportable Crashes

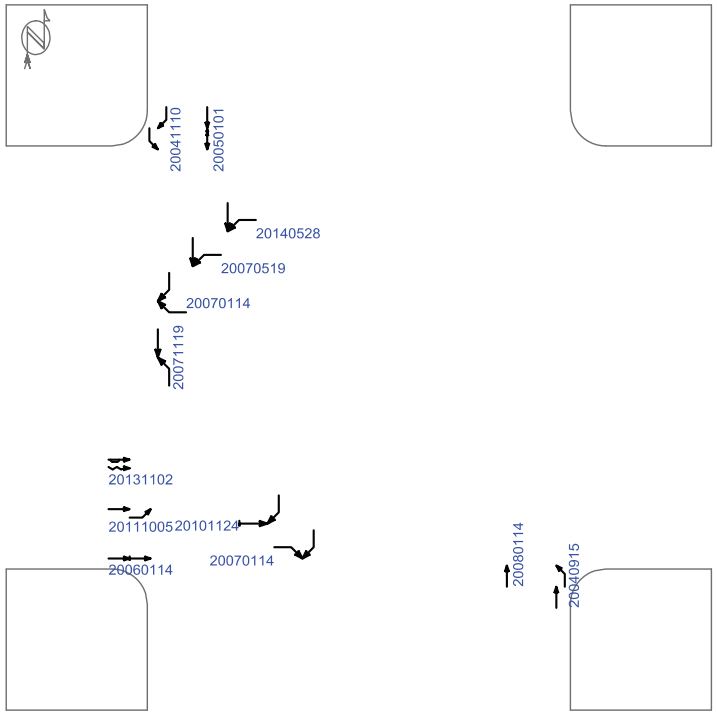

(0) crashes could not be placed in this schematic

Straight
Stopped
Unknown
Backing
Overtaking
Sideswipe
Parked
Erratic
Out of control
Right turn
Left turn
U-turn
Pedestrian
Bicycle
Injury
Fatality
Nighttime
DUI
Fixed objects:
General
Signal
Tree
Pole
Curb
Animal
3rd vehicle
Extra data

Pd' Programming, Inc. 07/11/2014

Iowa Department of Transportation

Driver and Time Summary

S 32nd St and 1st Ave S

Report Version 1.0 Aug 2006

Crash Time of Day Summary:

From / To	00:00 01:59	02:00 03:59	04:00 05:59	06:00 07:59	08:00 09:59	10:00 11:59	12:00 13:59	14:00 15:59	16:00 17:59	18:00 19:59	20:00 21:59	22:00 23:59	NR	Total	%
SUN	-	-	-	-	-	1	1	-	-	-	-	-	-	2	14
MON	-	-	-	-	-	-	-	2	-	-	-	-	-	2	14
TUE	-	-	-	-	-	-	-	-	-	-	-	-	-		
WED	-	-	-	1	-	2	-	-	1	-	-	-	-	4	29
THU	-	-	-	-	-	-	-	-	-	-	-	-	-		
FRI	-	-	-	-	-	-	-	-	-	2	-	-	-	2	14
SAT	-	-	-	-	-	-	1	3	-	-	-	-	-	4	29
Tot.				1		3	2	5	1	2				14	
%				7		21	14	36	7	14					100

Driver Age/Gender Summary:

Age	Male	Female	NR	Drivers	%
<14	-	-	-		
14	-	-	-		
15	-	-	-		
16	-	-	-		
17	1	-	-	1	4
18	2	-	-	2	7
19	-	-	-		
20	1	1	-	2	7
21 to 24	-	1	-	1	4
25 to 29	-	2	-	2	7
30 to 34	1	4	-	5	18
35 to 39	2	1	-	3	11
40 to 44	-	1	-	1	4
45 to 49	1	1	-	2	7
50 to 54	2	1	-	3	11
55 to 59	-	-	-		
60 to 64	1	1	-	2	7
65 to 69	1	2	-	3	11
70 to 74	1	-	-	1	4
75 to 79	-	-	-		
80 to 84	-	-	-		
85 to 89	-	-	-		
90 to 94	-	-	-		
95 plus	-	-	-		
NR	-	-	-		
Drivers	13	15	0	28	
%	46	54	0		100

Drug/Alcohol Summary:

	Total	%
Drug		
Alcohol, Less than Statutory		
Alcohol, Statutory		
Drug/Alcohol, Less than Statutory		
Drug/Alcohol, Statutory		
Refused		
Under Influence of Alc/Drugs/Meds		
None Indicated	14	100
Total Crashes	14	100

Fixed Object Struck Summary:

	Vehs.	%
Bridge/Bridge rail/Overpass		
Underpass/Structure Support		
Culvert		
Ditch/Embankment		
Curb/Island/Raised Median		
Guardrail		
Concrete Barrier		
Tree		
Pole - Utility/Light/Etc		
Sign Post		
Mailbox		
Impact Attenuator		
Other Fixed Object		
None	28	100
Total Vehicles	28	100

Selection Filter:

None

Analyst: OMV

Notes: Radius=150'

Iowa Department of Transportation

Major Cause Summary

S 32nd St and 1st Ave S

Report Version 1.1 Jan 2005

Analysis Years: 2004 [2], 2005 [1], 2006 [1], 2007 [4], 2008 [1], 2010 [1], 2011 [1], 2013 [3]

Crash Summary:

Fatal	-
Major Injury	-
Minor Injury	-
Possible/Unknown	3
PDO	11
Total Crashes	14

Injury Summary:

Fatal	-
Major Injury	-
Minor Injury	-
Possible	4
Unknown	-
Total Injuries	4

TOT Property Damage: $48,702

AVG Property Damage: $3,479

Surface Condition Summary:

Dry	7
Wet	3
Ice	3
Snow	1
Slush	-
Sand/Dirt/Oil/Gravel	-
Water	-
Other	-
Unknown	-
Not Reported	-
Total Crashes	14

Major Cause Summary:

	Animal		Improper Backing
	Ran Traffic Signal		Illegally Parked/Unattended
	Ran Stop Sign		Swerving/Evasive Action
2	Crossed Centerline		Over-Correcting/Over-Steering
	FTYROW: At Uncontrolled Intersection		Downhill Runaway
	FTYROW: Making Right Turn on Red Signal		Equipment Failure
1	FTYROW: From Stop Sign		Separation of Units
	FTYROW: From Yield Sign		Ran Off Road - Right
1	FTYROW: Making Left Turn		Ran Off Road - Straight
	FTYROW: From Driveway		Ran Off Road - Left
	FTYROW: From Parked Position	1	Lost Control
	FTYROW: To Pedestrian		Inattentive/Distracted By: Passenger
	FTYROW: Other (explain in narrative)		Inattentive/Distracted By: Use of Phone or Other
	Traveling Wrong Way or on Wrong Side of Rd		Inattentive/Distracted By: Fallen Object
4	Driving Too Fast for Conditions		Inattentive/Distracted By: Fatigued/Asleep
	Exceeded Authorized Speed		Other: Vision Obstructed
	Made Improper Turn		Oversized Load/ Oversized Vehicle
	Improper Lane Change		Cargo/Equipment Loss or Shift
3	Followed Too Close	1	Other: Other Improper Action
	Disregarded Railroad Signal		Unknown
	Disregarded Warning Sign	1	Other: No Improper Action
	Operating Vehicle in Reckless/Aggressive Manner		None Indicated

Selection Filter:

None

Analyst: OMV

Notes: Radius=150'

Intersection: 1st Ave S & S 32nd St ID#: 421

Lane Width	**Turn Lanes**
Approaching N/S: 12 ft E/W: 12 ft	Left turn lanes on N/S/E/W approaches Right turn lane on N approach
Sidewalk/ADA Ramps	**Lighting**
A 10' wide trail exists on the west side of S 32nd St through the intersection. A 10' wide trail exists on 1st Ave S only in the NE corner. A 5' wide sidewalk extends north along S 32nd St from the intersection. Each corner of the intersection (SW, NW, and NE) has detectable warning panels. However, the panels in the SW and NW corners are in poor condition and need to be replaced.	There are combination signal/lighting poles located in the NW, NE, and SE corners of the intersection. The lighting arm in the SE corner is rotated over S 32nd St. Housings indicate 250 watt fixtures.
Parking	**Access/Driveways**
No parking existing along both streets	The nearest driveway is located in the NE corner of the intersection along 1st Ave S
Miscellaneous	
1. There are signs of semi tractor-trailer vehicles tracking over the curb in the SW corner of the intersection. Consider reconstructing the radius to eliminate this off-tracking. Turning paths should be reviewed for each corner of the intersection.	

Cost Opinion

Intersection	Item	Period for Modification		
		Short-Term (0-2 Years)	Mid-Term (2-5 Years)	Long-Term (5-15 Years)
1st Ave S & S 32nd St	Replace Detectable Warning Panels	$800		
	Reconstruct Corner Radii to Prevent Truck Offtracking	$7,500		
Total		$8,300		

CLICK TO RETURN TO SIGNAL LOCATION MAP

Kenyon Rd & S 8th St ID#: 523

Intersection: 5th Ave S/Kenyon Rd & S 8th St ID#: 523

Signal Evaluation	MUTCD Issues
1. Siemens Eagle M40 signal and MARC M34 master controller 2. Autoscope Terra Access Point video detection 3. Protected/permissive left turn phasing all approaches 4. Does have communication equipment and has fibers terminated within the distribution panel 5. There is a telephone connection within signal cabinet 6. Does have battery back-up system	1. Have circular indications over left turn lanes. Acceptable per previous MUTCD. Should be changed to flashing yellow arrow to comply with 2009 Edition. 2. Pedestrian signal heads should be replaced to include countdown timers. 3. When replacing street name signs, signs on mast arms shall have 12", upper and lowercase lettering 4. Update clearance (yellow and red) and pedestrian intervals to current standards of practice

Misc. Comments

1. Pushbuttons lack informational signs
2. The pushbutton located in the NW corner is mounted on the signal pole. The signal pole is located in landscaping behind a retaining wall. The pushbutton needs to be relocated so it is adjacent to the sidewalk.
3. There are advance warning flashers located 600 ft in advance on the east approach. These flashers should activate 11 seconds prior to changing to yellow due to the distance and speed.
4. There is a Yield sign located for the westbound right turn movement on to S 8th St. This is beyond the pedestrian crosswalk location. The sign is for westbound vehicles merging with eastbound left turning vehicles. It is recommended to relocate the Yield sign prior to the crosswalk so drivers are looking out for pedestrians and vehicles. With pavement markings, drivers could be directed into their own lanes north of the intersection; however, they would be required to merge into a single lane within 400 ft of the intersection (right lane ends as a right turn only lane at the next intersection).
5. The signal poles on the south side of 5th Ave S/Kenyon Rd have footings that extend above the surrounding sidewalk. Consider reconstructing the footings to be flush with the sidewalk to eliminate a potential tripping hazard.

Budget Needs

Intersection	Item	Period for Modification		
		Short-Term (0-2 Years)	Mid-Term (2-5 Years)	Long-Term (5-15 Years)
5th Ave S/ Kenyon Rd & S 8th St	Install Pushbutton Signs	$200		
	Remove/Relocate Yield Sign in NW Corner	$500		
	Relocate Pedestrian Pushbuttons to next to Sidewalk	$1,250		
	Install Pedestrian Signals, Pushbuttons and Signs for third crossing	$2,500		
	Implement Countdown Pedestrian Signals		$3,200	
	Replace/Upgrade Controller and Cabinet			$20,000
	Implement Flashing Yellow Arrows			$25,000
	Replace Pole Footings to be Flush with Sidewalk			
	Annual Maintenance	$800	$1,200	$4,000
Total		$5,250	$4,400	$49,000

SIGNAL EQUIPMENT DATA

INTERSECTION: Kenyon Rd/5th Ave S & S 8th St

DATE: 6/24/14

POWER: Underground

ZONE: 5

ID: 523

CONTROLLER:
BRAND: Eagle Traffic Control Systems
MODEL: EPAC 3808M40

SOFTWARE VER: OS # 3.32d

DETECTORS:
LOOP: None

VIDEO: Econolite/Autoscope

PUSHBUTTONS:

POLE DATA

POLE NO.	POLE TYPE	POLE MATL.	TYPE OF BASE	ARM LENGTH / PEDSTL. HEIGHT		REMARKS
1	3	2	1	35		Can't reach push button
2	4	1	3	10		
3	3	2	1	38		
4	4	1	3	10		

POLE TYPE
1. SINGLE MAST ARM
2. TWIN MAST ARM
3. COMBINATION
4. PEDESTAL
5. UTILITY
6. OTHER

POLE MATL.
1. ALUMINUM
2. STEEL
3. WOOD
4. OTHER

TYPE OF BASE
1. PLATE
2. STEEL TRANSFORMER
3. ALUM. TRANSFORMER

AUXILIARY EQUIPMENT

VIDEO

PRE-EMPTION

CONFLICT MONITOR: Traffic Control Technologies
Model: RS232

BATTERY BACK-UP: TechPower Development
ME-XL 1000 EPO

DETECTOR AMP

COMMUNICATION: Fiber. 6 position Distribution Panel

Dial up connection

Master Controller: EPAC Marc380M34

SIGNAL TIMING DATA

INTERSECTION: Kenyon Rd/5th Ave S & S 8th St

CONTROLLER:

DATE: 6/24/14 - Existing Timings

Basic Timing Data

	Ph1 -	Ph2 - EB	Ph3 -	Ph4 - SB	Ph5 - EBL	Ph6 - WB	Ph7 -	Ph8 -
Min Grn	0	10	0	10	6	10	0	10
Passage	4.0	5.0	4.0	5.0	4.0	5.0	4.0	5.0
Max 1	0	35	0	35	15	35	0	0
Max 2	0	45	0	45	25	45	0	0
Yellow	3.0	4.0	3.0	3.0	3.0	4.0	3.0	3.0
Red Clr	0.0	2.0	0.0	1.0	1.0	2.0	0.0	1.0
Walk	0	0	0	5	0	5	0	0
Ped Clear	0	0	0	12	0	12	0	0
Recall		Min		Min		Min		
Lock/Non	Non	Non	Non	Non	Non	Non	Non	Non
Act/Non-Act								

Coordination Plan Data

Dial 1/Split 1/2 Cycle: 68 Offset: 28

Phase	1	2	3	4	5	6	7	8
Time	0	20	0	4	12	20		
Mode	Omit	Coor	Omit			Coord	Omit	Omit

Active Periods: All day everyday

Dial 2/Split 1 Cycle: Offset:

Phase	1	2	3	4	5	6	7	8
Time								
Mode								

Active Periods:

Dial 3/Split 1 Cycle: Offset:

Phase	1	2	3	4	5	6	7	8
Time								
Mode								

Active Periods:

Phasing

N

INDICATE NORTH

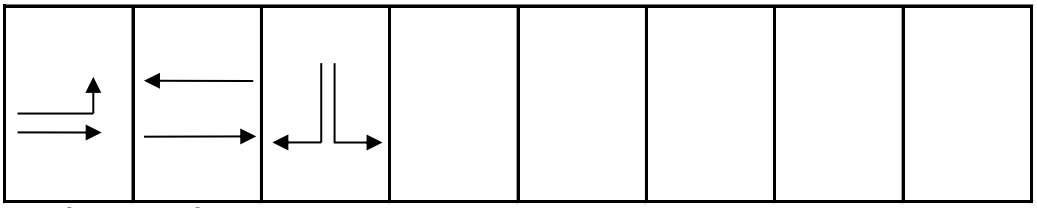

2 & 5 2 & 6 4

SIGNAL LAYOUT:

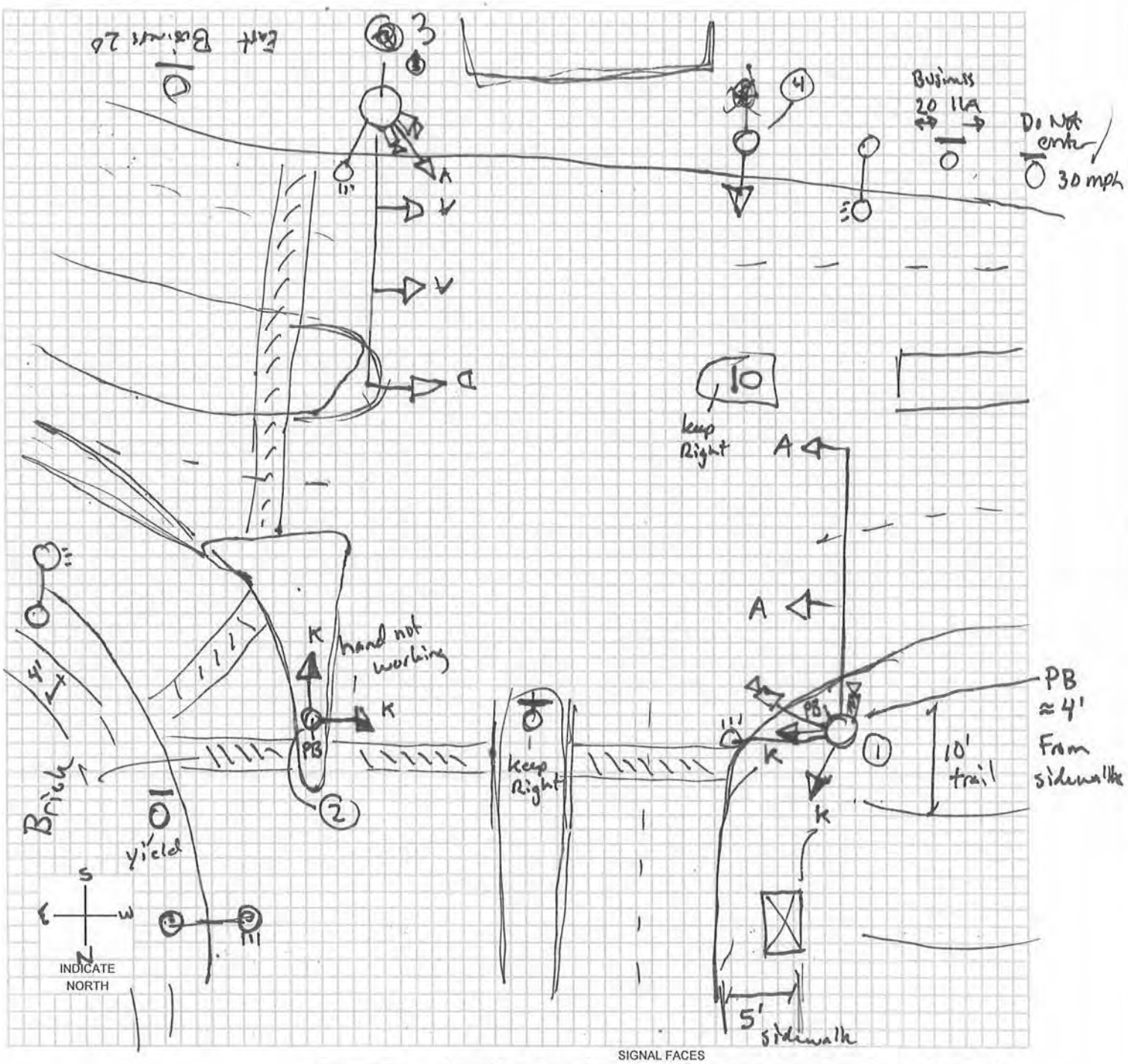

SIGNAL FACES

	A	B	C	D	E	F	G	H	I	J	K	L	M	O
	12 R	12 R	12 R	12 R	12 R	12 R	12 ◄R	12 ◄R	12 R	12 R	DW	W/DW	W DW	
	12 Y	12 ◄Y / 12 Y	12 Y	12 Y	12 Y	12 ◄Y	12 ◄Y	12 ◄Y	12 Y	12 Y	W	CD		
	12 G	12 ◄G / 12 G	12 G	12 G	12 ◄G	12 ◄G	12 ◄G	12 ◄FY	12 G	12 G			N: W CD DW	
			12 ◄G*	12 Y				12 ◄G	12 G►	12 Y►				
				12 ◄G						12 G►				

LEGEND

- (7) POLE & NUMBER
- SIGNAL INDICATION
- PEDESTRIAN SIGNAL INDICATION
- PB PUSHBUTTON
- [00-00-PD] LOOP DECTETOR
- DISTANCE FROM STOP LINE - AREA OF DETECTION
- ⊠ CONTROLLER
- (M) METER
- VIDEO DET CAMERA

PRESENCE	PR
PULSE	P
DELAY	D
NO DELAY	ND
EXTENSION	E

-* OPTICALLY PROGRAMMABLE

K = 9" PED Head

Intersection: 5th Ave S/Kenyon Rd & S 8th St ID#: 523

Crash Summary	**Trends**
1. Crash rate is at the statewide average (0.83 crashes/MEV). 2. 16 of the 65 crashes were injury crashes. The most severe was minor injury crash. 3. There were 5 major causes listed that occurred most frequently being reported for between 5 and 8 crashes (32 crashes indicated the surface condition was wet, ice, snow, or slush). 4. 14 vehicles were reported as striking a fixed object: a pole (4), curb/island/median (3), sign post (3), bridge/bridge rail/overpass (1), ditch/ embankment (1), guardrail (1), and tree (1) 5. 43% of the crashes occurred between 12 PM and 4 PM 6. 41% of the drivers involved in the crashes were under the age of 30.	1. Only 12 crashes occurred since 2010 (through mid 2014). 2010 experienced 15 crashes at the intersection. 2. 42% of the crashes were rear-end crashes 3. 20% were crashes with fixed objects. 6 vehicles were reported hitting a fixed object since 2010 (all single vehicle crashes) 4. Most of the crashes, even recently, involve a westbound vehicle.

Mitigation Options / Potential Improvements

1. Advance warning flashers have been installed on the east approach 600 ft in advance of the intersection. A matching sign and flashers could be mounted on the median for additional attention; however, all signs and flashers would need to be located 680 ft from the intersection due to the lack of sufficient median width at the current location.
2. Eliminating the curves near and at the intersection may help in improving visibility of the intersection, however, grades near the intersection strict any improvements.
3. Implement coordination timings will reduce the potential for rear-end collisions and drivers running the traffic signal.

Funding Potential

1. At this time, funding is only needed to implement coordination timings.

Cost Opinion

Intersection	Item	Period for Modification		
		Short-Term (0-2 Years)	Mid-Term (2-5 Years)	Long-Term (5-15 Years)
5th Ave S/ Kenyon Rd & S 8th St	Relocate Existing and Install Additional Advance Warning Flashers			$5,000
Total				$5,000

Intersection Crash Summary

Location: 5th Ave S/Kenyon Rd & S 8th St
City/County: Fort Dodge, Webster County
Time Period: 2004- May 2014 Crash Period = 10.5 years
Prepared by: OMV

NUMBER OF CRASHES

0	Fatal Crashes	0 fatalities	0 injuries
0	Major Injury Crashes		0 injuries
5	Minor Injury Crashes		5 injuries
11	Possible/Unknown Injury Crashes		14 injuries
49	Property Damage Only Crashes		
Totals: 65	Crashes	0 fatalities	19 injuries

CRASH RATES

Total Crash Rate =	65	/	78.57 MEV	=	0.83 Total Crashes/MEV
Fatal Crash Rate =	0	/	78.57 MEV	=	0.00 Fatal Crashes/MEV
Fatal/Injury Crash Rate =	16	/	78.57 MEV	=	0.20 F & I Crashes/MEV

CRASH FREQUENCY

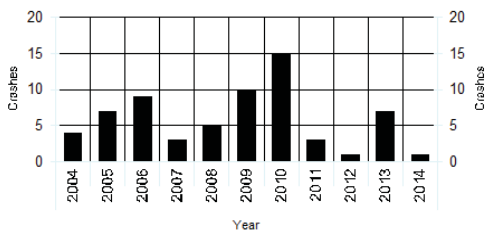

CRASH TYPE

2 Head-on	8 Sideswipe, Same Direction	Non Vehicle Collision Type	
27 Rear-end Crash	0 Sideswipe, Opposite Direction	0 Pedestrian	
7 Broadside/Right angle Crash	0 Parked	0 Bicycle	
6 Angle, Oncoming Left Turn	0 Other	13 Fixed Object	
0 Backing	0 Unknown	2 No Object Indicated	

TRAFFIC - AADT

North Approach =	6400
South Approach =	18100
East Approach =	16500
West Approach =	0
Million Entering Vehicles (MEV) =	78.57

Notes:
IDOT 2007 AADT

S 8th St and Kenyon Rd

2004 - 2014 Reportable Crashes

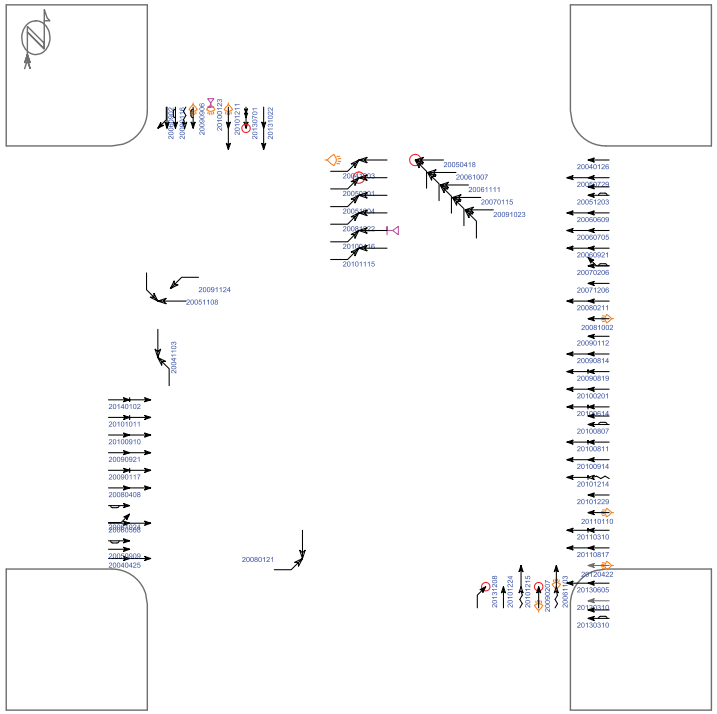

(0) crashes could not be placed in this schematic

Straight, Stopped, Unknown, Backing, Overtaking, Sideswipe, Parked, Erratic, Out of control, Right turn, Left turn, U-turn, Pedestrian, Bicycle, Injury, Fatality, Nighttime, DUI

Fixed objects: General, Signal, Tree, Pole, Curb, Animal

3rd vehicle, Extra data

Pd' Programming, Inc. 07/11/2014

Iowa Department of Transportation

Major Cause Summary

S 8th St and Kenyon Rd

Report Version 1.1 Jan 2005

Analysis Years: 2004 [4], 2005 [7], 2006 [9], 2007 [3], 2008 [5], 2009 [10], 2010 [15], 2011 [3], 2012 [1], 2013 [7], 2014 [1]

Crash Summary:

Fatal	-
Major Injury	-
Minor Injury	5
Possible/Unknown	11
PDO	49
Total Crashes	65

Injury Summary:

Fatal	-
Major Injury	-
Minor Injury	5
Possible	13
Unknown	1
Total Injuries	19

TOT Property Damage: $283,225

AVG Property Damage: $4,357

Surface Condition Summary:

Dry	33
Wet	11
Ice	2
Snow	18
Slush	1
Sand/Dirt/Oil/Gravel	-
Water	-
Other	-
Unknown	-
Not Reported	-
Total Crashes	65

Major Cause Summary:

1 Animal	Improper Backing
2 Ran Traffic Signal	Illegally Parked/Unattended
Ran Stop Sign	3 Swerving/Evasive Action
3 Crossed Centerline	1 Over-Correcting/Over-Steering
FTYROW: At Uncontrolled Intersection	Downhill Runaway
FTYROW: Making Right Turn on Red Signal	Equipment Failure
FTYROW: From Stop Sign	Separation of Units
FTYROW: From Yield Sign	5 Ran Off Road - Right
8 FTYROW: Making Left Turn	1 Ran Off Road - Straight
FTYROW: From Driveway	1 Ran Off Road - Left
FTYROW: From Parked Position	5 Lost Control
FTYROW: To Pedestrian	Inattentive/Distracted By: Passenger
FTYROW: Other (explain in narrative)	Inattentive/Distracted By: Use of Phone or Other
Traveling Wrong Way or on Wrong Side of Rd	Inattentive/Distracted By: Fallen Object
7 Driving Too Fast for Conditions	Inattentive/Distracted By: Fatigued/Asleep
Exceeded Authorized Speed	Other: Vision Obstructed
3 Made Improper Turn	Oversized Load/ Oversized Vehicle
Improper Lane Change	1 Cargo/Equipment Loss or Shift
6 Followed Too Close	6 Other: Other Improper Action
Disregarded Railroad Signal	5 Unknown
Disregarded Warning Sign	4 Other: No Improper Action
3 Operating Vehicle in Reckless/Aggressive Manner	None Indicated

Selection Filter:

None

Analyst: OMV

Notes: Radius = 150'

Iowa Department of Transportation

Driver and Time Summary

S 8th St and Kenyon Rd

Report Version 1.0 Aug 2006

Crash Time of Day Summary:

From / To	00:00 01:59	02:00 03:59	04:00 05:59	06:00 07:59	08:00 09:59	10:00 11:59	12:00 13:59	14:00 15:59	16:00 17:59	18:00 19:59	20:00 21:59	22:00 23:59	NR	Total	%
SUN	-	-	1	-	1	1	-	2	-	-	1	1	-	7	11
MON	-	-	-	-	2	2	4	4	2	-	1	-	-	15	23
TUE	-	-	-	2	2	-	4	-	1	1	-	-	-	10	15
WED	-	-	-	1	1	-	3	1	2	-	-	-	-	8	12
THU	-	-	-	-	1	-	2	1	-	1	-	-	-	5	8
FRI	-	-	-	1	-	2	1	2	3	1	1	-	-	11	17
SAT	2	-	-	-	1	1	3	1	1	-	-	-	-	9	14
Tot.	2		1	4	8	6	17	11	9	3	3	1		65	
%	3		2	6	12	9	26	17	14	5	5	2			100

Driver Age/Gender Summary:

Age	Male	Female	NR	Drivers	%
<14	-	-	-		
14	-	-	-		
15	-	-	-		
16	1	3	-	4	3
17	2	1	-	3	2
18	6	5	-	11	9
19	3	4	-	7	6
20	1	-	-	1	1
21 to 24	7	8	-	15	12
25 to 29	4	4	-	8	7
30 to 34	3	4	-	7	6
35 to 39	2	1	-	3	2
40 to 44	1	7	-	8	7
45 to 49	8	4	-	12	10
50 to 54	7	3	1	11	9
55 to 59	4	3	-	7	6
60 to 64	5	5	-	10	8
65 to 69	1	3	-	4	3
70 to 74	2	-	-	2	2
75 to 79	1	2	-	3	2
80 to 84	-	1	-	1	1
85 to 89	-	-	-		
90 to 94	-	-	-		
95 plus	-	-	-		
NR	-	-	3	3	2
Drivers	58	58	4	120	
%	48	48	3		100

Drug/Alcohol Summary:

	Total	%
Drug		
Alcohol, Less than Statutory		
Alcohol, Statutory	1	2
Drug/Alcohol, Less than Statutory		
Drug/Alcohol, Statutory		
Refused		
Under Influence of Alc/Drugs/Meds	1	2
None Indicated	63	97
Total Crashes	65	100

Fixed Object Struck Summary:

	Vehs.	%
Bridge/Bridge rail/Overpass	1	1
Underpass/Structure Support		
Culvert		
Ditch/Embankment	1	1
Curb/Island/Raised Median	3	2
Guardrail	1	1
Concrete Barrier		
Tree	1	1
Pole - Utility/Light/Etc	4	3
Sign Post	3	2
Mailbox		
Impact Attenuator		
Other Fixed Object		
None	106	88
Total Vehicles	120	100

Selection Filter:

None

Analyst: OMV

Notes: Radius = 150'

Intersection: 5th Ave S/Kenyon Rd & S 8th St ID#: 523

Lane Width	**Turn Lanes**
Approaching - No south approach N: 12 ft E/W: 12 ft through, E Rt Turn: 10 ft	Left turn lanes on N/W approaches Right turn lanes on E/N approaches
Sidewalk/ADA Ramps	**Lighting**
A 10' wide trail exists on the west side of S 8th St, north of Kenyon Rd to the bridge where it narrows. A 5' wide sidewalk extends north along the west side of S 8th St from the intersection. 5' wide sidewalks extend from the SE corner along 5th Ave S and south towards homes located below the Kenyon Rd bridge. 4' wide sidewalk exists along both streets in the NE corner. Each corner of the intersection has detectable warning panels. However, the some panels are showing signs of deterioration and should be replaced.	There are combination signal/lighting poles located in the NW and SE corners of the intersection. The lighting arm in the NW corner is rotated over S 8th St. There is street lighting on each approach to the intersection. The light poles and combination poles at the intersection utilize the City's decorative lighting arms and fixtures.
Parking	**Access/Driveways**
No parking existing along both streets	The nearest driveway is located in the NW corner of the intersection along S 8th St and is 250 ft away
Miscellaneous	
1. There are signs of pavement/curb deterioration near the curb ramps 2. The sidewalk towards the housing below the Kenyon Rd bridge has a steep grade. Considerations should be made to make it comply with ADA requirements.	

Cost Opinion

Intersection	Item	Period for Modification		
		Short-Term (0-2 Years)	Mid-Term (2-5 Years)	Long-Term (5-15 Years)
5th Ave S/ Kenyon Rd & S 8th St	Maintain Curb & Gutter at Sidewalk Ramps			$10,000
	ADA Sidewalk Improvements to Sidewalk into Park			$25,000
Total				$35,000

CLICK TO RETURN TO SIGNAL LOCATION MAP

5th Ave S & S 12th St ID#: 524

Intersection: 5th Ave S & S 12th St ID#: 524

Signal Evaluation	MUTCD Issues
1. Siemens Eagle M40 signal controller 2. Inductive loop detection with Detector System amplifiers 3. Protected/permissive left turn phasing on west approach (rest have permissive only) 4. Does have communication equipment and has fibers terminated within the distribution panel 5. Does not have battery back-up system	1. Have circular indications over left turn lane. Acceptable per previous MUTCD. Should be changed to flashing yellow arrow to comply with 2009 Edition. 2. Pedestrian signal heads should be replaced to include countdown timers. 3. When replacing street name signs, signs on mast arms shall have 12", upper and lowercase lettering 4. Update clearance (yellow and red) and pedestrian intervals to current standards of practice

Misc. Comments

1. At the time of the review (7/2/14), the signal pole in the SW corner did not have pedestrian signal heads or pushbuttons; the remaining corners did. These need to be installed on a pedestal pole closer to the intersection as it appears the signal pole was recently replaced and does not align with the crosswalks.
2. There is an advance mast arm on the north approach that identifies the right lane as a right turn only lane. This mast arm pole and footing can be replaced and the sign installed on the mast arm for that approach.
3. As long as the existing inductive loops continue to function, keep using them. Once they start to fail (other than the amplifiers), consider installing video detection to be consistent throughout the City.

Budget Needs

Intersection	Item	Period for Modification		
		Short-Term (0-2 Years)	Mid-Term (2-5 Years)	Long-Term (5-15 Years)
5th Ave S & S 12th St	Replace Pedestrian Pushbuttons and Signs	$2,400		
	Remove Sign Pole & Place Lane Control Signs on Mast Arm	$3,000		
	Implement Countdown Pedestrian Signals		$6,400	
	Install Video Detection		$35,000	
	Replace/Upgrade Controller and/or Cabinet			$20,000
	Implement Flashing Yellow Arrows			$30,000
	Annual Maintenance	$800	$1,200	$4,000
Total		$6,200	$42,600	$54,000

SIGNAL EQUIPMENT DATA

INTERSECTION: 5th Ave S & S 12th St

DATE: 7/2/2014

POWER: Underground

ZONE: 5

ADDRESS:

ID: 524

CONTROLLER:
BRAND: Eagle Traffic Controller
MODEL: EPAC3808M40

SOFTWARE VER: O.S #3.32d (SEP 00)

DETECTORS:
LOOP: Detetctor Systems

VIDEO: NONE

PUSHBUTTONS: Yes

POLE DATA

POLE NO.	POLE TYPE	POLE MATL.	TYPE OF BASE	ARM LENGTH / PEDSTL. HEIGHT		REMARKS
1	1	2	1	30		
2	2	2	1	36		
3	1	2	1	26		
4	3	2	1	30		Walk/Don't Walk signal is out
5	1	2	1	10		Right turn only sign

POLE TYPE
1. SINGLE MAST ARM
2. TWIN MAST ARM
3. COMBINATION
4. PEDESTAL
5. UTILITY
6. OTHER

POLE MATL.
1. ALUMINUM
2. STEEL
3. WOOD
4. OTHER

TYPE OF BASE
1. PLATE
2. STEEL TRANSFORMER
3. ALUM. TRANSFORMER

AUXILIARY EQUIPMENT

VIDEO: None

PRE-EMPTION

CONFLICT MONITOR: Traffic Control Technologies
CAT. NO. LMN12E

BATTERY BACK-UP: None

DETECTOR AMP: Detector Systems

COMMUNICATION

Photos: XXX-560

SIGNAL TIMING DATA

INTERSECTION: 5th Ave S & S 12th St
CONTROLLER: Eagle Traffic Controller
DATE: 7/2/2014 - Existing Timings

Basic Timing Data

	Ph1 -	Ph2 - EB	Ph3 -	Ph4 -N&S	Ph5 -EBL	Ph6 - WB	Ph7 -	Ph8 -
Min Grn	10	15	10	15	5	15	10	15
Passage	4.0	5.0	4.0	5.0	4.0	5.0	4.0	5.0
Max 1	25	35	25	35	25	35	25	35
Max 2	30	50	30	50	30	50	30	50
Yellow	4.0	4.0	4.0	4.0	4.0	4.0	4.0	4.0
Red Clr	1.0	1.0	1.0	1.0	1.0	1.0	1.0	1.0
Walk	0	7	0	7	0	7	0	7
Ped Clear	0	8	0	8	0	8	0	8
Recall		MAX				MAX		
Lock/Non								
Act/Non-Act		NON		NON		NON		NON

Coordination Plan Data

Dial 1/Split 1/2 Cycle: 68 Offset: 60

Phase	1	2	3	4	5	6	7	8
Time	0	44	0	24	12	32	0	0
Mode	6	1	6	0	0	1	6	6

Where: 0=

Active Periods:

Dial 2/Split 1 Cycle: Offset:

Phase	1	2	3	4	5	6	7	8
Time								
Mode								

Active Periods:

Dial 3/Split 1 Cycle: Offset:

Phase	1	2	3	4	5	6	7	8
Time								
Mode								

Active Periods:

Phasing

N

INDICATE NORTH

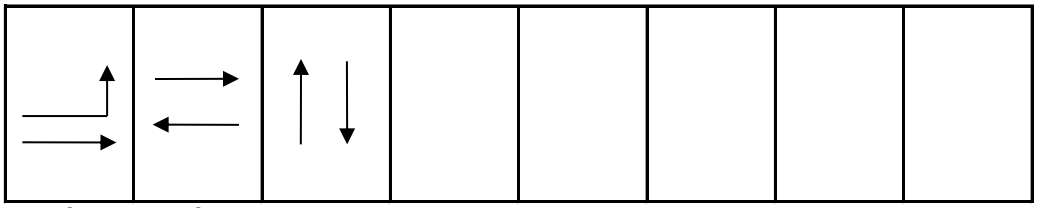

2 & 5 2 & 6 4

7/2/14

City of Fort Dodge

S 12th St + 5th Ave S

S24

Photos -56

SIGNAL LAYOUT

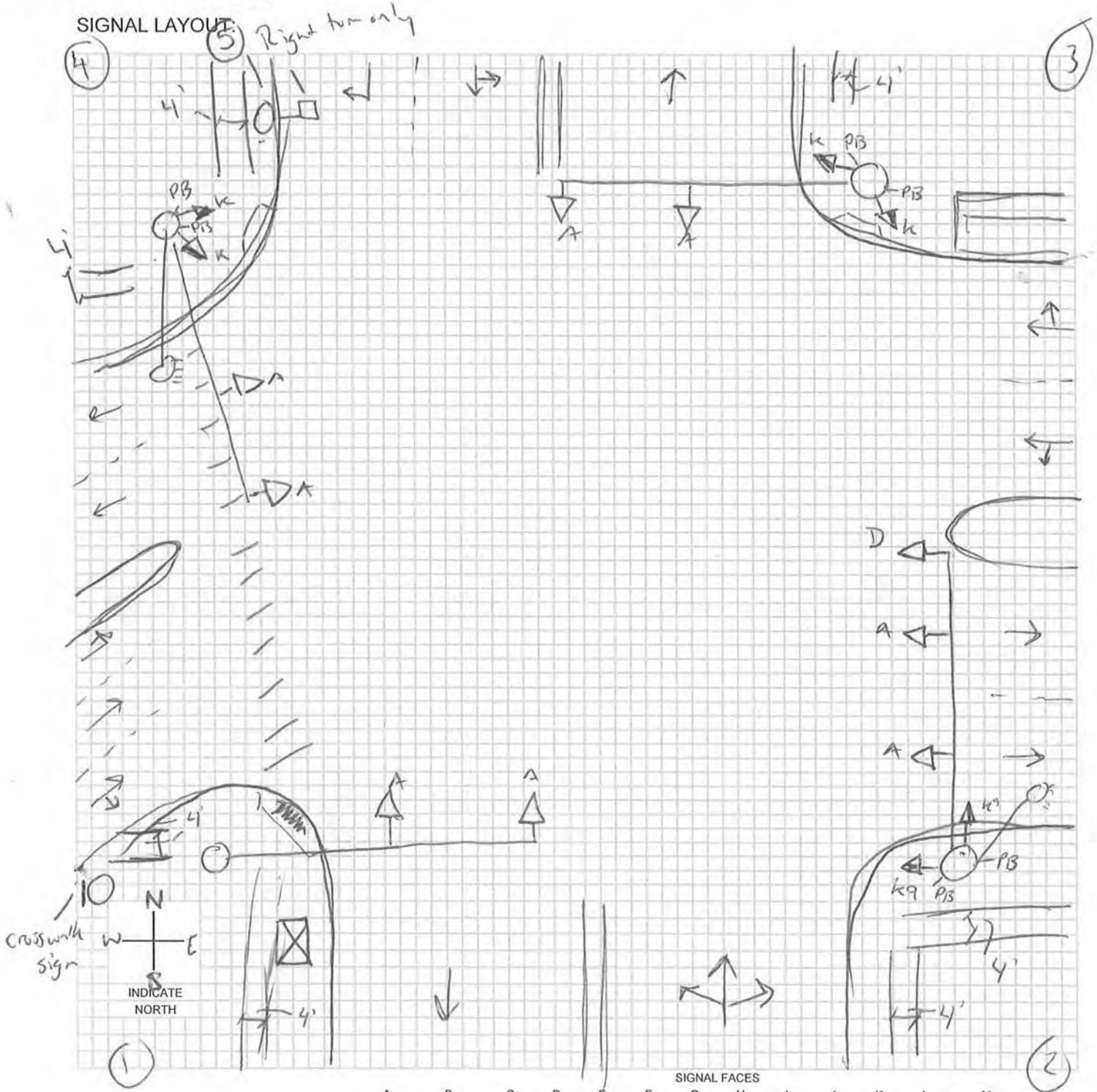

SIGNAL FACES

A	B	C	D	E	F	G	H	I	J	K	L	M	O
12 R	12 R	12 R	12 R	12 R	12 R	12 ◄R	12 ◄R	12 R	12 R	DW	W/DW	W DW	
12 Y	12 ◄Y / 12 Y	12 Y	12 Y	12 Y	12 ◄Y	12 ◄Y	12 ◄Y	12 Y	12 Y	W	CD		
12 G	12 ◄G / 12 G	12 G	12 G	12 ◄G	12 ◄G	12 ◄G	12 ◄FY	12 G	12 G			N: W CD DW	
		12 ◄G	12 Y				12 ◄G	12 G►	12 Y►				
			12 ◄G						12 G►				

LEGEND

- POLE & NUMBER
- SIGNAL INDICATION
- PEDESTRIAN SIGNAL INDICATION
- PB PUSHBUTTON
- 00-00-PD LOOP DECTETOR
- DISTANCE FROM STOP LINE - AREA OF DETECTION - PRESENCE PR; PULSE P; DELAY D; NO DELAY ND; EXTENSION E
- CONTROLLER
- METER
- VIDEO DET CAMERA

-* OPTICALLY PROGRAMMABLE

Intersection: 5th Ave S & S 12th St ID#: 524

Crash Summary	**Trends**
1. Crash rate is below the statewide average (0.70 crashes/MEV). 2. 16 of the 52 crashes were injury crashes. The most severe was minor injury crash. 3. Ran traffic signal (17%) and failure to yield right-of-way making left turn (13%) were reported most frequently as the major causes (19 crashes indicated the surface condition was wet, ice, snow, or slush). 4. Three vehicles were reported as striking a fixed object: pole (2) and curb/island/median (1) 5. 73% of the crashes occurred between 12 PM and 8 PM 6. 45% of the drivers involved in the crashes were under the age of 30.	1. Since January 2008, each year has experience 3 or 4 crashes per year; only 2011 had 7 crashes. Prior to 2008, the intersection experienced 28 crashes over the 4 years. 2. 46% of the crashes were rear-end crashes 3. Most of the crashes, even recently, involve a westbound vehicle.

Mitigation Options / Potential Improvements

1. Constructing a westbound right turn lane may reduce the potential for rear-end crashes on the east approach. A left turn lane on the same approach would be helpful, however, in 7 peak hours of traffic counting, only 10 vehicles made this left (where the right turn movement average 120 vehicles per hour over those same 7 hours).
2. Implement coordination timings will reduce the potential for rear-end collisions and drivers running the traffic signal.

Funding Potential

1. Beyond GO bonds, TSIP is a possible funding source. The site specific funding source could be a potential source, however, the low number of crashes and injuries decrease the funding potential.

Cost Opinion

Intersection	Item	Period for Modification		
		Short-Term (0-2 Years)	Mid-Term (2-5 Years)	Long-Term (5-15 Years)
5th Ave S & S 12th St	Construct WB Right Turn Lane *			$50,000
Total				$50,000

*- Does not include and ROW Acquisition

Intersection Crash Summary

Location:	5th Ave S & S 12th St		
City/County:	Fort Dodge, Webster County		
Time Period:	2004- May 2014	Crash Period =	10.5 years
Prepared by:	OMV		

NUMBER OF CRASHES

0	Fatal Crashes	0 fatalities	0 injuries
0	Major Injury Crashes		0 injuries
3	Minor Injury Crashes		3 injuries
13	Possible/Unknown Injury Crashes		22 injuries
36	Property Damage Only Crashes		
Totals: 52	Crashes	0 fatalities	25 injuries

CRASH RATES

Total Crash Rate =	52	/	73.97 MEV	=	0.70 Total Crashes/MEV
Fatal Crash Rate =	0	/	73.97 MEV	=	0.00 Fatal Crashes/MEV
Fatal/Injury Crash Rate =	16	/	73.97 MEV	=	0.22 F & I Crashes/MEV

CRASH FREQUENCY

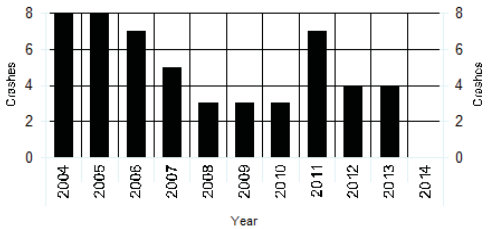

CRASH TYPE

2 Head-on	7 Sideswipe, Same Direction	Non Vehicle Collision Type	
24 Rear-end Crash	0 Sideswipe, Opposite Direction	0 Pedestrian	
10 Broadside/Right angle Crash	0 Parked	0 Bicycle	
6 Angle, Oncoming Left Turn	0 Other	2 Fixed Object	
0 Backing	1 Unknown		

TRAFFIC - AADT

North Approach =	4000
South Approach =	2000
East Approach =	16300
West Approach =	16300
Million Entering Vehicles (MEV) =	73.97

Notes:
Estimated from 2011

S 12th St and 5th Ave S

2004 - 2014 Reportable Crashes

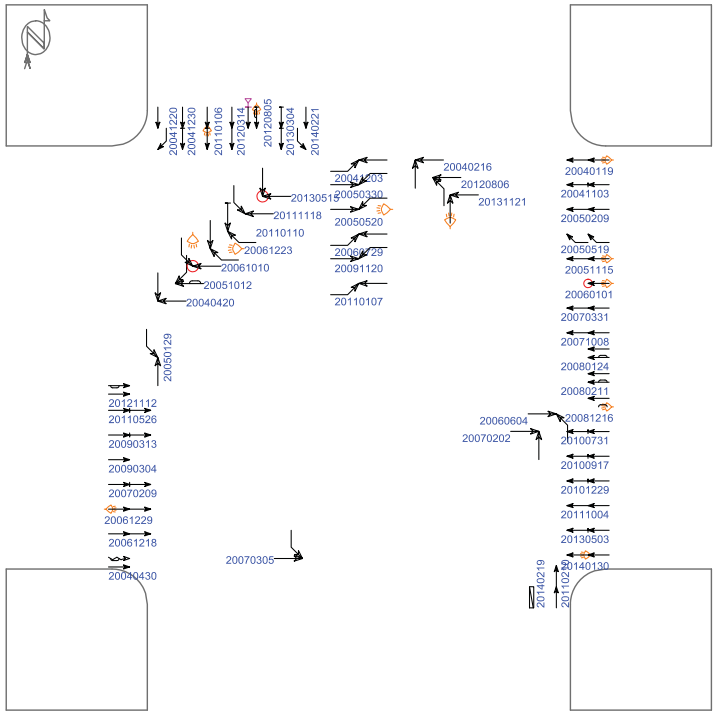

(1) crashes could not be placed in this schematic

Straight
Stopped
Unknown
Backing
Overtaking
Sideswipe

Parked
Erratic
Out of control
Right turn
Left turn
U-turn

Pedestrian
Bicycle
Injury
Fatality
Nighttime
DUI

Fixed objects:
General
Signal
Tree
Pole
Curb
Animal

3rd vehicle
Extra data

Pd' Programming, Inc. 07/11/2014

Iowa Department of Transportation

Major Cause Summary

S 12th St and Kenyon Rd

Report Version 1.1 Jan 2005

Analysis Years: 2004 [8], 2005 [8], 2006 [7], 2007 [5], 2008 [3], 2009 [3], 2010 [3], 2011 [7], 2012 [4], 2013 [4]

Crash Summary:

Fatal	-
Major Injury	-
Minor Injury	3
Possible/Unknown	13
PDO	36
Total Crashes	52

Injury Summary:

Fatal	-
Major Injury	-
Minor Injury	3
Possible	20
Unknown	2
Total Injuries	25

TOT Property Damage: $211,175

AVG Property Damage: $4,061

Surface Condition Summary:

Dry	29
Wet	10
Ice	2
Snow	7
Slush	2
Sand/Dirt/Oil/Gravel	-
Water	-
Other	-
Unknown	2
Not Reported	-
Total Crashes	52

Major Cause Summary:

	Animal		Improper Backing
9	Ran Traffic Signal		Illegally Parked/Unattended
	Ran Stop Sign		Swerving/Evasive Action
3	Crossed Centerline		Over-Correcting/Over-Steering
	FTYROW: At Uncontrolled Intersection		Downhill Runaway
	FTYROW: Making Right Turn on Red Signal		Equipment Failure
	FTYROW: From Stop Sign		Separation of Units
	FTYROW: From Yield Sign		Ran Off Road - Right
7	FTYROW: Making Left Turn		Ran Off Road - Straight
	FTYROW: From Driveway		Ran Off Road - Left
	FTYROW: From Parked Position	5	Lost Control
	FTYROW: To Pedestrian	2	Inattentive/Distracted By: Passenger
3	FTYROW: Other (explain in narrative)		Inattentive/Distracted By: Use of Phone or Other
	Traveling Wrong Way or on Wrong Side of Rd	1	Inattentive/Distracted By: Fallen Object
4	Driving Too Fast for Conditions	1	Inattentive/Distracted By: Fatigued/Asleep
1	Exceeded Authorized Speed		Other: Vision Obstructed
	Made Improper Turn		Oversized Load/ Oversized Vehicle
	Improper Lane Change	1	Cargo/Equipment Loss or Shift
3	Followed Too Close	8	Other: Other Improper Action
	Disregarded Railroad Signal	4	Unknown
	Disregarded Warning Sign		Other: No Improper Action
	Operating Vehicle in Reckless/Aggressive Manner		None Indicated

Selection Filter:

None

Analyst: OMV

Notes: Radius = 150'

Iowa Department of Transportation

Driver and Time Summary

S 12th St and Kenyon Rd

Report Version 1.0 Aug 2006

Crash Time of Day Summary:

From / To	00:00 01:59	02:00 03:59	04:00 05:59	06:00 07:59	08:00 09:59	10:00 11:59	12:00 13:59	14:00 15:59	16:00 17:59	18:00 19:59	20:00 21:59	22:00 23:59	NR	Total	%
SUN	1	1	-	-	-	-	-	-	1	-	-	-	-	3	6
MON	-	-	-	1	3	-	2	3	1	1	-	-	-	11	21
TUE	-	-	-	-	-	1	-	1	-	3	-	-	-	5	10
WED	-	-	-	-	-	2	2	2	3	-	-	-	-	9	17
THU	-	-	-	1	-	-	-	2	1	2	1	-	-	7	13
FRI	-	-	-	-	1	1	4	1	2	2	1	-	-	12	23
SAT	1	-	-	-	1	-	2	-	1	-	-	-	-	5	10
Tot.	2	1		2	5	4	10	9	9	8	2			52	
%	4	2		4	10	8	19	17	17	15	4				100

Driver Age/Gender Summary:

Age	Male	Female	NR	Drivers	%
<14	-	-	-		
14	-	-	-		
15	-	-	-		
16	-	5	-	5	5
17	1	3	-	4	4
18	4	4	-	8	7
19	2	7	-	9	8
20	4	3	-	7	6
21 to 24	4	4	-	8	7
25 to 29	4	4	-	8	7
30 to 34	4	3	-	7	6
35 to 39	4	3	-	7	6
40 to 44	4	4	-	8	7
45 to 49	2	3	-	5	5
50 to 54	4	5	-	9	8
55 to 59	3	3	-	6	6
60 to 64	5	2	-	7	6
65 to 69	2	-	-	2	2
70 to 74	1	-	-	1	1
75 to 79	1	1	-	2	2
80 to 84	1	1	-	2	2
85 to 89	-	1	-	1	1
90 to 94	-	-	-		
95 plus	-	-	-		
NR	-	-	2	2	2
Drivers	50	56	2	108	
%	46	52	2		100

Drug/Alcohol Summary:

	Total	%
Drug		
Alcohol, Less than Statutory	1	2
Alcohol, Statutory	1	2
Drug/Alcohol, Less than Statutory		
Drug/Alcohol, Statutory		
Refused	1	2
Under Influence of Alc/Drugs/Meds		
None Indicated	49	94
Total Crashes	52	100

Fixed Object Struck Summary:

	Vehs.	%
Bridge/Bridge rail/Overpass		
Underpass/Structure Support		
Culvert		
Ditch/Embankment		
Curb/Island/Raised Median	1	1
Guardrail		
Concrete Barrier		
Tree		
Pole - Utility/Light/Etc	2	2
Sign Post		
Mailbox		
Impact Attenuator		
Other Fixed Object		
None	105	97
Total Vehicles	108	100

Selection Filter:

None

Analyst: OMV

Notes: Radius = 150'

Intersection: 5th Ave S & S 12th St ID#: 524

Lane Width	**Turn Lanes**
Approaching N/S: 12 ft E/W: 12 ft	Left turn lane on W approach Right turn lane on N approach
Sidewalk/ADA Ramps	**Lighting**
4' wide sidewalks exist along both sides of each street on every approach. There are sidewalk ramps in all corners except for the SE corner. Only the SW corner has detectable warning panels.	There are combination signal/lighting poles located in the NW and SE corners of the intersection. Housings indicate 400 watt fixtures.
Parking	**Access/Driveways**
No parking existing along both streets near the intersection.	The nearest driveways are residential and located 50 ft south of the intersection
Miscellaneous	
1. There are signs of a previous parking lot in the NE corner of the intersection (driveway ramps). Remove these so no one mistakes these for parking spaces.	

Cost Opinion

Intersection	Item	Period for Modification		
		Short-Term (0-2 Years)	Mid-Term (2-5 Years)	Long-Term (5-15 Years)
5th Ave S & S 12th St	Repair Sidewalks & Ramps (ADA Compliant)		$2,500	
	Remove old parking lot accesses*			$10,000
Total			$2,500	$10,000

*- Will be accomplished if a right turn lane is constructed along 5th Ave S

CLICK TO RETURN TO SIGNAL LOCATION MAP

Intersection: 5th Ave S & S 15th St ID#: 525

Intersection: 5th Ave S & S 15th St ID#: 525

Signal Evaluation	**MUTCD Issues**
1. Siemens Eagle M40 signal controller 2. Inductive loop detection with Detector System amplifiers 3. Protected/permissive left turn phasing for E/W approaches - Permissive only N/S 4. Does have communication equipment and has fibers terminated within the distribution panel 5. Does not have battery back-up system	1. Have circular indications over left turn lanes. Acceptable per previous MUTCD. Should be changed to flashing yellow arrow to comply with 2009 Edition. 2. Pedestrian signal heads should be replaced to include countdown timers. 3. When replacing street name signs, signs on mast arms shall have 12", upper and lowercase lettering 4. Update clearance (yellow and red) and pedestrian intervals to current standards of practice
Misc. Comments	
1. The southbound left movement is heaviest movement from S 15th St. Consideration should be made to implement a protected/permissive left turn phasing for this movement. 2. As long as the existing inductive loops continue to function, keep using them. Once they start to fail (other than the amplifiers), consider installing video detection to be consistent throughout the City.	

Budget Needs

Intersection	Item	Period for Modification		
		Short-Term (0-2 Years)	Mid-Term (2-5 Years)	Long-Term (5-15 Years)
5th Ave S & S 15th St	Replace Pedestrian Pushbuttons and Signs	$2,400		
	Implement Countdown Pedestrian Signals		$6,400	
	Install Video Detection		$35,000	
	Replace/Upgrade Controller and/or Cabinet			$20,000
	Implement Flashing Yellow Arrows			$30,000
	Annual Maintenance	$800	$1,200	$4,000
Total		$3,200	$42,600	$54,000

SIGNAL EQUIPMENT DATA

INTERSECTION: 5th Ave S & S 15th St

DATE: 7/2/14

POWER: Underground

ZONE: 5

ID: 525

CONTROLLER:
BRAND: Eagle Traffic Control Systems
MODEL: EPAC 3808M40

SOFTWARE VER: OS # 3.32d (SEP 00)

DETECTORS:
LOOP: No detectors in ground that were visible

VIDEO: None

PUSHBUTTONS: Yes

POLE DATA

POLE NO.	POLE TYPE	POLE MATL.	TYPE OF BASE	ARM LENGTH / PEDSTL. HEIGHT		REMARKS
1	1	2	1	28		Push buttons are old
2	3	2	1	36		
3	1	2	1	24		
4	3	2	1	36		

POLE TYPE
1. SINGLE MAST ARM
2. TWIN MAST ARM
3. COMBINATION
4. PEDESTAL
5. UTILITY
6. OTHER

POLE MATL.
1. ALUMINUM
2. STEEL
3. WOOD
4. OTHER

TYPE OF BASE
1. PLATE
2. STEEL TRANSFORMER
3. ALUM. TRANSFORMER

AUXILIARY EQUIPMENT

VIDEO: None

PRE-EMPTION

CONFLICT MONITOR: Traffic Control Technologies
CAT. NO. LMN12E

BATTERY BACK-UP: None

DETECTOR AMP: Detector Systems 204 & 262CR

COMMUNICATION

SIGNAL TIMING DATA

INTERSECTION: 5th Ave S & S 15th St
CONTROLLER: Eagle Traffic Control Systems
DATE: 7/2/14 - Existing Timings

Basic Timing Data

	Ph1 -WBL	Ph2 - EB	Ph3 -	Ph4 - SB	Ph5 -EBL	Ph6 - WB	Ph7 -	Ph8 - NB
Min Grn	5	14	0	9	5	14	0	9
Passage	4.0	5.0	4.0	5.0	4.0	5.0	4.0	5.0
Max 1	12	15	0	15	12	15	0	15
Max 2	40	45	0	45	40	45	0	45
Yellow	3.5	4.1	3.0	4.1	3.5	4.1	3.0	4.1
Red Clr	1.0	2.0	1.0	1.0	1.0	2.0	1.0	1.0
Walk	0	8	0	5	0	8	0	5
Ped Clear	0	12	0	10	0	12	0	10
Recall		Min				Min		
Lock/Non	Non		Non	Non	Non		Non	Non
Act/Non-Act		Non		Non		Non		Non

Coordination Plan Data

Dial 1/Split 1 Cycle: 68 Offset:

Phase	1	2	3	4	5	6	7	8
Time	12	34	0	22	12	34	0	22
Mode	0	1	6	0	0	1	6	0

Active Periods:

Dial 2/Split 1 Cycle: Offset:

Phase	1	2	3	4	5	6	7	8
Time								
Mode								

Active Periods:

Dial 3/Split 1 Cycle: Offset:

Phase	1	2	3	4	5	6	7	8
Time								
Mode								

Active Periods:

Phasing

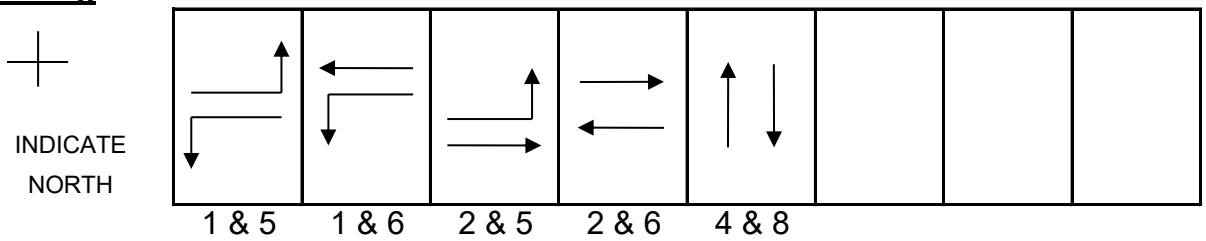

City of Fort Dodge

S 15th St + 5th Ave S

525

SIGNAL LAYOUT:

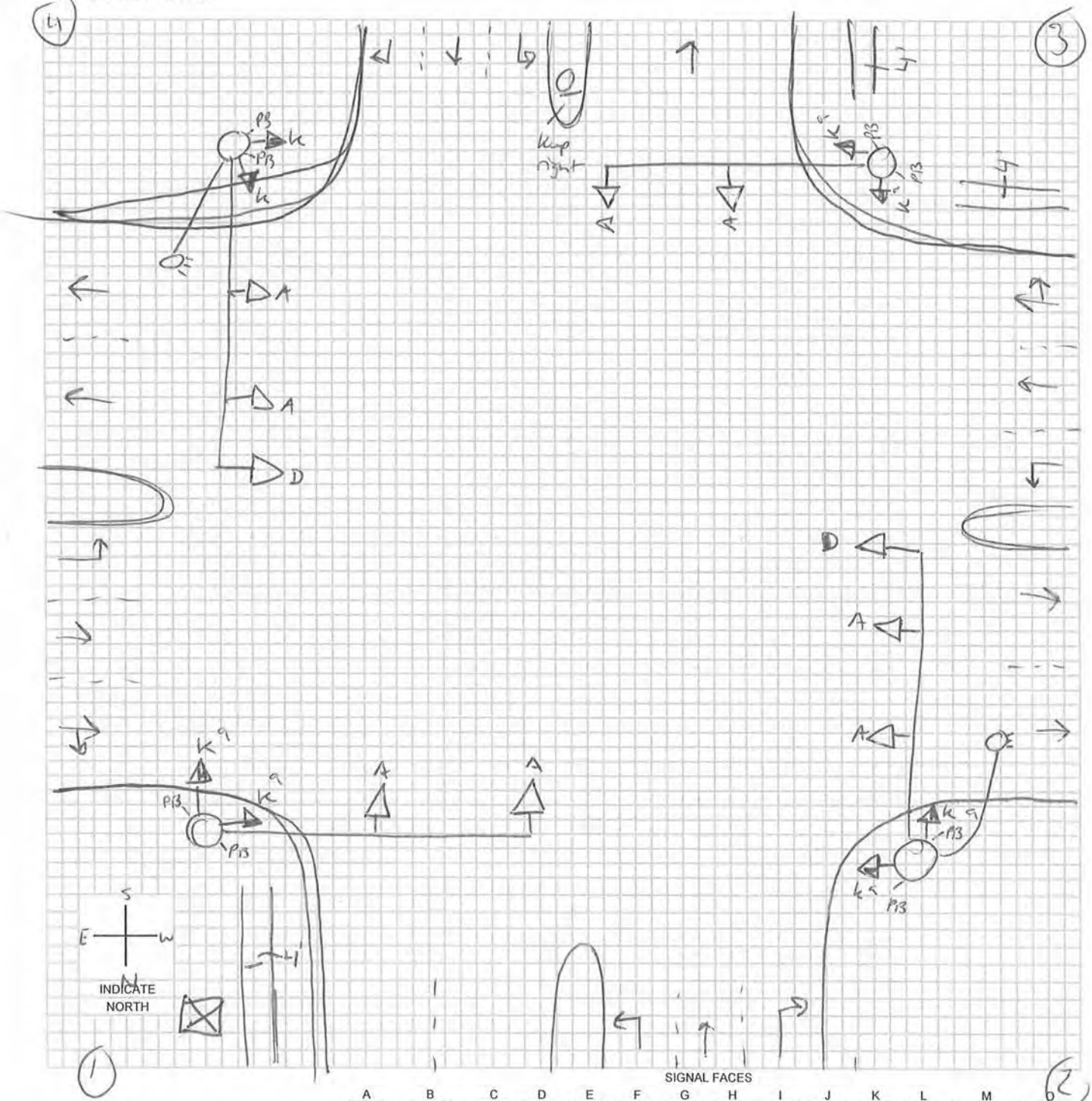

SIGNAL FACES

A	B	C	D	E	F	G	H	I	J	K	L	M	N	O
12 R	12 R	12 R	12 R	12 R	12 R	12 ◄R	12 ◄R	12 R	12 R	DW	W/DW	W DW		
12 Y	12 ◄Y / 12 Y	12 Y	12 Y	12 Y	12 ◄Y	12 ◄Y	12 ◄Y	12 Y	12 Y	W	CD			
12 G	12 ◄G / 12 G	12 G	12 G	12 ◄G	12 ◄G	12 ◄G	12 ◄FY	12 G	12 G				W CD DW	
		12 ◄G	12 ◄Y				12 ◄G	12 G►	12 Y►					
			12 ◄G						12 G►					

LEGEND

- (7) POLE & NUMBER
- SIGNAL INDICATION
- PEDESTRIAN SIGNAL INDICATION
- PB PUSHBUTTON
- 00-00-PD LOOP DECTETOR
- DISTANCE FROM STOP LINE - AREA OF DETECTION - PRESENCE PR; PULSE P; DELAY D; NO DELAY ND; EXTENSION E
- CONTROLLER
- (M) METER
- VIDEO DET CAMERA

-* OPTICALLY PROGRAMMABLE

Intersection: 5th Ave S & S 15th St ID#: 525

Crash Summary	**Trends**
1. Crash rate is above the statewide average (1.16 crashes/MEV). 2. 27 of the 96 crashes were injury crashes. There was a fatal crash in 2008 that occurred east of the intersection and was involving eastbound vehicles. 3. Ran traffic signal (18%) and failure to yield right-of-way making left turn (24%) were reported most frequently as the major causes (26 crashes indicated the surface condition was wet, ice, snow, or slush). 4. Two vehicles were reported as striking a fixed object: sign post (1) and curb/island/median (1) 5. 54% of the crashes occurred between 12 PM and 6 PM 6. 51% of the drivers involved in the crashes were under the age of 30.	1. Since January 2009, each year has experienced fewer than 10 crashes per year (32 total crashes; 0.8 crashes/MEV). Prior to 2009, the intersection experienced 64 crashes over the 5 years (at least 10 crashes per year). 2. 75% of the crashes were broadside/right angle, angle oncoming left turn, or rear-end crashes 3. Within the last 5 years, more crashes involved a westbound vehicle (more rear-end related crashes)
Mitigation Options / Potential Improvements	
1. Implement coordination timings will reduce the potential for rear-end collisions and drivers running the traffic signal.	
Funding Potential	
1. At this time, funding is only needed to implement coordination timings.	

Cost Opinion

Intersection	Item	Period for Modification		
		Short-Term (0-2 Years)	Mid-Term (2-5 Years)	Long-Term (5-15 Years)
5th Ave S & S 15th St	None			
Total				

Intersection Crash Summary

Location: 5th Ave S & S 15th St
City/County: Fort Dodge, Webster County
Time Period: 2004- May 2014 Crash Period = 10.5 years
Prepared by: OMV

NUMBER OF CRASHES

1	Fatal Crashes	1 fatalities	1 injuries
0	Major Injury Crashes		0 injuries
4	Minor Injury Crashes		4 injuries
22	Possible/Unknown Injury Crashes		29 injuries
69	Property Damage Only Crashes		
Totals: 96	Crashes	1 fatalities	34 injuries

CRASH RATES

Total Crash Rate =	96	/	82.82 MEV	=	1.16 Total Crashes/MEV
Fatal Crash Rate =	1	/	82.82 MEV	=	0.01 Fatal Crashes/MEV
Fatal/Injury Crash Rate =	27	/	82.82 MEV	=	0.33 F & I Crashes/MEV

CRASH FREQUENCY

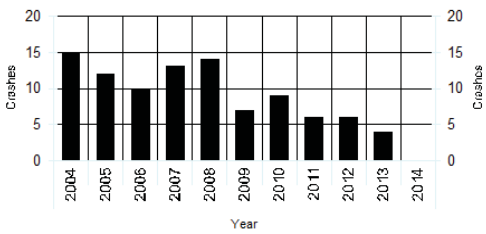

CRASH TYPE

7 Head-on	7 Sideswipe, Same Direction	Non Vehicle Collision Type	
23 Rear-end Crash	1 Sideswipe, Opposite Direction	0 Pedestrian	
25 Broadside/Right angle Crash	0 Parked	0 Bicycle	
24 Angle, Oncoming Left Turn	0 Other	2 Fixed Object	
0 Backing	0 Unknown	7 No Object Reported	

TRAFFIC - AADT

North Approach =	7400
South Approach =	3620
East Approach =	15900
West Approach =	16300
Million Entering Vehicles (MEV) =	82.82

Notes:
IDOT 2011 AADT

S 15th St and 5th Ave S

2004 - 2014 Reportable Crashes

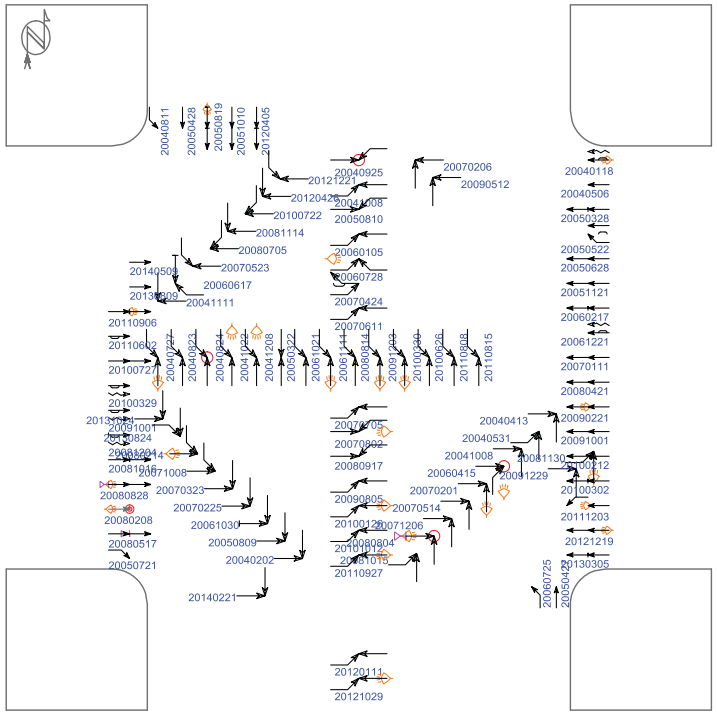

(0) crashes could not be placed in this schematic

Straight, Stopped, Unknown, Backing, Overtaking, Sideswipe, Parked, Erratic, Out of control, Right turn, Left turn, U-turn, Pedestrian, Bicycle, Injury, Fatality, Nighttime, DUI

Fixed objects: General, Signal, Tree, Pole, Curb, Animal

3rd vehicle, Extra data

Pd' Programming, Inc. 07/11/2014

Iowa Department of Transportation

Major Cause Summary

S 15th St and 5th Ave S

Report Version 1.1 Jan 2005

Analysis Years: 2004 [15], 2005 [12], 2006 [10], 2007 [13], 2008 [14], 2009 [7], 2010 [9], 2011 [6], 2012 [6], 2013 [4]

Crash Summary:

Fatal	1
Major Injury	-
Minor Injury	4
Possible/Unknown	22
PDO	69
Total Crashes	96

Injury Summary:

Fatal	1
Major Injury	-
Minor Injury	4
Possible	25
Unknown	4
Total Injuries	34

TOT Property Damage: $405,204

AVG Property Damage: $4,221

Surface Condition Summary:

Dry	70
Wet	12
Ice	3
Snow	8
Slush	3
Sand/Dirt/Oil/Gravel	-
Water	-
Other	-
Unknown	-
Not Reported	-
Total Crashes	96

Major Cause Summary:

	Animal		Improper Backing
17	Ran Traffic Signal		Illegally Parked/Unattended
	Ran Stop Sign		Swerving/Evasive Action
1	Crossed Centerline		Over-Correcting/Over-Steering
	FTYROW: At Uncontrolled Intersection		Downhill Runaway
	FTYROW: Making Right Turn on Red Signal		Equipment Failure
	FTYROW: From Stop Sign		Separation of Units
	FTYROW: From Yield Sign	1	Ran Off Road - Right
23	FTYROW: Making Left Turn		Ran Off Road - Straight
2	FTYROW: From Driveway		Ran Off Road - Left
	FTYROW: From Parked Position	1	Lost Control
1	FTYROW: To Pedestrian	2	Inattentive/Distracted By: Passenger
6	FTYROW: Other (explain in narrative)		Inattentive/Distracted By: Use of Phone or Other
	Traveling Wrong Way or on Wrong Side of Rd	1	Inattentive/Distracted By: Fallen Object
4	Driving Too Fast for Conditions		Inattentive/Distracted By: Fatigued/Asleep
	Exceeded Authorized Speed	1	Other: Vision Obstructed
4	Made Improper Turn		Oversized Load/ Oversized Vehicle
	Improper Lane Change		Cargo/Equipment Loss or Shift
7	Followed Too Close	11	Other: Other Improper Action
	Disregarded Railroad Signal	9	Unknown
	Disregarded Warning Sign	4	Other: No Improper Action
1	Operating Vehicle in Reckless/Aggressive Manner		None Indicated

Selection Filter:

None

Analyst: OMV

Notes: Radius = 150'

Iowa Department of Transportation

Driver and Time Summary

S 15th St and 5th Ave S

Report Version 1.0 Aug 2006

Crash Time of Day Summary:

From / To	00:00 01:59	02:00 03:59	04:00 05:59	06:00 07:59	08:00 09:59	10:00 11:59	12:00 13:59	14:00 15:59	16:00 17:59	18:00 19:59	20:00 21:59	22:00 23:59	NR	Total	%
SUN	1	-	-	-	-	-	-	2	-	-	1	-	-	4	4
MON	1	-	-	1	1	1	4	2	2	2	1	1	-	16	17
TUE	1	-	-	1	1	1	1	3	7	2	2	-	-	19	20
WED	-	-	-	-	-	1	1	2	4	1	1	-	-	10	10
THU	-	1	-	1	1	2	5	9	-	4	1	-	-	24	25
FRI	-	-	-	1	-	2	1	2	2	-	1	3	-	12	12
SAT	1	-	-	-	-	2	2	1	1	-	4	-	-	11	11
Tot.	4	1		4	3	9	14	21	16	9	11	4		96	
%	4	1		4	3	9	15	22	17	9	11	4			100

Driver Age/Gender Summary:

Age	Male	Female	NR	Drivers	%
<14	-	-	-		
14	-	-	-		
15	-	-	-		
16	4	8	-	12	6
17	5	2	-	7	4
18	9	5	-	14	7
19	6	3	-	9	5
20	4	5	-	9	5
21 to 24	10	14	-	24	13
25 to 29	11	10	-	21	11
30 to 34	6	7	-	13	7
35 to 39	5	1	-	6	3
40 to 44	1	5	-	6	3
45 to 49	2	7	-	9	5
50 to 54	8	6	-	14	7
55 to 59	3	5	-	8	4
60 to 64	5	4	-	9	5
65 to 69	4	1	-	5	3
70 to 74	2	2	-	4	2
75 to 79	3	-	-	3	2
80 to 84	2	1	-	3	2
85 to 89	-	1	-	1	1
90 to 94	1	-	-	1	1
95 plus	-	-	-		
NR	1	1	11	13	7
Drivers	92	88	11	191	
%	48	46	6		100

Drug/Alcohol Summary:

	Total	%
Drug		
Alcohol, Less than Statutory		
Alcohol, Statutory	2	2
Drug/Alcohol, Less than Statutory		
Drug/Alcohol, Statutory		
Refused	1	1
Under Influence of Alc/Drugs/Meds		
None Indicated	93	97
Total Crashes	96	100

Fixed Object Struck Summary:

	Vehs.	%
Bridge/Bridge rail/Overpass		
Underpass/Structure Support		
Culvert		
Ditch/Embankment		
Curb/Island/Raised Median	1	1
Guardrail		
Concrete Barrier		
Tree		
Pole - Utility/Light/Etc		
Sign Post	1	1
Mailbox		
Impact Attenuator		
Other Fixed Object		
None	189	99
Total Vehicles	191	100

Selection Filter:

None

Analyst: OMV

Notes: Radius = 150'

Intersection: 5th Ave S & S 15th St ID#: 525

Lane Width	**Turn Lanes**
Approaching N/S: 12 ft E/W: 12 ft	Left turn lanes on N/S/E/W approaches Right turn lanes on N/S approaches
Sidewalk/ADA Ramps	**Lighting**
4' wide sidewalks exist along both sides of each street on every approach. There are sidewalk ramps in all corners, however, no corner has detectable warning panels.	There are combination signal/lighting poles located in the NW and SE corners of the intersection. Housings indicate 400 watt fixtures.
Parking	**Access/Driveways**
No parking existing along both streets near the intersection.	There are commercial driveways close to the intersection in the NW corner along both streets. There is an additional commercial driveway located 60 ft east of the intersection (north side). There is one residential driveway in the SW corner (west of the intersection) only 50 ft away.
Miscellaneous	
1. Medians and signing show indications of vehicles driving over them. Reconstruct medians to allow for easier turning of vehicles (large vehicles in particular).	

Cost Opinion

Intersection	Item	Period for Modification		
		Short-Term (0-2 Years)	Mid-Term (2-5 Years)	Long-Term (5-15 Years)
5th Ave S & S 15th St	Repair Sidewalks & Ramps (ADA Compliant)		$2,500	
	Reconstruct Medians for Turning Paths & Pedestrians			$2,500
Total			$2,500	$2,500

CLICK TO RETURN TO SIGNAL LOCATION MAP

5th Ave S & S 17th St ID#: 526

Intersection: 5th Ave S & S 17th St ID#: 526

Signal Evaluation	MUTCD Issues
1. Siemens Eagle M40 signal controller 2. Inductive loop detection with Detector System amplifiers 3. Permissive left turn phasing for all approaches 4. Does have communication equipment and has fibers terminated within the distribution panel 5. Does not have battery back-up system	1. Pedestrian signal heads should be replaced to include countdown timers. 2. There are two lane approaches along S 17th St with pavement markings designating lane control, but no signing associated with the movements 3. When replacing street name signs, signs on mast arms shall have 12", upper and lowercase lettering 4. Update clearance (yellow and red) and pedestrian intervals to current standards of practice

Misc. Comments

1. Pushbuttons are showing signs of age and should be replaced. Replace pedestrian signs at same time.
2. As long as the existing inductive loops continue to function, keep using them. Once they start to fail (other than the amplifiers), consider installing video detection to be consistent throughout the City.

Budget Needs

Intersection	Item	Period for Modification		
		Short-Term (0-2 Years)	Mid-Term (2-5 Years)	Long-Term (5-15 Years)
5th Ave S & S 17th St	Install lane control signs N/S	$1,000		
	Replace Pedestrian Pushbuttons and Signs	$2,400		
	Implement Countdown Pedestrian Signals		$6,400	
	Install Video Detection		$35,000	
	Replace/Upgrade Controller and/or Cabinet			$20,000
	Implement Flashing Yellow Arrows			$30,000
	Annual Maintenance	$800	$1,200	$4,000
Total		$4,200	$42,600	$54,000

SIGNAL EQUIPMENT DATA

INTERSECTION: 5th Ave S & S 17th St

DATE: 7/8/14

POWER: Underground

ZONE: 5

ADDRESS:

ID: 526

CONTROLLER:
BRAND: Eagle Traffic Control Systems
MODEL: EPAC 3808M40

SOFTWARE VER:

DETECTORS:
LOOP: Detector Systems

VIDEO: None

PUSHBUTTONS: Yes

POLE DATA

POLE NO.	POLE TYPE	POLE MATL.	TYPE OF BASE	ARM LENGTH / PEDSTL. HEIGHT		REMARKS
1	3	2	1	28		Push buttons old
2	1	2	1	24		Push buttons old
3	3	2	1	28		Walk signal facing west hard to read, possibly out
4	1	2	1	24		

POLE TYPE
1. SINGLE MAST ARM
2. TWIN MAST ARM
3. COMBINATION
4. PEDESTAL
5. UTILITY
6. OTHER

POLE MATL.
1. ALUMINUM
2. STEEL
3. WOOD
4. OTHER

TYPE OF BASE
1. PLATE
2. STEEL TRANSFORMER
3. ALUM. TRANSFORMER

AUXILIARY EQUIPMENT

VIDEO: None

PRE-EMPTION:

CONFLICT MONITOR: Traffic Controls Technologies LMN23E

BATTERY BACK-UP: None

DETECTOR AMP: Detector System 204 and 262CR

COMMUNICATION:

SIGNAL TIMING DATA

INTERSECTION: 5th Ave S & S 17th St

CONTROLLER: Eagle Traffic Control Systems

DATE: 7/8/14 - Existing Timings

Basic Timing Data

	Ph1 -	Ph2 -	Ph3 -	Ph4 - SB	Ph5 -	Ph6 -	Ph7 -	Ph8 - NB
Min Grn	10	15	10	15	10	15	10	15
Passage	4.0	5.0	4.0	5.0	4.0	5.0	4.0	5.0
Max 1	25	35	25	15	25	35	25	15
Max 2	30	50	30	50	30	50	30	50
Yellow	4.0	4.0	4.0	4.0	4.0	4.0	4.0	4.0
Red Clr	1.0	1.0	1.0	1.0	1.0	1.0	1.0	1.0
Walk	0	7	0	7	0	7	0	7
Ped Clear	0	8	0	8	0	8	0	8
Recall		MAX		MIN		MAX		MIN
Lock/Non	LOCK							
Act/Non-Act		NA		NA		NA		NA

Coordination Plan Data

Dial 1/Split 1 Cycle: 68 Offset:

Phase	1	2	3	4	5	6	7	8
Time	0	41	0	27	0	41	0	27
Mode	ACT	COORD	ACT	ACT	ACT	COORD	ACT	ACT

Active Periods:

Dial 2/Split 1 Cycle: Offset:

Phase	1	2	3	4	5	6	7	8
Time								
Mode								

Active Periods:

Dial 3/Split 1 Cycle: Offset:

Phase	1	2	3	4	5	6	7	8
Time								
Mode								

Active Periods:

Phasing

N

INDICATE NORTH

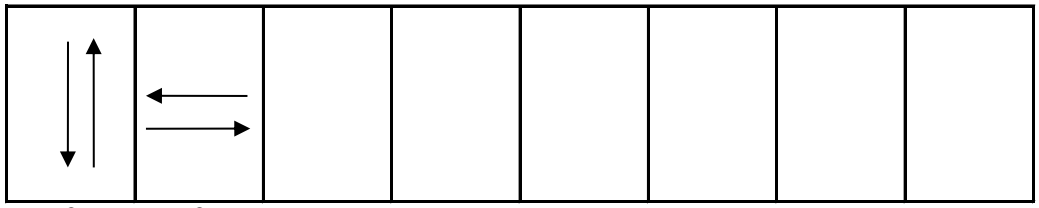

4 & 8 2 & 6

City of Fort Dodge

SIGNAL LAYOUT: S 17th St & 5th Ave S

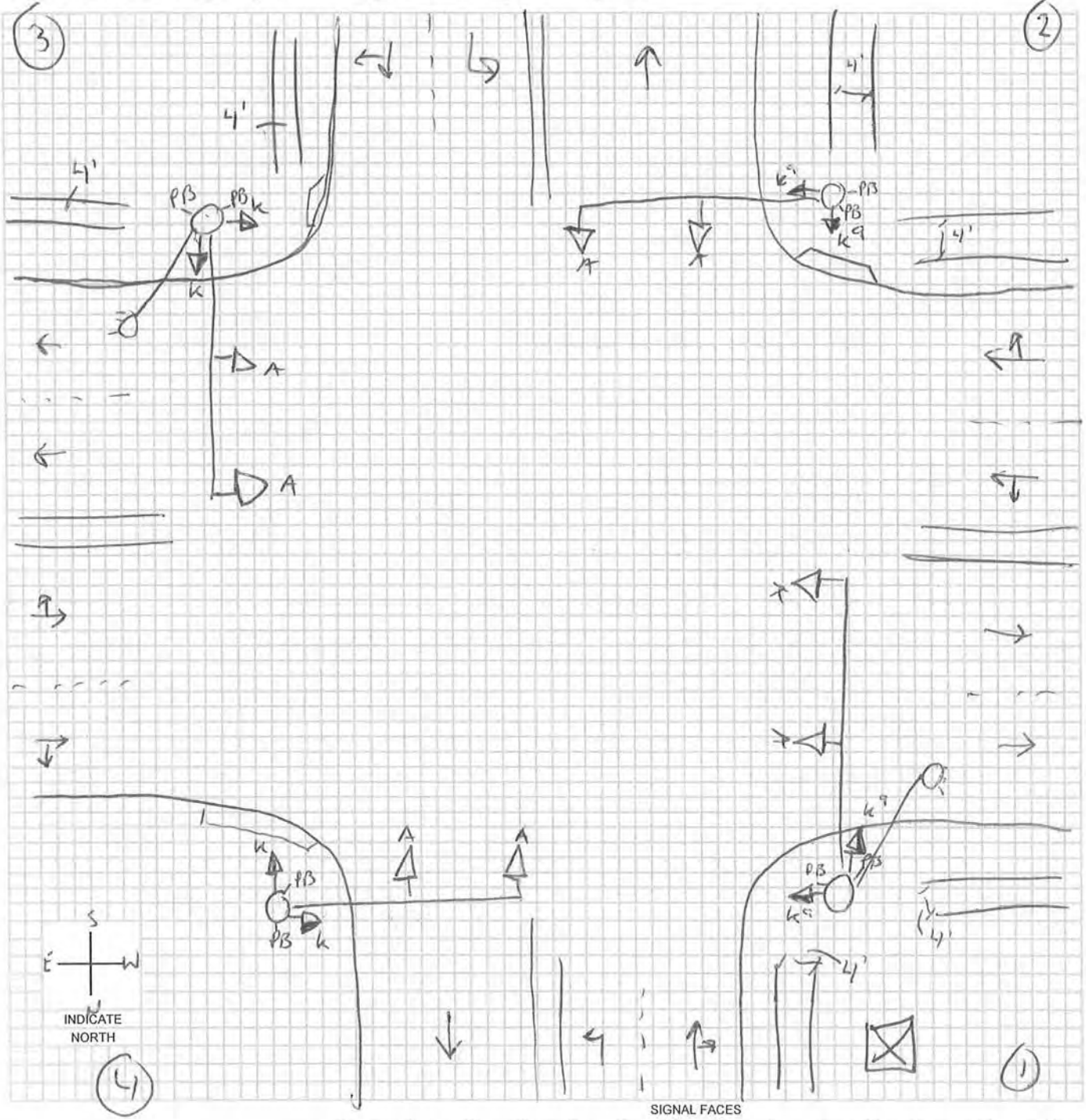

SIGNAL FACES

A	B	C	D	E	F	G	H	I	J	K	L	M	O
12 R	12 R	12 R	12 R	12 R	12 R	◄R	◄R	12 R	12 R	DW	W/DW	W DW	
12 Y	◄Y 12 Y	12 Y	12 Y	12 Y	12 Y	◄Y	◄Y	12 Y	12 Y	W	CD		
12 G	◄G 12 G	12 G	12 G	◄G	◄G	◄G	◄FY	12 G	12 G			N: W CD DW	
		12 G	12 Y				12 G	G►	12 Y►				
			12 G						12 G►				

LEGEND

- (7) POLE & NUMBER
- SIGNAL INDICATION
- PEDESTRIAN SIGNAL INDICATION
- PB PUSHBUTTON
- 00-00-PD LOOP DECTETOR
- DISTANCE FROM STOP LINE - AREA OF DETECTION - PRESENCE PR; PULSE P; DELAY D; NO DELAY ND; EXTENSION E
- CONTROLLER
- (M) METER
- VIDEO DET CAMERA

-* OPTICALLY PROGRAMMABLE

Intersection: 5th Ave S & S 17th St ID#: 526

Crash Summary	**Trends**
1. Crash rate is at the statewide average (0.90 crashes/MEV). 2. 19 of the 47 crashes were injury crashes. The most severe crashes were minor injury crashes. 3. Ran traffic signal (40%) and followed too close (26%) were reported most frequently as the major causes (24 crashes indicated the surface condition was wet, ice, snow, or slush). 4. No fixed objects were struck 5. 64% of the crashes occurred between 12 PM and 6 PM 6. 44% of the drivers involved in the crashes were under the age of 30.	1. The intersection experienced between 5 and 11 crashes each year except for 2011 and 2012 which had 3 crashes each year. 2. 55% of the crashes were rear-end crashes and an additional 30% were broadside/right angle crashes 3. Westbound vehicles were involved in more crashes, including the last 5 years

Mitigation Options / Potential Improvements

1. Implement coordination timings will reduce the potential for rear-end collisions and drivers running the traffic signal.
2. Construction of E/W left turn lanes could reduce the potential for rear-end and angle, oncoming left turn related crashes. However, not many vehicles perform these maneuvers during the peak hours.

Funding Potential

1. At this time, funding is only needed to implement coordination timings.
2. TSIP may be an opportunity for funding for construction of the E/W left turn lanes. The left turn lane widening should happen from S 16th St to S 20th St, completing construction of left turn lanes from S 15th St to S 42nd St. TSIP funding may be possible if the crash history along the necessary corridor indicate left turn lanes would help reduce the potential for crashes.

Cost Opinion

Intersection	Item	Period for Modification		
		Short-Term (0-2 Years)	Mid-Term (2-5 Years)	Long-Term (5-15 Years)
5th Ave S & S 17th St	Construct E/W Left Turn Lanes *			$500,000
Total				$500,000

*- Does not include ROW Acquisition

Intersection Crash Summary

Location:	5th Ave S & S 17th St		
City/County:	Fort Dodge, Webster County		
Time Period:	2004- May 2014	Crash Period =	10.5 years
Prepared by:	OMV		

NUMBER OF CRASHES

0	Fatal Crashes	0 fatalities	0	injuries
0	Major Injury Crashes		0	injuries
4	Minor Injury Crashes		5	injuries
15	Possible/Unknown Injury Crashes		24	injuries
47	Property Damage Only Crashes			
Totals: 66	Crashes	0 fatalities	29	injuries

CRASH RATES

Total Crash Rate =	66	/	73.01 MEV	=	0.90 Total Crashes/MEV
Fatal Crash Rate =	0	/	73.01 MEV	=	0.00 Fatal Crashes/MEV
Fatal/Injury Crash Rate =	19	/	73.01 MEV	=	0.26 F & I Crashes/MEV

CRASH FREQUENCY

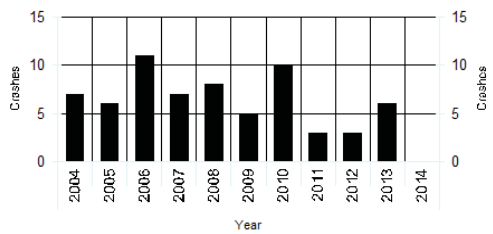

CRASH TYPE

1	Head-on	5	Sideswipe, Same Direction		Non Vehicle Collision Type
36	Rear-end Crash	0	Sideswipe, Opposite Direction	0	Pedestrian
20	Broadside/Right angle Crash	0	Parked	0	Bicycle
3	Angle, Oncoming Left Turn	0	Other	0	Fixed Object
0	Backing	0	Unknown	1	No Object Reported

TRAFFIC - AADT

North Approach =	3500
South Approach =	2800
East Approach =	15900
West Approach =	15900
Million Entering Vehicles (MEV) =	73.01

Notes:
2007 & 2011 DOT Counts

S 17th St and 5th Ave S

2004 - 2014 Reportable Crashes

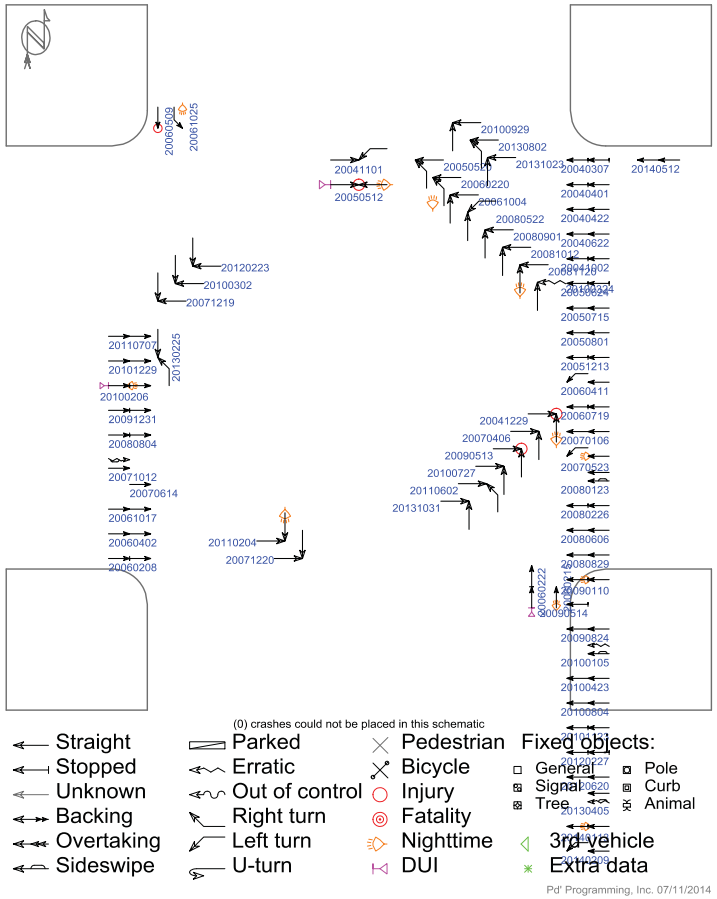

(0) crashes could not be placed in this schematic

Straight	Parked	Pedestrian	Fixed objects:
Stopped	Erratic	Bicycle	General / Pole
Unknown	Out of control	Injury	Signal / Curb
Backing	Right turn	Fatality	Tree / Animal
Overtaking	Left turn	Nighttime	3rd vehicle
Sideswipe	U-turn	DUI	Extra data

Pd' Programming, Inc. 07/11/2014

Iowa Department of Transportation

Major Cause Summary

S 17th St and 5th Ave S

Report Version 1.1 Jan 2005

Analysis Years: 2004 [7], 2005 [6], 2006 [11], 2007 [7], 2008 [8], 2009 [5], 2010 [10], 2011 [3], 2012 [3], 2013 [6]

Crash Summary:

Fatal	-
Major Injury	-
Minor Injury	4
Possible/Unknown	15
PDO	47
Total Crashes	66

Injury Summary:

Fatal	-
Major Injury	-
Minor Injury	5
Possible	20
Unknown	4
Total Injuries	29

TOT Property Damage: $277,605

AVG Property Damage: $4,206

Surface Condition Summary:

Dry	42
Wet	16
Ice	4
Snow	4
Slush	-
Sand/Dirt/Oil/Gravel	-
Water	-
Other	-
Unknown	-
Not Reported	-
Total Crashes	66

Major Cause Summary:

	Animal		Improper Backing
19	Ran Traffic Signal		Illegally Parked/Unattended
	Ran Stop Sign	2	Swerving/Evasive Action
3	Crossed Centerline		Over-Correcting/Over-Steering
	FTYROW: At Uncontrolled Intersection		Downhill Runaway
	FTYROW: Making Right Turn on Red Signal		Equipment Failure
	FTYROW: From Stop Sign		Separation of Units
	FTYROW: From Yield Sign		Ran Off Road - Right
2	FTYROW: Making Left Turn		Ran Off Road - Straight
	FTYROW: From Driveway		Ran Off Road - Left
	FTYROW: From Parked Position	2	Lost Control
	FTYROW: To Pedestrian	1	Inattentive/Distracted By: Passenger
4	FTYROW: Other (explain in narrative)	2	Inattentive/Distracted By: Use of Phone or Other
	Traveling Wrong Way or on Wrong Side of Rd		Inattentive/Distracted By: Fallen Object
5	Driving Too Fast for Conditions		Inattentive/Distracted By: Fatigued/Asleep
	Exceeded Authorized Speed	2	Other: Vision Obstructed
	Made Improper Turn		Oversized Load/ Oversized Vehicle
	Improper Lane Change		Cargo/Equipment Loss or Shift
12	Followed Too Close	6	Other: Other Improper Action
	Disregarded Railroad Signal	4	Unknown
	Disregarded Warning Sign	2	Other: No Improper Action
	Operating Vehicle in Reckless/Aggressive Manner		None Indicated

Selection Filter:

None

Analyst: OMV

Notes: Radius = 150'

Iowa Department of Transportation

Driver and Time Summary

S 17th St and 5th Ave S

Report Version 1.0 Aug 2006

Crash Time of Day Summary:

From / To	00:00 01:59	02:00 03:59	04:00 05:59	06:00 07:59	08:00 09:59	10:00 11:59	12:00 13:59	14:00 15:59	16:00 17:59	18:00 19:59	20:00 21:59	22:00 23:59	NR	Total	%
SUN	-	-	-	-	-	1	1	-	-	1	-	-	-	3	5
MON	-	-	-	-	-	-	1	4	2	1	-	-	-	8	12
TUE	-	-	-	1	2	-	1	2	4	-	-	-	-	10	15
WED	-	1	-	-	1	3	3	4	2	1	2	-	-	17	26
THU	-	-	-	-	-	2	2	-	5	1	2	-	-	12	18
FRI	-	-	-	-	-	1	2	5	1	2	-	-	-	11	17
SAT	-	-	-	-	-	-	1	1	1	2	-	-	-	5	8
Tot.		1		1	3	7	11	16	15	8	4			66	
%		2		2	5	11	17	24	23	12	6				100

Driver Age/Gender Summary:

Age	Male	Female	NR	Drivers	%
<14	-	-	-		
14	-	1	-	1	1
15	1	1	-	2	1
16	4	2	-	6	4
17	4	1	-	5	4
18	6	4	-	10	7
19	3	4	-	7	5
20	1	2	-	3	2
21 to 24	5	6	-	11	8
25 to 29	7	10	-	17	12
30 to 34	2	1	-	3	2
35 to 39	2	1	-	3	2
40 to 44	9	7	-	16	11
45 to 49	4	2	-	6	4
50 to 54	6	4	-	10	7
55 to 59	6	3	-	9	6
60 to 64	6	3	-	9	6
65 to 69	4	1	-	5	4
70 to 74	1	1	-	2	1
75 to 79	-	1	-	1	1
80 to 84	3	5	-	8	6
85 to 89	-	-	-		
90 to 94	-	-	-		
95 plus	-	-	-		
NR	-	-	7	7	5
Drivers	74	60	7	141	
%	52	43	5		100

Drug/Alcohol Summary:

	Total	%
Drug		
Alcohol, Less than Statutory		
Alcohol, Statutory	3	5
Drug/Alcohol, Less than Statutory		
Drug/Alcohol, Statutory		
Refused		
Under Influence of Alc/Drugs/Meds		
None Indicated	63	95
Total Crashes	66	100

Fixed Object Struck Summary:

	Vehs.	%
Bridge/Bridge rail/Overpass		
Underpass/Structure Support		
Culvert		
Ditch/Embankment		
Curb/Island/Raised Median		
Guardrail		
Concrete Barrier		
Tree		
Pole - Utility/Light/Etc		
Sign Post		
Mailbox		
Impact Attenuator		
Other Fixed Object		
None	141	100
Total Vehicles	141	100

Selection Filter:

None

Analyst: OMV

Notes: Radius = 150'

Intersection: 5th Ave S & S 17th St ID#: 526

Lane Width	**Turn Lanes**
Approaching N/S: 11 ft E/W: 12 ft	Left turn lanes on N/S approaches (negative offset) No right turn lanes
Sidewalk/ADA Ramps	**Lighting**
4' wide sidewalks exist along both sides of each street on every approach. There are sidewalk ramps in all corners, however, only the NW corner has detectable warning panels. The signal cabinet and pole in the NW corner are within the sidewalk and are obstructions	There are combination signal/lighting poles located in the NW and SE corners of the intersection. Housings indicate 400 watt fixtures.
Parking	**Access/Driveways**
No parking existing along both streets near the intersection, however, there is no signing indicating no parking along S 17th St.	There are commercial driveways close to the intersection in the NW & NE corners along S 17th St. There is an additional commercial driveway located 60 ft west of the intersection (south side).

Miscellaneous

1. The pavement markings for the N/S left turn lanes could be adjusted to align the left turn lanes for better visibility if/when multiple vehicles are turning left. Minimal changes would be required to the signal if the signal heads are located over the lane lines. If signal heads directly over the center of the lanes are required, then a signal pole would have to be replaced.
2. To remove the signal cabinet and pole from obstructions within the sidewalk, additional right-of-way or permanent easements will need to be acquired from the neighboring property.

Cost Opinion

Intersection	Item	Period for Modification		
		Short-Term (0-2 Years)	Mid-Term (2-5 Years)	Long-Term (5-15 Years)
5th Ave S & S 17th St	Install No Parking signs N/S of intersection	$1,200		
	Repair Sidewalks & Ramps (ADA Compliant)		$2,500	
	Revise Pavement Markings to align N/S left turn lanes *			$8,000
Total		$1,200	$2,500	$8,000

*- Does not include signal modifications to align signal heads with lanes

CLICK TO RETURN TO SIGNAL LOCATION MAP

5th Ave S & S 21st St ID#: 527

SIGNAL EQUIPMENT DATA

INTERSECTION: 5th Ave S & S 21st St

DATE: 7/8/14

POWER: Underground

ZONE: 5

ADDRESS:

ID: 527

CONTROLLER:
BRAND: Eagle Traffic Control Systems
MODEL: EPAC 3808M42

SOFTWARE VER: OS # 3.32d (SEP 00)

DETECTORS:
LOOP: No

VIDEO: Iteris Vantage Plus

PUSHBUTTONS: Yes

POLE DATA

POLE NO.	POLE TYPE	POLE MATL.	TYPE OF BASE	ARM LENGTH / PEDSTL. HEIGHT		REMARKS
1	3	2	2	45		All have cameras on top of lightpoles as part of the combination arm
2	3	2	2	30		
3	3	2	2	45		
4	3	2	2	30		

POLE TYPE
1. SINGLE MAST ARM
2. TWIN MAST ARM
3. COMBINATION
4. PEDESTAL
5. UTILITY
6. OTHER

POLE MATL.
1. ALUMINUM
2. STEEL
3. WOOD
4. OTHER

TYPE OF BASE
1. PLATE
2. STEEL TRANSFORMER
3. ALUM. TRANSFORMER

AUXILIARY EQUIPMENT

VIDEO: Iteris Vantage Plus

PRE-EMPTION:

CONFLICT MONITOR: Peek Traffic Double Diamond

BATTERY BACK-UP: Yes but we couldn't open it

DETECTOR AMP:

COMMUNICATION: Yes

Has an interconnection to the highway traffic controller from the railroad grade crossing signal system providing simultaneous premption

R.R. Milepost 7.53

DOT Inventory #- 196543H

Intersection: 5th Ave S & S 21st St ID#: 527

Signal Evaluation	**MUTCD Issues**
1. Siemens Eagle M40 signal controller 2. Iteris Vantage Plus video detection 3. Protected/permissive left turn phasing for all approaches 4. Does have communication equipment and has fibers terminated within the distribution panel 5. Does have battery back-up system 6. Signal is connected to the railroad crossing. Railroad preempt is active in the controller.	1. Have circular indications over left turn lanes. Acceptable per previous MUTCD. Should be changed to flashing yellow arrow to comply with 2009 Edition. 2. Pedestrian signal heads should be replaced to include countdown timers. 3. When replacing street name signs, signs on mast arms shall have 12", upper and lowercase lettering 4. Update clearance (yellow and red) and pedestrian intervals to current standards of practice
Misc. Comments	
1. Consider replacing pedestrian pushbuttons. Replace pedestrian signs at same time.	

Budget Needs

Intersection	Item	Period for Modification		
		Short-Term (0-2 Years)	Mid-Term (2-5 Years)	Long-Term (5-15 Years)
5th Ave S & S 21st St	Replace Pedestrian Pushbuttons and Signs	$2,400		
	Implement Countdown Pedestrian Signals		$6,400	
	Replace/Upgrade Controller and/or Cabinet			$20,000
	Implement Flashing Yellow Arrows			$30,000
	Annual Maintenance	$800	$1,200	$4,000
Total		$3,200	$7,600	$54,000

SIGNAL TIMING DATA

INTERSECTION: 5th Ave S & S 21st St
CONTROLLER: Eagle Traffic Control Systems
DATE: 7/8/14 - Existing Timings

Basic Timing Data

	Ph1 -EBL	Ph2 - WB	Ph3 -NBL	Ph4 -SB	Ph5 -WBL	Ph6 -EB	Ph7 -SBL	Ph8 -NB
Min Grn	15	15	5	10	5	15	5	10
Passage	5.0	5.0	5.0	5.0	5.0	5.0	5.0	5.0
Max 1	20	45	20	30	20	45	20	20
Max 2	15	45	10	30	15	45	10	30
Yellow	3.0	4.5	3.0	4.0	3.0	4.5	3.0	4.0
Red Clr	0.5	1.0	0.5	1.0	0.5	1.0	0.5	1.0
Walk	0	7	0	7	0	7	0	7
Ped Clear	0	10	0	10	0	10	0	10
Recall		MAX		MIN		MIN		MIN
Lock/Non	NON		NON	NON	NON		NON	NON
Act/Non-Act	ACT	ACT	ACT	ACT	ACT	ACT	ACT	ACT

Coordination Plan Data

NOT IN COORDINATION

Dial 1/Split 1 Cycle: Offset:

Phase	1	2	3	4	5	6	7	8
Time								
Mode								

Active Periods:

Dial 2/Split 1 Cycle: Offset:

Phase	1	2	3	4	5	6	7	8
Time								
Mode								

Active Periods:

Dial 3/Split 1 Cycle: Offset:

Phase	1	2	3	4	5	6	7	8
Time								
Mode								

Active Periods:

Phasing

N

INDICATE NORTH

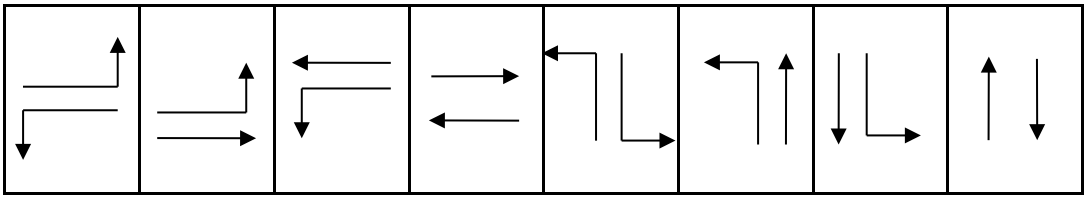

1 & 5 | 1 & 6 | 2 & 5 | 2 & 6 | 3 & 7 | 3 & 8 | 4 & 7 | 4 & 8

City of Fort Dodge

SIGNAL LAYOUT: S 21st St & 5th Ave S

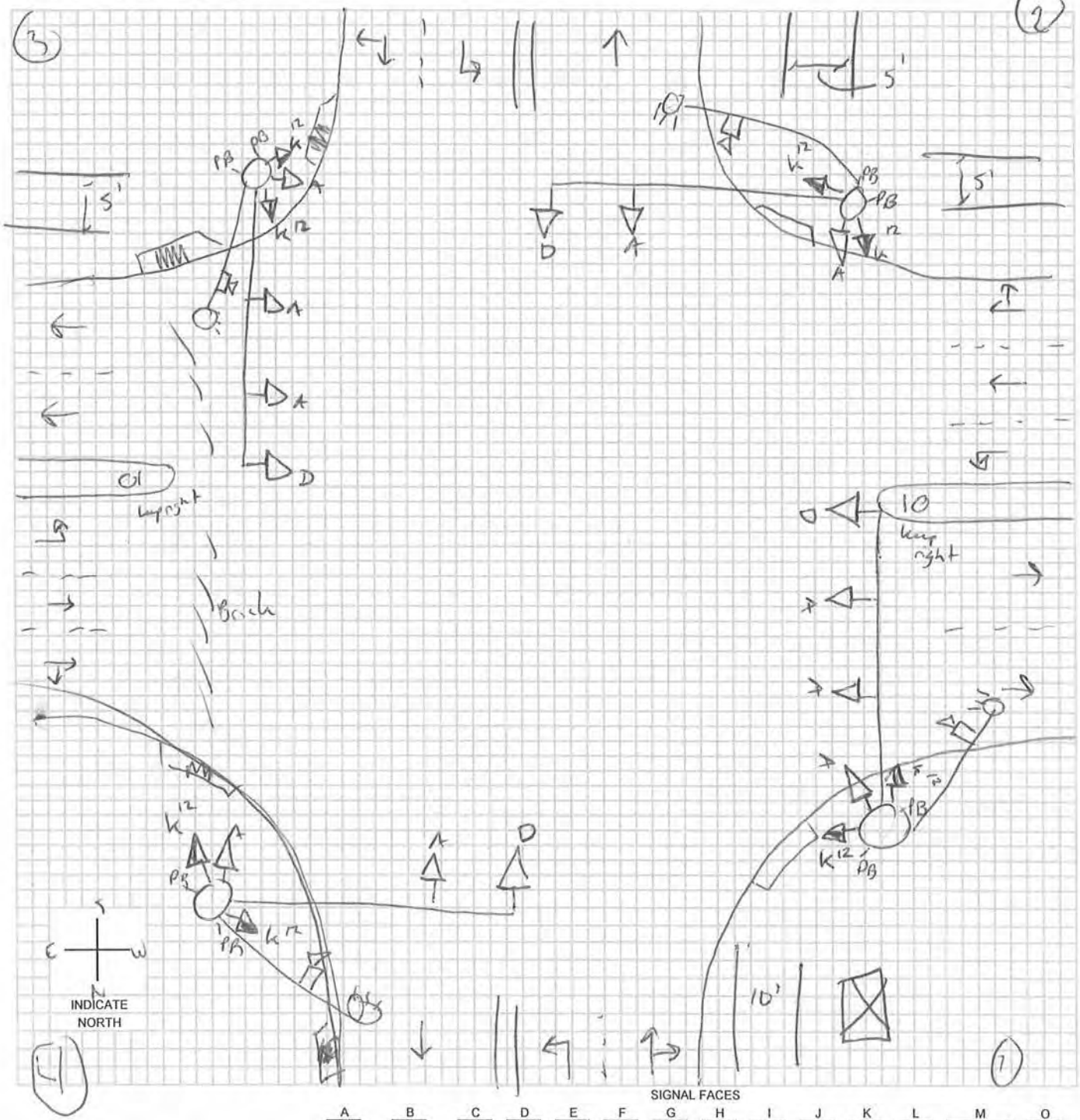

SIGNAL FACES

A	B	C	D	E	F	G	H	I	J	K	L	M	O
12 R	12 R	12 R	12 R	12 R	12 R	12 ◄R	12 ◄R	12 R	12 R	DW	W/DW	W DW	
12 Y	12 ◄Y / 12 Y	12 Y	12 Y	12 Y	12 Y	12 ◄Y	12 ◄Y	12 Y	12 Y	W	CD		
12 G	12 ◄G / 12 G	12 G	12 G	12 ◄G	12 ◄G	12 ◄G	12 ◄FY	12 G	12 G			N: W CD DW	
		12 ◄G	12 Y				12 ◄G	12 G►	12 Y►				
			12 ◄G						12 G►				

LEGEND

- (7) POLE & NUMBER
- SIGNAL INDICATION
- PEDESTRIAN SIGNAL INDICATION
- PB PUSHBUTTON
- 00-00-PD LOOP DECTETOR
- DISTANCE FROM STOP LINE - AREA OF DETECTION - PRESENCE PR; PULSE P; DELAY D; NO DELAY ND; EXTENSION E
- CONTROLLER
- (M) METER
- VIDEO DET CAMERA

-* OPTICALLY PROGRAMMABLE

Intersection: 5th Ave S & S 21st St ID#: 527

Crash Summary	**Trends**
1. Crash rate is at the statewide average (0.92 crashes/MEV). 2. 16 of the 69 crashes were injury crashes. The most severe crashes were minor injury crashes. 3. Followed too close (19%), driving too fast for conditions (13%), and ran traffic signal (12%) were reported most frequently as the major causes (22 crashes indicated the surface condition was wet, ice, snow, or slush). 4. No fixed objects were struck 5. 55% of the crashes occurred between 12 PM and 6 PM 6. 37% of the drivers involved in the crashes were under the age of 30.	1. From 2004 through 2008, the intersection experienced 44 total crashes (9 crashes per year average). From 2009 through 2013, it experienced 25 crashes (5 crashes per year average). 2. 67% of the crashes were rear-end crashes 3. There is not a consistent pattern of a direction having more crashes than others.

Mitigation Options / Potential Improvements

1. Implement coordination timings will reduce the potential for rear-end collisions and drivers running the traffic signal.
2. Align the north/south left turn lanes so the line up across from each other, this will improve the vision of drivers and reduce the potential for a collision between through and opposing left turning vehicles. Some signal modifications may be necessary to maintain a signal head over each lane.
3. Other intersection improvements were made in 2011.

Funding Potential

1. At this time, funding is only needed to implement coordination timings.
2. The recent reduction in crashes and few injuries makes applying for TSIP funding unlikely

Cost Opinion

Intersection	Item	Period for Modification		
		Short-Term (0-2 Years)	Mid-Term (2-5 Years)	Long-Term (5-15 Years)
5th Ave S & S 21st St	Revise Pavement Markings to align N/S Left Turn Lanes			$5,000
Total				$5,000

Intersection Crash Summary

Location: 5th Ave S & S 21st St
City/County: Fort Dodge, Webster County
Time Period: 2004- May 2014 Crash Period = 10.5 years
Prepared by: OMV

NUMBER OF CRASHES

0	Fatal Crashes	0 fatalities	0 injuries
0	Major Injury Crashes		0 injuries
4	Minor Injury Crashes		4 injuries
12	Possible/Unknown Injury Crashes		16 injuries
53	Property Damage Only Crashes		
Totals: 69	Crashes	0 fatalities	20 injuries

CRASH RATES

Total Crash Rate =	69	/	74.73 MEV	=	0.92 Total Crashes/MEV
Fatal Crash Rate =	0	/	74.73 MEV	=	0.00 Fatal Crashes/MEV
Fatal/Injury Crash Rate =	16	/	74.73 MEV	=	0.21 F & I Crashes/MEV

CRASH FREQUENCY

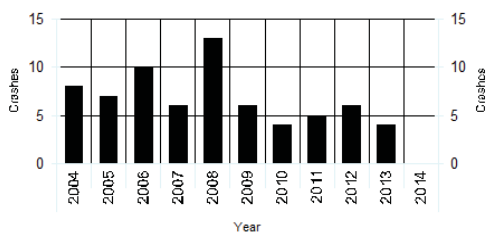

CRASH TYPE

0	Head-on	4	Sideswipe, Same Direction	Non Vehicle Collision Type	
46	Rear-end Crash	4	Sideswipe, Opposite Direction	0	Pedestrian
10	Broadside/Right angle Crash	0	Parked	0	Bicycle
3	Angle, Oncoming Left Turn	0	Other	0	Fixed Object
0	Backing	0	Unknown	2	No Object Reported

TRAFFIC - AADT

North Approach =	4000
South Approach =	5000
East Approach =	15000
West Approach =	15000
Million Entering Vehicles (MEV) =	74.73

Notes:
Estimated from 2011 Counts

S 21st St and 5th Ave S

2004 - 2014 Reportable Crashes

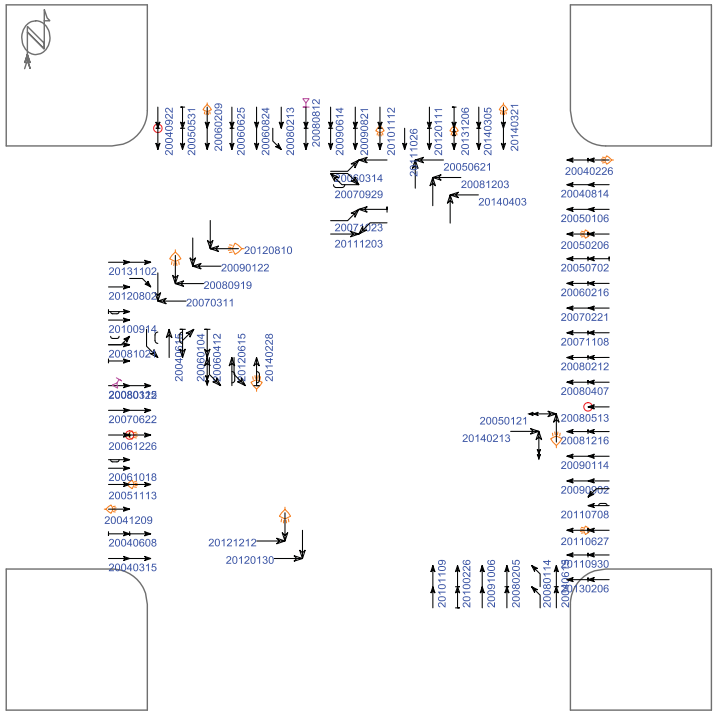

(1) crashes could not be placed in this schematic

Straight, Stopped, Unknown, Backing, Overtaking, Sideswipe, Parked, Erratic, Out of control, Right turn, Left turn, U-turn, Pedestrian, Bicycle, Injury, Fatality, Nighttime, DUI

Fixed objects: General, Signal, Tree, Pole, Curb, Animal

3rd vehicle, Extra data

Pd' Programming, Inc. 07/14/2014

Iowa Department of Transportation

Major Cause Summary

S 21st St and 5th Ave S

Report Version 1.1 Jan 2005

Analysis Years: 2004 [8], 2005 [7], 2006 [10], 2007 [6], 2008 [13], 2009 [6], 2010 [4], 2011 [5], 2012 [6], 2013 [4]

Crash Summary:

Fatal	-
Major Injury	-
Minor Injury	4
Possible/Unknown	12
PDO	53
Total Crashes	69

Injury Summary:

Fatal	-
Major Injury	-
Minor Injury	4
Possible	15
Unknown	1
Total Injuries	20

TOT Property Damage: $215,078

AVG Property Damage: $3,117

Surface Condition Summary:

Dry	45
Wet	11
Ice	4
Snow	6
Slush	1
Sand/Dirt/Oil/Gravel	1
Water	-
Other	-
Unknown	-
Not Reported	1
Total Crashes	69

Major Cause Summary:

	Animal		Improper Backing
8	Ran Traffic Signal		Illegally Parked/Unattended
	Ran Stop Sign		Swerving/Evasive Action
3	Crossed Centerline		Over-Correcting/Over-Steering
	FTYROW: At Uncontrolled Intersection		Downhill Runaway
	FTYROW: Making Right Turn on Red Signal		Equipment Failure
	FTYROW: From Stop Sign		Separation of Units
	FTYROW: From Yield Sign		Ran Off Road - Right
3	FTYROW: Making Left Turn		Ran Off Road - Straight
	FTYROW: From Driveway	1	Ran Off Road - Left
	FTYROW: From Parked Position	2	Lost Control
	FTYROW: To Pedestrian	1	Inattentive/Distracted By: Passenger
1	FTYROW: Other (explain in narrative)	2	Inattentive/Distracted By: Use of Phone or Other
	Traveling Wrong Way or on Wrong Side of Rd	1	Inattentive/Distracted By: Fallen Object
9	Driving Too Fast for Conditions	1	Inattentive/Distracted By: Fatigued/Asleep
	Exceeded Authorized Speed		Other: Vision Obstructed
1	Made Improper Turn		Oversized Load/ Oversized Vehicle
	Improper Lane Change	1	Cargo/Equipment Loss or Shift
13	Followed Too Close	14	Other: Other Improper Action
	Disregarded Railroad Signal	5	Unknown
	Disregarded Warning Sign	1	Other: No Improper Action
1	Operating Vehicle in Reckless/Aggressive Manner	1	None Indicated

Selection Filter:

None

Analyst: OMV

Notes: Radius = 150'

Iowa Department of Transportation

Driver and Time Summary

S 21st St and 5th Ave S

Report Version 1.0 Aug 2006

Crash Time of Day Summary:

From / To	00:00 01:59	02:00 03:59	04:00 05:59	06:00 07:59	08:00 09:59	10:00 11:59	12:00 13:59	14:00 15:59	16:00 17:59	18:00 19:59	20:00 21:59	22:00 23:59	NR	Total	%
SUN	-	-	-	-	-	-	-	2	2	1	-	-	-	5	7
MON	-	-	-	-	2	-	-	1	1	-	1	-	-	5	7
TUE	1	-	-	-	6	2	3	5	3	-	-	-	-	20	29
WED	-	-	-	1	-	2	3	3	1	2	1	-	-	13	19
THU	-	-	-	-	1	-	-	4	2	1	1	-	-	9	13
FRI	-	-	-	-	1	-	-	-	3	4	1	2	-	11	16
SAT	-	-	-	-	1	-	2	1	2	-	-	-	-	6	9
Tot.	1			1	11	4	8	16	14	8	4	2		69	
%	1			1	16	6	12	23	20	12	6	3			100

Driver Age/Gender Summary:

Age	Male	Female	NR	Drivers	%
<14	-	-	-		
14	1	-	-	1	1
15	-	-	-		
16	4	-	-	4	3
17	3	1	-	4	3
18	2	4	-	6	4
19	3	3	-	6	4
20	1	2	-	3	2
21 to 24	10	6	-	16	11
25 to 29	6	6	-	12	9
30 to 34	3	2	-	5	4
35 to 39	6	3	-	9	6
40 to 44	7	5	-	12	9
45 to 49	12	3	-	15	11
50 to 54	6	6	-	12	9
55 to 59	4	5	-	9	6
60 to 64	3	-	-	3	2
65 to 69	2	2	-	4	3
70 to 74	2	3	-	5	4
75 to 79	-	3	-	3	2
80 to 84	1	2	-	3	2
85 to 89	1	-	-	1	1
90 to 94	-	-	-		
95 plus	-	-	-		
NR	-	1	6	7	5
Drivers	77	57	6	140	
%	55	41	4		100

Drug/Alcohol Summary:

	Total	%
Drug		
Alcohol, Less than Statutory		
Alcohol, Statutory		
Drug/Alcohol, Less than Statutory		
Drug/Alcohol, Statutory		
Refused		
Under Influence of Alc/Drugs/Meds	2	3
None Indicated	67	97
Total Crashes	69	100

Fixed Object Struck Summary:

	Vehs.	%
Bridge/Bridge rail/Overpass		
Underpass/Structure Support		
Culvert		
Ditch/Embankment		
Curb/Island/Raised Median		
Guardrail		
Concrete Barrier		
Tree		
Pole - Utility/Light/Etc		
Sign Post		
Mailbox		
Impact Attenuator		
Other Fixed Object		
None	140	100
Total Vehicles	140	100

Selection Filter:

None

Analyst: OMV

Notes: Radius = 150'

Intersection: 5th Ave S & S 21st St ID#: 527

Lane Width	**Turn Lanes**
Approaching N/S: 11 ft E/W: 12 ft	Left turn lanes on N/S/E/W approaches. The painted N/S turn lanes have a negative offset No right turn lanes
Sidewalk/ADA Ramps	**Lighting**
5' wide sidewalks exist along both sides of each street on every approach. There are sidewalk ramps in all corners, and only the NW corner does not have detectable warning panels.	There are combination signal/lighting poles located in all corners of the intersection. There is street lighting on the east approach to the intersection. The light poles and combination poles at the intersection utilize the City's decorative lighting arms and fixtures.
Parking	**Access/Driveways**
No parking existing along both streets near the intersection, however, there is no signing indicating no parking along S 21st St.	There are commercial driveways within 50 ft of the intersection on the east side of S 21st St. Other commercial driveways are at least 125 ft from the intersection.

Miscellaneous

1. An at-grade railroad crossing exists approximately 200 ft east of the intersection. The gated crossing is connected to the traffic signal.
2. The pavement markings for the N/S left turn lanes could be adjusted to align the left turn lanes for better visibility if/when multiple vehicles are turning left. Minimal changes would be required to the signal if the signal heads are located over the lane lines. If signal heads directly over the center of the lanes are required, then a signal pole would have to be replaced.
3. The signal pole footings in each corner of the intersection extend above the adjacent sidewalk. They are obstructions to walking paths in all but the SW corner. There are sufficient paved surfaces around the pole footings that someone in a wheelchair could get around them. If the traffic signal is reconstructed, replace the footings with ones that are flush to the sidewalk surface.

Cost Opinion

Intersection	Item	Period for Modification		
		Short-Term (0-2 Years)	Mid-Term (2-5 Years)	Long-Term (5-15 Years)
5th Ave S & S 21st St	Repair Sidewalks & Ramps (ADA Compliant)		$2,500	
	Replace Pole Footings to be Flush with Sidewalk			$15,000
Total			$2,500	$15,000

CLICK TO RETURN TO SIGNAL LOCATION MAP

5th Ave S & S 25th St ID#: 528

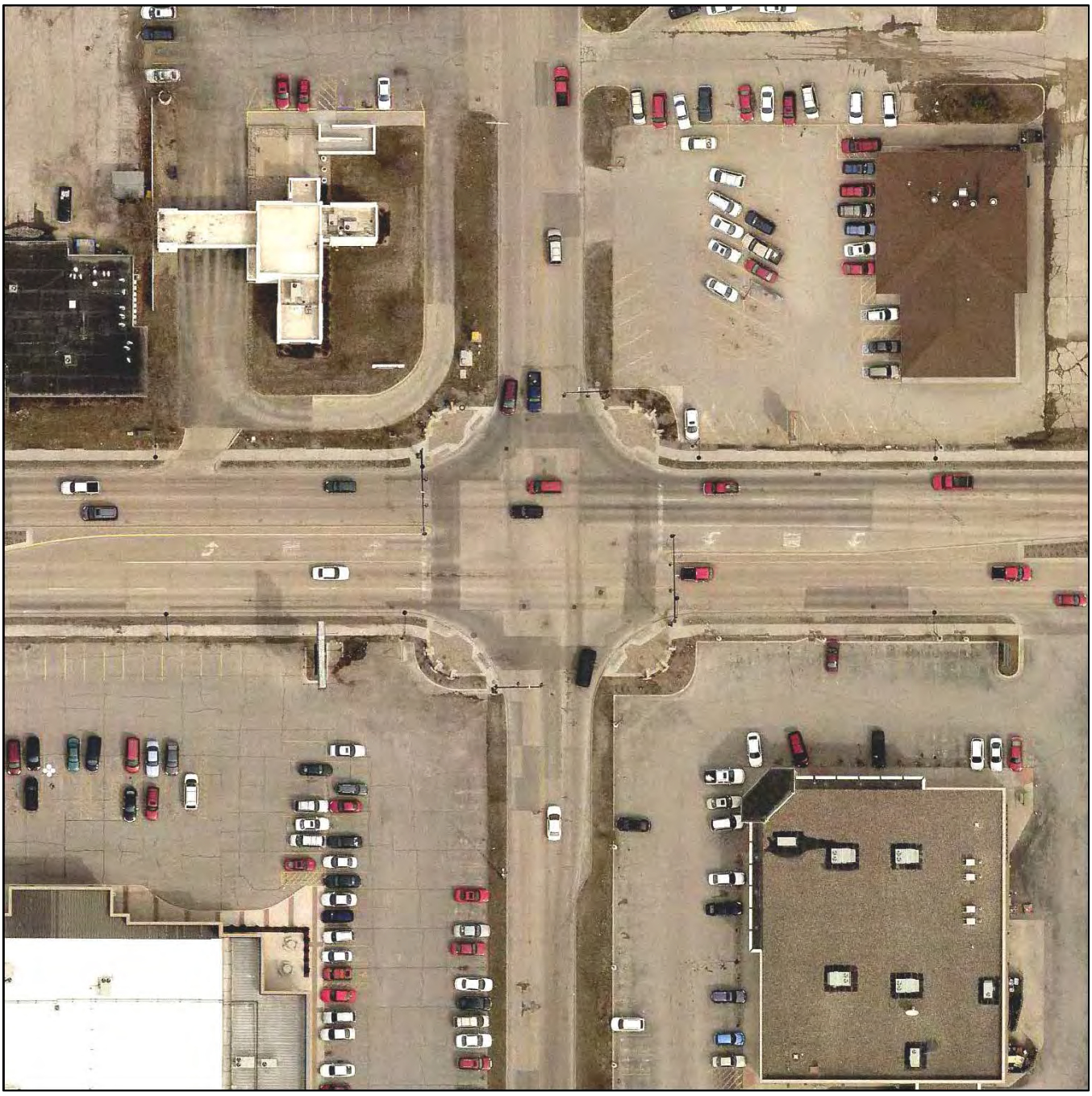

Intersection: 5th Ave S & S 25th St ID#: 528

Signal Evaluation	MUTCD Issues
1. Econolite ASC/3-2100 signal controller 2. Autoscope Terra video detection 3. Protected/permissive left turn phasing for all approaches 4. Does have communication equipment, but nothing connecting to the distribution panel 5. Does have battery back-up system	1. Have circular indications over left turn lanes. Acceptable per previous MUTCD. Should be changed to flashing yellow arrow to comply with 2009 Edition. 2. When replacing street name signs, signs on mast arms shall have 12", upper and lowercase lettering 3. Update clearance (yellow and red) and pedestrian intervals to current standards of practice

Misc. Comments

1. The left turn lane signal heads over 5th Ave S are optically limiting. Replace signal heads to improve visibility of indications.
2. Pedestrian pushbuttons are located on the signal poles. The signal poles are not in proper ADA locations in each corner. Install the pushbuttons on pedestal poles near each ramp or relocate/replace signal poles to more appropriate locations.
3. Signal poles appear to have been painted on site. Paint was missed in places and chipping off in others. Touch up paint on signal poles and check yearly for potential touch ups.
4. The shared through/right (R3-6) signs are not needed for northbound and southbound traffic and can be removed. Touch up paint as needed for sign brackets.
5. The left only (R3-5) and left turn lane yield on green (R10-12) signs are both not needed N/S. The City could remove the left only sign for each approach and leave the left turn yield on green signs. Once flashing yellow arrow is implemented, neither sign is needed.

Budget Needs

Intersection	Item	Period for Modification		
		Short-Term (0-2 Years)	Mid-Term (2-5 Years)	Long-Term (5-15 Years)
5th Ave S & S 25th St	Remove Unneeded Lane Configuration Signs and Brackets	$400		
	Replace Optically Limiting Signal Heads	$2,500		
	Install Pushbutton Poles so closer to Sidewalk Ramps	$6,000		
	Touch-up Paint on Poles		$1,000	
	Implement Flashing Yellow Arrows			$30,000
	Annual Maintenance	$800	$1,200	$4,000
Total		$9,700	$2,200	$34,000

SIGNAL EQUIPMENT DATA

INTERSECTION: 5th Ave S & S 25th St

DATE: 6/26/14

POWER: Underground

ZONE: 5

ID: 528

CONTROLLER:
BRAND: Econolite
MODEL: ASC/3-2100

SOFTWARE VER:

DETECTORS:
LOOP: None

VIDEO: Autpscope Terra

PUSHBUTTONS: Yes

POLE DATA

POLE NO.	POLE TYPE	POLE MATL.	TYPE OF BASE	ARM LENGTH / PEDSTL. HEIGHT		REMARKS
1	3	2	2	38		Push button on street side
2	1	2	2	28		
3	3	2	2	40		Push button on street side
4	1	2	2	28		

POLE TYPE
1. SINGLE MAST ARM
2. TWIN MAST ARM
3. COMBINATION
4. PEDESTAL
5. UTILITY
6. OTHER

POLE MATL.
1. ALUMINUM
2. STEEL
3. WOOD
4. OTHER

TYPE OF BASE
1. PLATE
2. STEEL TRANSFORMER
3. ALUM. TRANSFORMER

AUXILIARY EQUIPMENT

VIDEO: Autoscope Terra Access Point NEMA

PRE-EMPTION:

CPU ID: ODO301FFC5C87426

CONFLICT MONITOR:

BATTERY BACK-UP: Techpoint Developments ME-XL, 4 extra batteries

DETECTOR AMP:

COMMUNICATION:

IP Address: 192.168.11.200

American Dynamics Monitor

Netmask: 255.255.2550

Gateway: 192.168.11.1

SIGNAL TIMING DATA

INTERSECTION: 5th Ave S & S 25th St
CONTROLLER: Econolite ASC/3-2100
DATE: 6/26/14 - Existing Timings

Basic Timing Data

	Ph1 -WBL	Ph2 - EB	Ph3 -NBL	Ph4 - SB	Ph5 -EBL	Ph6 -WB	Ph7 -SBL	Ph8 - NB
Min Grn	3	15	3	10	3	15	3	10
Passage								
Max 1	15	45	15	35	15	45	15	35
Max 2	15	45	15	35	15	45	15	35
Yellow	3.0	4.5	3.0	4.5	3.0	4.5	3.0	4.5
Red Clr	0.0	1.5	0.0	1.5	0.0	1.5	0.0	1.5
Walk	0	7	0	7	0	7	0	7
Ped Clear	0	15	0	15	0	15	0	15
Recall		X				X		
Lock/Non		X				X		
Act/Non-Act								

Coordination Plan Data

NOT IN COORDINATION

Dial 1/Split 1 Cycle: Offset:

Phase	1	2	3	4	5	6	7	8
Time								
Mode								

Active Periods:

Dial 2/Split 1 Cycle: Offset:

Phase	1	2	3	4	5	6	7	8
Time								
Mode								

Active Periods:

Dial 3/Split 1 Cycle: Offset:

Phase	1	2	3	4	5	6	7	8
Time								
Mode								

Active Periods:

Phasing

N

INDICATE NORTH

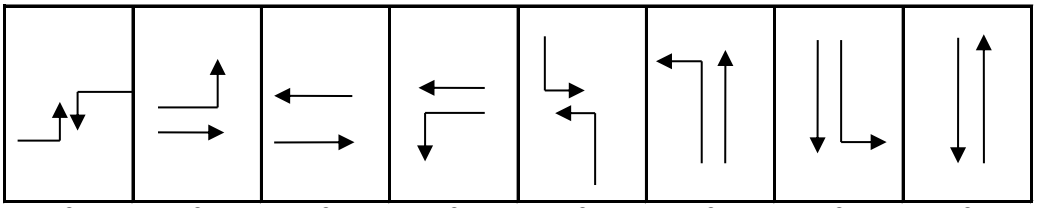

1 & 5 | 2 & 5 | 2 & 6 | 2 & 5 | 3 & 7 | 3 & 8 | 4 & 7 | 4 & 8

SIGNAL LAYOUT: S 25th St + 5th Av S

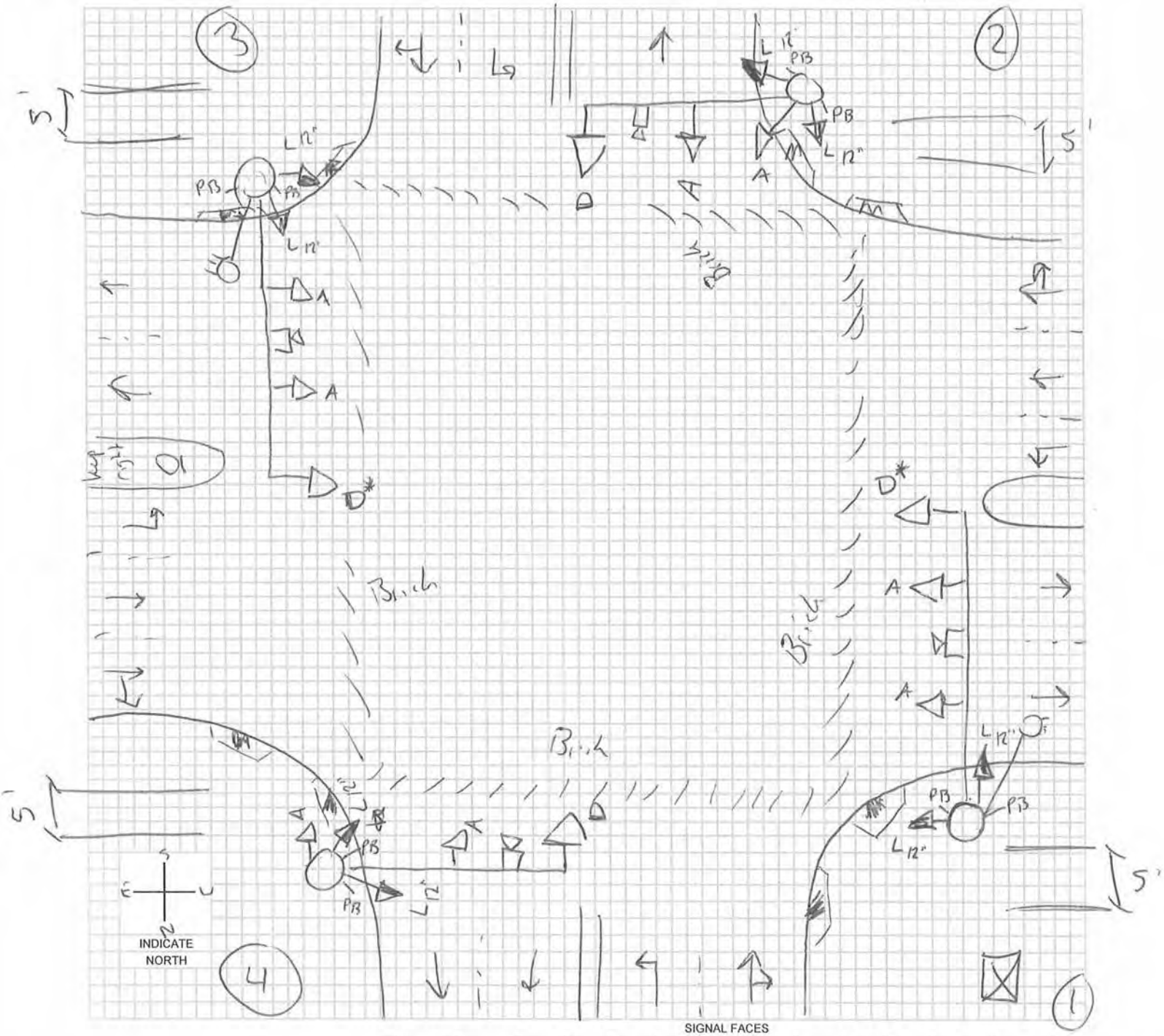

SIGNAL FACES

A	B	C	D	E	F	G	H	I	J	K	L	M	O
12 R	12 R	12 R	12 R	12 R	12 R	12 R	12 R	12 R	12 R	DW	W/DW	W DW	
12 Y	12 Y / 12 Y	12 Y	12 Y	12 Y	12 Y	12 Y	12 Y	12 Y	12 Y	W	CD		
12 G	12 G / 12 G	12 G	12 G	12 G	12 G	12 G	12 FY	12 G	12 G			N: W CD DW	
		12 G	12 Y				12 G	12 G	12 Y				
			12 G						12 G				

LEGEND

- POLE & NUMBER
- SIGNAL INDICATION
- PEDESTRIAN SIGNAL INDICATION
- PB PUSHBUTTON
- 00-00-PD LOOP DECTETOR
- DISTANCE FROM STOP LINE - AREA OF DETECTION - PRESENCE PR; PULSE P; DELAY D; NO DELAY ND; EXTENSION E
- CONTROLLER
- METER
- VIDEO DET CAMERA

-* OPTICALLY PROGRAMMABLE

Intersection: 5th Ave S & S 25th St ID#: 528

Crash Summary	Trends
1. Crash rate is above the statewide average (1.10 crashes/MEV). 2. 27 of the 101 crashes were injury crashes. There were two major injury crashes. 3. Followed too close (13%), ran traffic signal (13%), driving too fast for conditions (10%), and failure to yield right of way making left turn (10%) were reported most frequently as the major causes (37 crashes indicated the surface condition was wet, ice, snow, or slush). 4. Two vehicles were reported as striking a fixed object: curb/island/raised median (1) and concrete barrier (1) 5. 89% of the crashes occurred between 10 AM and 8 PM 6. 34% of the drivers involved in the crashes were under the age of 30.	1. Prior to 2011, the intersection experienced at least 8 crashes per year (averaged 12 crashes per year). Since, the intersection has averaged 5 crashes per year (0.5 crashes/MEV). 2. 44% of the crashes were rear-end crashes and 25% were broadside/right angle crashes 3. There is not a consistent pattern of a direction having more crashes than others.

Mitigation Options / Potential Improvements

1. Implement coordination timings will reduce the potential for rear-end collisions and drivers running the traffic signal.
2. Align the north/south left turn lanes so the line up across from each other, this will improve the vision of drivers and reduce the potential for a collision between through and opposing left turning vehicles. Some signal modifications may be necessary to maintain a signal head over each lane.
3. Other intersection improvements were made in 2011.
4. East Region Phase 2 project will convert the north approach to a 3-lane cross-section. Phase 4 will replace the pavement.

Funding Potential

1. At this time, funding is only needed to implement coordination timings.
2. The recent reduction in crashes and few injuries makes applying for TSIP funding unlikely

Cost Opinion

Intersection	Item	Period for Modification		
		Short-Term (0-2 Years)	Mid-Term (2-5 Years)	Long-Term (5-15 Years)
5th Ave S & S 25th St	Revise Pavement Markings to align N/S Left Turn Lanes *			$10,000
Total				$10,000

*- Assumes no Signal Modifications and matches north approach as configured in East Region Phase 2

Intersection Crash Summary

Location: 5th Ave S & S 25th St
City/County: Fort Dodge, Webster County
Time Period: 2004- May 2014 Crash Period = 10.5 years
Prepared by: OMV

NUMBER OF CRASHES

0	Fatal Crashes	0 fatalities	0 injuries
2	Major Injury Crashes		2 injuries
3	Minor Injury Crashes		5 injuries
22	Possible/Unknown Injury Crashes		31 injuries
74	Property Damage Only Crashes		
Totals: 101	Crashes	0 fatalities	38 injuries

CRASH RATES

Total Crash Rate =	101	/	91.92 MEV	=	1.10 Total Crashes/MEV
Fatal Crash Rate =	0	/	91.92 MEV	=	0.00 Fatal Crashes/MEV
Fatal/Injury Crash Rate =	27	/	91.92 MEV	=	0.29 F & I Crashes/MEV

CRASH FREQUENCY

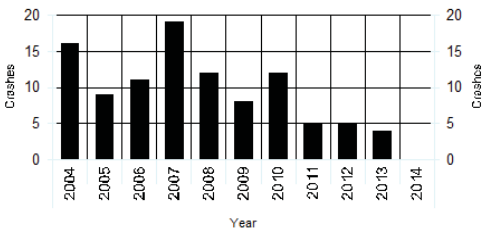

CRASH TYPE

4	Head-on	12	Sideswipe, Same Direction
44	Rear-end Crash	0	Sideswipe, Opposite Direction
25	Broadside/Right angle Crash	0	Parked
11	Angle, Oncoming Left Turn	0	Other
0	Backing	3	Unknown

Non Vehicle Collision Type

0	Pedestrian
0	Bicycle
2	Fixed Object

TRAFFIC - AADT

North Approach =	13200
South Approach =	3370
East Approach =	12600
West Approach =	18800
Million Entering Vehicles (MEV) =	91.92

Notes:
IDOT 2007 AADT

S 25th St and 5th Ave S

2004 - 2014 Reportable Crashes

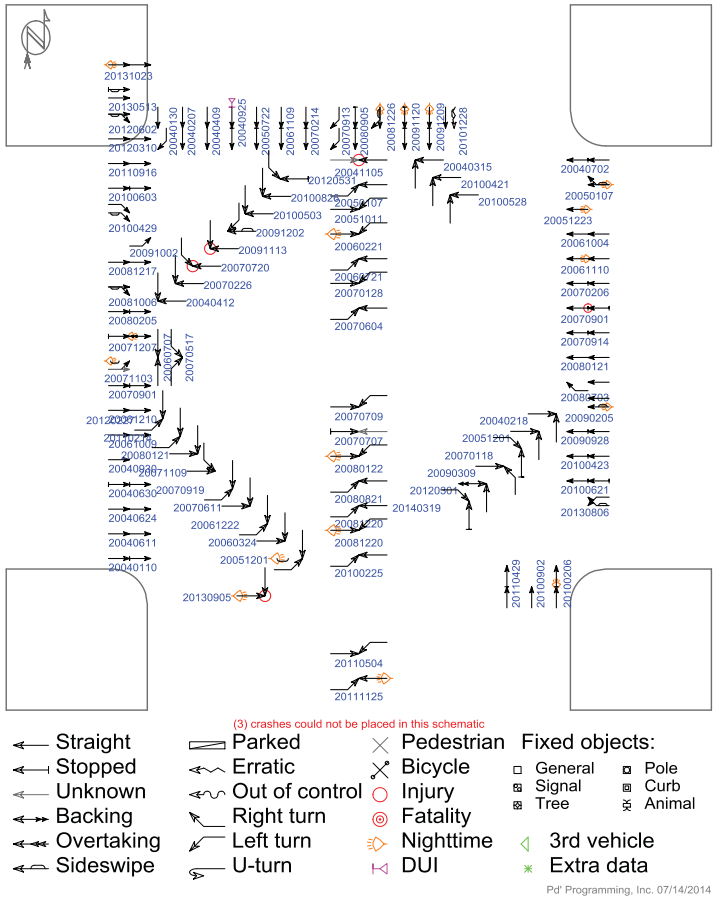

Iowa Department of Transportation

Major Cause Summary

S 25th St and 5th Ave S

Report Version 1.1 Jan 2005

Analysis Years: 2004 [16], 2005 [9], 2006 [11], 2007 [19], 2008 [12], 2009 [8], 2010 [12], 2011 [5], 2012 [5], 2013 [4]

Crash Summary:

Fatal	-
Major Injury	2
Minor Injury	3
Possible/Unknown	22
PDO	74
Total Crashes	101

Injury Summary:

Fatal	-
Major Injury	2
Minor Injury	5
Possible	29
Unknown	2
Total Injuries	38

TOT Property Damage: $364,035

AVG Property Damage: $3,604

Surface Condition Summary:

Dry	61
Wet	15
Ice	6
Snow	14
Slush	2
Sand/Dirt/Oil/Gravel	-
Water	-
Other	-
Unknown	-
Not Reported	3
Total Crashes	101

Major Cause Summary:

	Animal		Improper Backing
13	Ran Traffic Signal		Illegally Parked/Unattended
	Ran Stop Sign		Swerving/Evasive Action
1	Crossed Centerline		Over-Correcting/Over-Steering
	FTYROW: At Uncontrolled Intersection		Downhill Runaway
2	FTYROW: Making Right Turn on Red Signal		Equipment Failure
1	FTYROW: From Stop Sign		Separation of Units
	FTYROW: From Yield Sign		Ran Off Road - Right
10	FTYROW: Making Left Turn		Ran Off Road - Straight
4	FTYROW: From Driveway		Ran Off Road - Left
1	FTYROW: From Parked Position	5	Lost Control
	FTYROW: To Pedestrian		Inattentive/Distracted By: Passenger
7	FTYROW: Other (explain in narrative)	1	Inattentive/Distracted By: Use of Phone or Other
1	Traveling Wrong Way or on Wrong Side of Rd		Inattentive/Distracted By: Fallen Object
10	Driving Too Fast for Conditions		Inattentive/Distracted By: Fatigued/Asleep
	Exceeded Authorized Speed	2	Other: Vision Obstructed
	Made Improper Turn		Oversized Load/ Oversized Vehicle
	Improper Lane Change		Cargo/Equipment Loss or Shift
13	Followed Too Close	15	Other: Other Improper Action
	Disregarded Railroad Signal	13	Unknown
	Disregarded Warning Sign	2	Other: No Improper Action
	Operating Vehicle in Reckless/Aggressive Manner		None Indicated

Selection Filter:

None

Analyst: OMV

Notes: Radius = 150'

Iowa Department of Transportation

Driver and Time Summary

S 25th St and 5th Ave S

Report Version 1.0 Aug 2006

Crash Time of Day Summary:

From / To	00:00 01:59	02:00 03:59	04:00 05:59	06:00 07:59	08:00 09:59	10:00 11:59	12:00 13:59	14:00 15:59	16:00 17:59	18:00 19:59	20:00 21:59	22:00 23:59	NR	Total	%
SUN	-	-	-	-	-	-	2	-	-	-	-	-	-	2	2
MON	-	-	-	1	2	1	3	3	5	2	-	-	-	17	17
TUE	-	-	-	-	-	-	4	-	1	2	-	-	-	7	7
WED	-	-	-	-	1	2	4	3	2	2	-	-	-	14	14
THU	-	-	-	-	1	3	4	5	4	3	1	-	-	21	21
FRI	-	-	-	-	1	5	7	2	6	5	1	1	-	28	28
SAT	-	-	-	-	-	4	3	1	1	1	-	2	-	12	12
Tot.				1	5	15	27	14	19	15	2	3		101	
%				1	5	15	27	14	19	15	2	3			100

Driver Age/Gender Summary:

Age	Male	Female	NR	Drivers	%
<14	-	-	-		
14	-	1	-	1	0
15	1	-	-	1	0
16	2	3	-	5	2
17	3	6	-	9	4
18	4	1	-	5	2
19	3	3	-	6	3
20	7	5	-	12	6
21 to 24	7	12	-	19	9
25 to 29	8	5	-	13	6
30 to 34	6	8	-	14	7
35 to 39	6	13	-	19	9
40 to 44	9	5	-	14	7
45 to 49	5	7	-	12	6
50 to 54	11	10	-	21	10
55 to 59	5	5	-	10	5
60 to 64	5	9	-	14	7
65 to 69	5	3	-	8	4
70 to 74	2	4	-	6	3
75 to 79	1	4	-	5	2
80 to 84	1	-	-	1	0
85 to 89	2	1	-	3	1
90 to 94	-	1	-	1	0
95 plus	-	-	-		
NR	1	-	9	10	5
Drivers	94	106	9	209	
%	45	51	4		100

Drug/Alcohol Summary:

	Total	%
Drug		
Alcohol, Less than Statutory		
Alcohol, Statutory	1	1
Drug/Alcohol, Less than Statutory		
Drug/Alcohol, Statutory		
Refused		
Under Influence of Alc/Drugs/Meds		
None Indicated	100	99
Total Crashes	101	100

Fixed Object Struck Summary:

	Vehs.	%
Bridge/Bridge rail/Overpass		
Underpass/Structure Support		
Culvert		
Ditch/Embankment		
Curb/Island/Raised Median	1	0
Guardrail		
Concrete Barrier	1	0
Tree		
Pole - Utility/Light/Etc		
Sign Post		
Mailbox		
Impact Attenuator		
Other Fixed Object		
None	207	99
Total Vehicles	209	100

Selection Filter:

None

Analyst: OMV

Notes: Radius = 150'

Intersection: 5th Ave S & S 25th St ID#: 528

Lane Width	**Turn Lanes**
Approaching N: 10 ft S: 11 ft E/W: 12 ft	Left turn lanes on N/S/E/W approaches. The painted N/S turn lanes have a negative offset No right turn lanes
Sidewalk/ADA Ramps	**Lighting**
5' wide sidewalks exist along both sides of each street on every approach. There are sidewalk ramps and detectable warning panels in all corners.	There are combination signal/lighting poles located in all corners of the intersection. There is street lighting on the E/W approaches to the intersection. The light poles and combination poles at the intersection utilize the City's decorative lighting arms and fixtures.
Parking	**Access/Driveways**
No parking existing along both streets near the intersection.	There are commercial driveways to every approach, however the nearest driveway is 100 ft from the intersection.

Miscellaneous

1. The signal poles are located within 3 ft of the back of curb. They could be struck by vehicles.
2. The pavement markings for the N/S left turn lanes could be adjusted to align the left turn lanes for better visibility if/when multiple vehicles are turning left. Minimal changes would be required to the signal if the signal heads are located over the lane lines. If signal heads directly over the center of the lanes are required, then a signal pole would have to be replaced. Will be a part of East Region Phases 2 and 4. May require longer mast arm signal poles.

Cost Opinion

Intersection	Item	Period for Modification		
		Short-Term (0-2 Years)	Mid-Term (2-5 Years)	Long-Term (5-15 Years)
5th Ave S & S 25th St	Replace N/S Signal Poles to align with 3-lane configuration *			$20,000
	Relocate Signal Poles further from traveled way (clear zone) #			$40,000
Total				$60,000

* - Accomplished if relocating signal pole for clear zone
\# - Assumes reusing two existing signal poles

CLICK TO RETURN TO SIGNAL LOCATION MAP

5th Ave S & S 29th St ID#: 529

Intersection: 5th Ave S & S 29th St ID#: 529

Signal Evaluation	MUTCD Issues
1. Traffic Control Technologies LMD 8000 signal controller 2. Autoscope Terra video detection 3. Protected/permissive left turn phasing for E/W approaches - Split phasing N/S 4. Does have any communication equipment, jumpers are connected to distribution panel, but not to anything else 5. Does have battery back-up system	1. Have circular indications over left turn lanes. Acceptable per previous MUTCD. Should be changed to flashing yellow arrow (arrow only heads) to comply with 2009 Edition. 2. When replacing street name signs, signs on mast arms shall have 12", upper and lowercase lettering 3. Update clearance (yellow and red) and pedestrian intervals to current standards of practice

Misc. Comments

1. The left turn lane signal heads over 5th Ave S are optically limiting. Replace signal heads to improve visibility of indications.
2. Have green right turn arrows on the N/S mast arms over the shared through/right turn lanes. The right turn green arrows should not come up as it would be in conflict with potential pedestrian phase. Also have 5-section right turn signal heads on the side of pole for same movement. These green and yellow arrows provide an overlapping indication with the E/W left turn phase. However, a through vehicle in that lane could potentially block any right turning vehicle during this overlap. All right turn arrow indications can be removed.
3. Signal poles appear to have been painted on site. Paint was missed in places and chipping off in others. Paint on signal poles should be touched up and checked on a yearly basis for touch ups.
4. The shared through/right (R3-6) sign is not needed for southbound traffic and the sign bracket on the northbound mast arm, not being used, can be removed. Touch up paint as needed.

Budget Needs

Intersection	Item	Period for Modification		
		Short-Term (0-2 Years)	Mid-Term (2-5 Years)	Long-Term (5-15 Years)
5th Ave S & S 29th St	Remove Unneeded Lane Configuration Signs and Brackets	$100		
	Replace Optically Limiting Signal Heads	$2,500		
	Remove Right Turn Arrows		$600	
	Touch-up Paint on Poles		$1,000	
	Replace/Upgrade Controller and/or Cabinet			$20,000
	Implement Flashing Yellow Arrows			$30,000
	Annual Maintenance	$800	$1,200	$4,000
Total		$3,400	$2,800	$54,000

SIGNAL EQUIPMENT DATA

INTERSECTION: 5th Ave S & S 29th St

DATE: 6/24/14

POWER: Underground

ZONE: 5

ID: 529

CONTROLLER:
BRAND: Traffic Control Technologies
MODEL: LMD 8000

SOFTWARE VER:

DETECTORS:
LOOP: Detector Systems 262B in cabinet but not operational
VIDEO: Autoscope Terra Access

PUSHBUTTONS:

POLE DATA

POLE NO.	POLE TYPE	POLE MATL.	TYPE OF BASE	ARM LENGTH / PEDSTL. HEIGHT		REMARKS
1	3	2*	2	45		
2	3	2*	2	30		
3	3	2*	2	45		
4	3	2*	2	30		
						*Painted in place

POLE TYPE
1. SINGLE MAST ARM
2. TWIN MAST ARM
3. COMBINATION
4. PEDESTAL
5. UTILITY
6. OTHER

POLE MATL.
1. ALUMINUM
2. STEEL
3. WOOD
4. OTHER

TYPE OF BASE
1. PLATE
2. STEEL TRANSFORMER
3. ALUM. TRANSFORMER

AUXILIARY EQUIPMENT

VIDEO: Autoscope Terra Access

PRE-EMPTION: Opticom 3M (not connected?)

CONFLICT MONITOR: Traffic Control Technologies LMN12E

BATTERY BACK-UP: Techpower Developments ME-XL with 4 batteries

DETECTOR AMP: Detector Systems

COMMUNICATION: Exists, but not connected

SIGNAL TIMING DATA

INTERSECTION: 5th Ave S & S 29th St
CONTROLLER: Traffic Control Technologies
DATE: 6/24/14 - Existing Timings

Basic Timing Data

	Ph1 -WBL	Ph2 -EB	Ph3 - NB	Ph4 - SB	Ph5 - EB	Ph6 -WB	Ph7 -	Ph8 -
Min Grn	5	10	5	5	5	10	0	5
Passage	0.0	2.0	2.0	2.0	0.0	2.0	0.0	0.0
Max 1	15	35	15	25	15	35	0	35
Max 2	0	45	0	45	0	45	0	45
Yellow	3.0	4.0	3.0	3.0	3.0	4.0	0.0	3.0
Red Clr	1.0	1.0	1.0	0.5	0.0	1.0	0.0	1.0
Walk	0	8	8	8	0	8	0	8
Ped Clear	0	10	20	20	0	10	0	20
Recall		X				X		
Lock/Non	Non	Non	Non	Non	Non	Non	Non	Non
Act/Non-Act								

Coordination Plan Data

*Possibly not in coordination, Appears to be running Cycle1 Spl

Dial 1/Split 1/2 Cycle: 68 Offset: 17

Phase	1	2	3	4	5	6	7	8
Time		36		32		36		32
Mode								

Active Periods: All day every day

Dial 2/Split 1 Cycle: Offset:

Phase	1	2	3	4	5	6	7	8
Time								
Mode								

Active Periods:

Dial 3/Split 1 Cycle: Offset:

Phase	1	2	3	4	5	6	7	8
Time								
Mode								

Active Periods:

Phasing

N

INDICATE NORTH

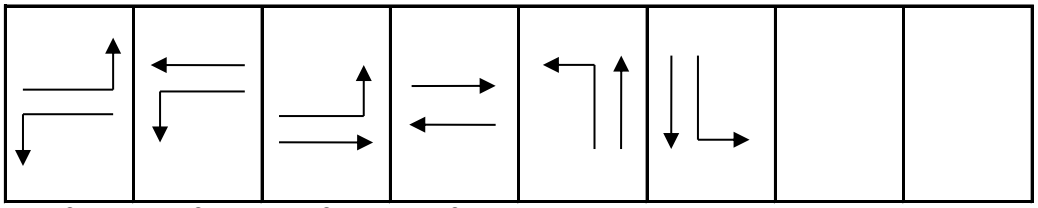

1 & 5 1 & 6 2 & 5 2 & 6 3 4

529

SIGNAL LAYOUT: 8th Ave South & S 29th St

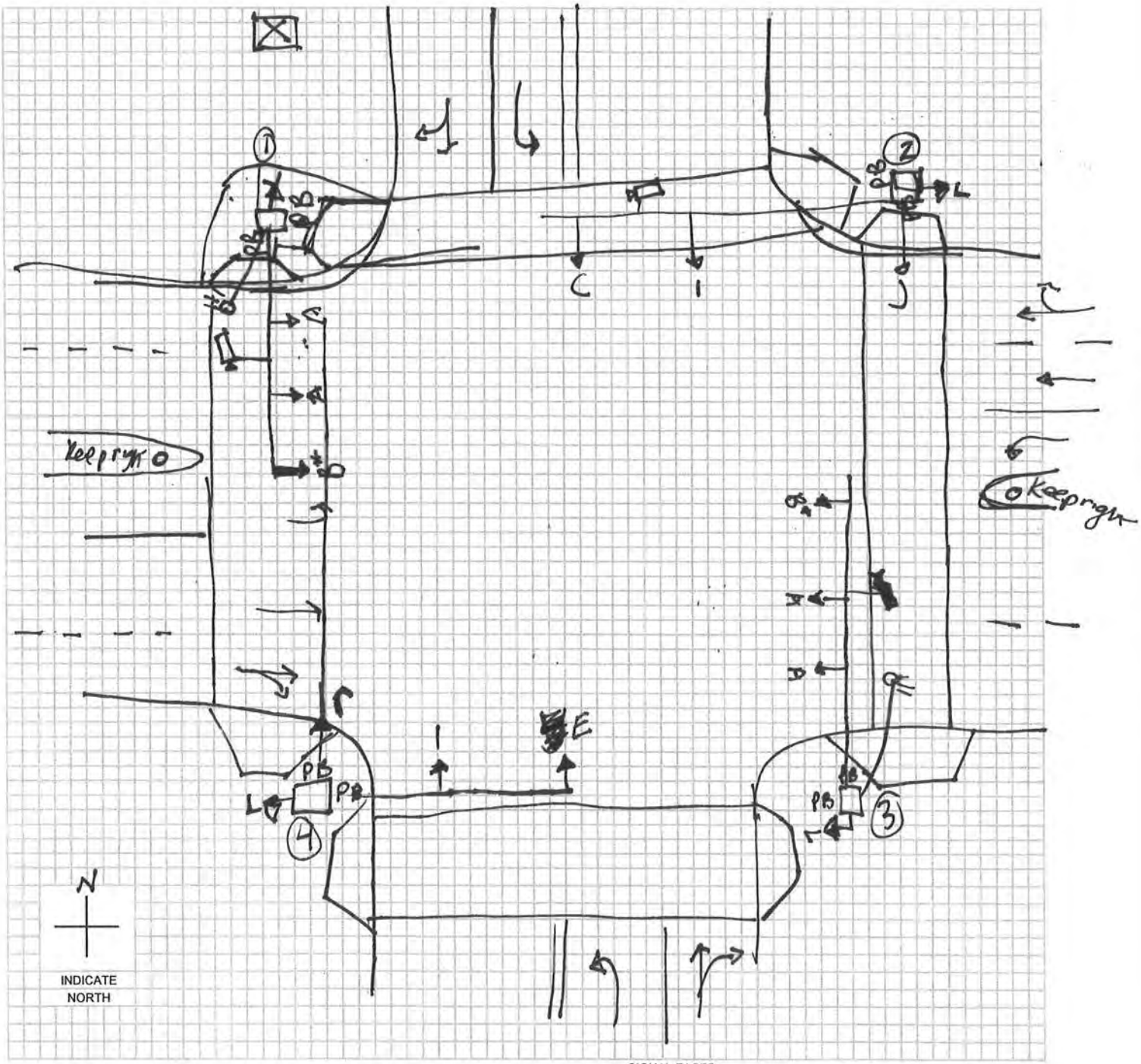

LEGEND

- (7) POLE & NUMBER
- SIGNAL INDICATION
- PEDESTRIAN SIGNAL INDICATION
- PB PUSHBUTTON
- 00-00-PD LOOP DECTETOR
- DISTANCE FROM STOP LINE - AREA OF DETECTION - PRESENCE PR; PULSE P; DELAY D; NO DELAY ND; EXTENSION E
- CONTROLLER
- (M) METER
- VIDEO DET CAMERA

SIGNAL FACES

A	B	C	D	E	F	G	H	I	J	K	L	M	O
12 R	12 R	12 R	12 R	12 R	12 R	12 ◄R	12 ◄R	12 R	12 R	DW	W/DW	W DW	
12 Y	12 ◄Y / 12 Y	12 Y	12 Y	12 Y	12 ◄Y	12 ◄Y	12 ◄Y	12 Y	12 Y	W	CD		
12 G	12 ◄G / 12 G	12 G	12 G	12 ◄G	12 ◄G	12 ◄G	12 ◄FY	12 G	12 G			N: W CD DW	
		12 ◄G	12 Y				12 ◄G	12 G►	12 Y►				
			12 ◄G						12 G►				

* OPTICALLY PROGRAMMABLE

Intersection: 5th Ave S & S 29th St ID#: 529

Crash Summary	**Trends**
1. Crash rate is above the statewide average (1.20 crashes/MEV). 2. 12 of the 71 crashes were injury crashes. The most severe crash was a minor injury crash. 3. Failure to yield right of way making left turn (21%), followed too close (11%), and ran traffic signal (11%) were reported most frequently as the major causes (20 crashes indicated the surface condition was wet, ice, snow, or slush). 4. No fixed objects were struck 5. 56% of the crashes occurred between 12 PM and 6 PM 6. 27% of the drivers involved in the crashes were under the age of 30. 29% were over 60.	1. Prior to 2010, the intersection experienced at least 5 crashes per year (averaged 9 crashes per year). Since, the intersection has averaged 4 crashes per year (0.7 crashes/MEV). 2. 32% of the crashes were angle, oncoming left turn crashes, 31% were rear-end crashes, and 24% were broadside/right angle crashes 3. Most crashes involve E/W traffic, even recently. 4. Split phasing must have been in place prior to 2004 as records indicate minimal crashes involving northbound and southbound vehicles

Mitigation Options / Potential Improvements

1. Implement coordination timings will reduce the potential for rear-end collisions and drivers running the traffic signal.
2. Align the north/south left turn lanes so the line up across from each other, this will improve the vision of drivers and reduce the potential for a collision between through and opposing left turning vehicles. Some signal modifications may be necessary to maintain a signal head over each lane. And this will allow for removing the N/S split phasing.
3. Other intersection improvements were made in 2011.

Funding Potential

1. At this time, funding is only needed to implement coordination timings.
2. The recent reduction in crashes and few injuries makes applying for TSIP funding unlikely

Cost Opinion

Intersection	Item	Period for Modification		
		Short-Term (0-2 Years)	Mid-Term (2-5 Years)	Long-Term (5-15 Years)
5th Ave S & S 29th St	Revise Pavement Markings to align N/S Left Turn Lanes - to be included in East Region Phase 3 Construction			
Total				

Intersection Crash Summary

Location:	5th Ave S & S 29th St		
City/County:	Fort Dodge, Webster County		
Time Period:	2004- May 2014	Crash Period =	10.5 years
Prepared by:	OMV		

NUMBER OF CRASHES

0	Fatal Crashes	0	fatalities	0	injuries
0	Major Injury Crashes			0	injuries
1	Minor Injury Crashes			1	injuries
11	Possible/Unknown Injury Crashes			19	injuries
59	Property Damage Only Crashes				
Totals: 71	Crashes	0	fatalities	20	injuries

CRASH RATES

Total Crash Rate =	71	/	59.25 MEV	=	1.20 Total Crashes/MEV
Fatal Crash Rate =	0	/	59.25 MEV	=	0.00 Fatal Crashes/MEV
Fatal/Injury Crash Rate =	12	/	59.25 MEV	=	0.20 F & I Crashes/MEV

CRASH FREQUENCY

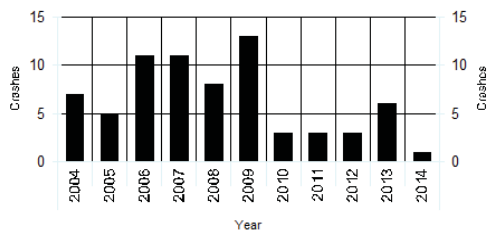

CRASH TYPE

1	Head-on	7	Sideswipe, Same Direction		Non Vehicle Collision Type
22	Rear-end Crash	0	Sideswipe, Opposite Direction	0	Pedestrian
17	Broadside/Right angle Crash	0	Parked	0	Bicycle
23	Angle, Oncoming Left Turn	0	Other	0	Fixed Object
0	Backing	0	Unknown	1	No Object Reported

TRAFFIC - AADT

North Approach =	6200
South Approach =	2820
East Approach =	11000
West Approach =	10900
Million Entering Vehicles (MEV) =	59.25

Notes:
xxxxxxx

S 29th St and 5th Ave S

2004 - 2014 Reportable Crashes

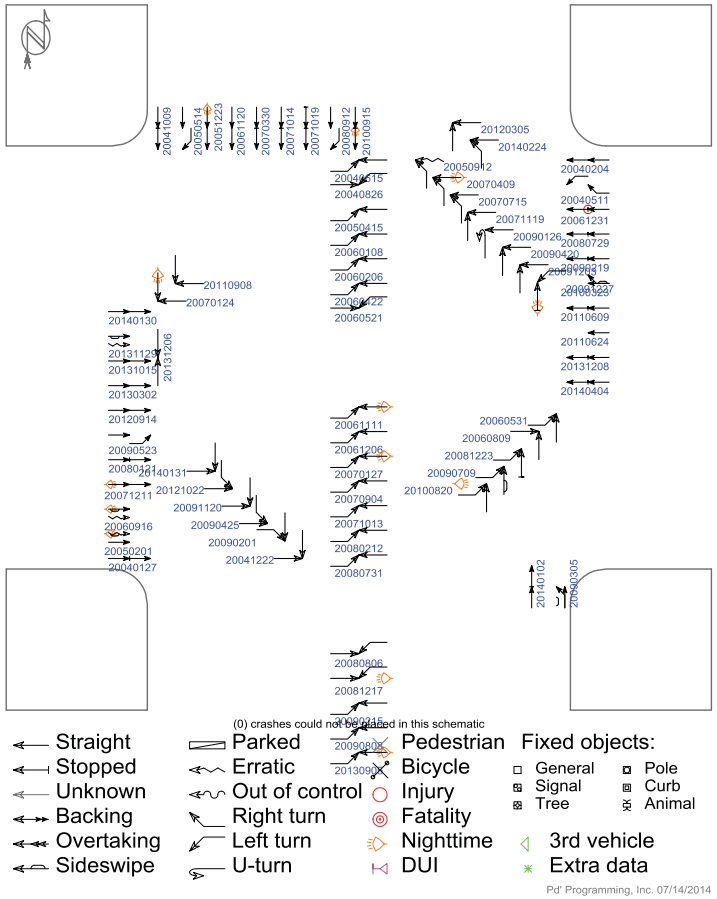

Iowa Department of Transportation

Major Cause Summary

S 29th St and 5th Ave S

Report Version 1.1 Jan 2005

Analysis Years: 2004 [7], 2005 [5], 2006 [11], 2007 [11], 2008 [8], 2009 [13], 2010 [3], 2011 [3], 2012 [3], 2013 [6], 2014 [1]

Crash Summary:

Fatal	-
Major Injury	-
Minor Injury	1
Possible/Unknown	11
PDO	59
Total Crashes	71

Injury Summary:

Fatal	-
Major Injury	-
Minor Injury	1
Possible	16
Unknown	3
Total Injuries	20

TOT Property Damage: $285,175

AVG Property Damage: $4,017

Surface Condition Summary:

Dry	51
Wet	6
Ice	5
Snow	7
Slush	2
Sand/Dirt/Oil/Gravel	-
Water	-
Other	-
Unknown	-
Not Reported	-
Total Crashes	71

Major Cause Summary:

	Animal		Improper Backing
8	Ran Traffic Signal		Illegally Parked/Unattended
	Ran Stop Sign		Swerving/Evasive Action
4	Crossed Centerline		Over-Correcting/Over-Steering
	FTYROW: At Uncontrolled Intersection		Downhill Runaway
	FTYROW: Making Right Turn on Red Signal		Equipment Failure
1	FTYROW: From Stop Sign		Separation of Units
	FTYROW: From Yield Sign		Ran Off Road - Right
15	FTYROW: Making Left Turn		Ran Off Road - Straight
	FTYROW: From Driveway		Ran Off Road - Left
	FTYROW: From Parked Position	2	Lost Control
	FTYROW: To Pedestrian		Inattentive/Distracted By: Passenger
4	FTYROW: Other (explain in narrative)	1	Inattentive/Distracted By: Use of Phone or Other
	Traveling Wrong Way or on Wrong Side of Rd	1	Inattentive/Distracted By: Fallen Object
6	Driving Too Fast for Conditions	1	Inattentive/Distracted By: Fatigued/Asleep
	Exceeded Authorized Speed	1	Other: Vision Obstructed
	Made Improper Turn		Oversized Load/ Oversized Vehicle
	Improper Lane Change		Cargo/Equipment Loss or Shift
8	Followed Too Close	8	Other: Other Improper Action
	Disregarded Railroad Signal	8	Unknown
	Disregarded Warning Sign	3	Other: No Improper Action
	Operating Vehicle in Reckless/Aggressive Manner		None Indicated

Selection Filter:

None

Analyst: OMV

Notes: Radius = 150'

Iowa Department of Transportation

Driver and Time Summary

S 29th St and 5th Ave S

Report Version 1.0 Aug 2006

Crash Time of Day Summary:

From / To	00:00 01:59	02:00 03:59	04:00 05:59	06:00 07:59	08:00 09:59	10:00 11:59	12:00 13:59	14:00 15:59	16:00 17:59	18:00 19:59	20:00 21:59	22:00 23:59	NR	Total	%
SUN	-	-	-	-	1	1	4	1	3	-	-	-	-	10	14
MON	-	-	-	1	1	2	2	-	2	1	1	-	-	10	14
TUE	-	-	-	-	-	-	3	3	2	1	1	-	-	10	14
WED	-	-	1	-	-	1	1	3	1	1	1	-	-	9	13
THU	-	-	-	1	2	1	2	2	1	-	1	-	-	10	14
FRI	-	-	-	-	1	1	2	3	2	1	1	-	-	11	15
SAT	-	-	-	1	2	-	1	-	2	2	3	-	-	11	15
Tot.			1	3	7	6	15	12	13	6	8			71	
%			1	4	10	8	21	17	18	8	11				100

Driver Age/Gender Summary:

Age	Male	Female	NR	Drivers	%
<14	-	-	-		
14	-	-	-		
15	1	-	-	1	1
16	3	2	-	5	3
17	1	2	-	3	2
18	5	1	-	6	4
19	1	3	-	4	3
20	-	1	-	1	1
21 to 24	6	3	-	9	6
25 to 29	4	6	-	10	7
30 to 34	7	2	-	9	6
35 to 39	3	6	-	9	6
40 to 44	6	3	-	9	6
45 to 49	7	9	-	16	11
50 to 54	5	2	-	7	5
55 to 59	6	6	-	12	8
60 to 64	8	6	-	14	10
65 to 69	4	3	-	7	5
70 to 74	2	2	-	4	3
75 to 79	5	-	-	5	3
80 to 84	2	4	-	6	4
85 to 89	1	3	-	4	3
90 to 94	1	-	-	1	1
95 plus	-	-	-		
NR	-	-	5	5	3
Drivers	78	64	5	147	
%	53	44	3		100

Drug/Alcohol Summary:

	Total	%
Drug		
Alcohol, Less than Statutory		
Alcohol, Statutory		
Drug/Alcohol, Less than Statutory		
Drug/Alcohol, Statutory		
Refused		
Under Influence of Alc/Drugs/Meds		
None Indicated	71	100
Total Crashes	71	100

Fixed Object Struck Summary:

	Vehs.	%
Bridge/Bridge rail/Overpass		
Underpass/Structure Support		
Culvert		
Ditch/Embankment		
Curb/Island/Raised Median		
Guardrail		
Concrete Barrier		
Tree		
Pole - Utility/Light/Etc		
Sign Post		
Mailbox		
Impact Attenuator		
Other Fixed Object		
None	147	100
Total Vehicles	147	100

Selection Filter:

None

Analyst: OMV

Notes: Radius = 150'

Intersection: 5th Ave S & S 29th St ID#: 529

Lane Width	**Turn Lanes**
Approaching N/S: 12 ft E/W: 12 ft	Left turn lanes on N/S/E/W approaches. The painted N/S turn lanes have a negative offset No right turn lanes
Sidewalk/ADA Ramps	**Lighting**
5' wide sidewalks exist along 5th Ave S on every approach. There are sidewalk ramps and detectable warning panels in all corners.	There are combination signal/lighting poles located in all corners of the intersection. There is street lighting on the E/W approaches to the intersection. The light poles and combination poles at the intersection utilize the City's decorative lighting arms and fixtures.
Parking	**Access/Driveways**
No parking existing along both streets near the intersection.	There are commercial driveways to every approach, however the nearest driveway is 100 ft from the intersection.

Miscellaneous

1. The signal poles are located within 3 ft of the back of curb. They could be struck by vehicles.
2. The pavement markings for the N/S left turn lanes could be adjusted to align the left turn lanes for better visibility if/when multiple vehicles are turning left. Minimal changes would be required to the signal if the signal heads are located over the lane lines. If signal heads directly over the center of the lanes are required, then a signal pole would have to be replaced. Will be a part of East Region Phases 2 and 4. May require longer mast arm signal poles.
3. The signal pole footings in all corners, except NW, of the intersection extend above the adjacent sidewalk. The NE and SE corner footings only extend 2" or less above the sidewalk. The SW corner footing extends 1 ft or more above the sidewalk. The SW corner footing is an obstruction to walking paths. There are sufficient paved surfaces around the pole footings that someone in a wheelchair could get around them. If the traffic signal is reconstructed, replace the footings with ones that are flush to the sidewalk surface. There is some concern with the structural capability of the SW corner footing.

Cost Opinion

Intersection	Item	Period for Modification		
		Short-Term (0-2 Years)	Mid-Term (2-5 Years)	Long-Term (5-15 Years)
5th Ave S & S 29th St	Replace Pole Footings to be Flush with Sidewalk			$10,000
	Relocate Signal poles out of Ped area			$25,000
Total				$35,000

CLICK TO RETURN TO SIGNAL LOCATION MAP

5th Ave S & S 30th St ID#: 530

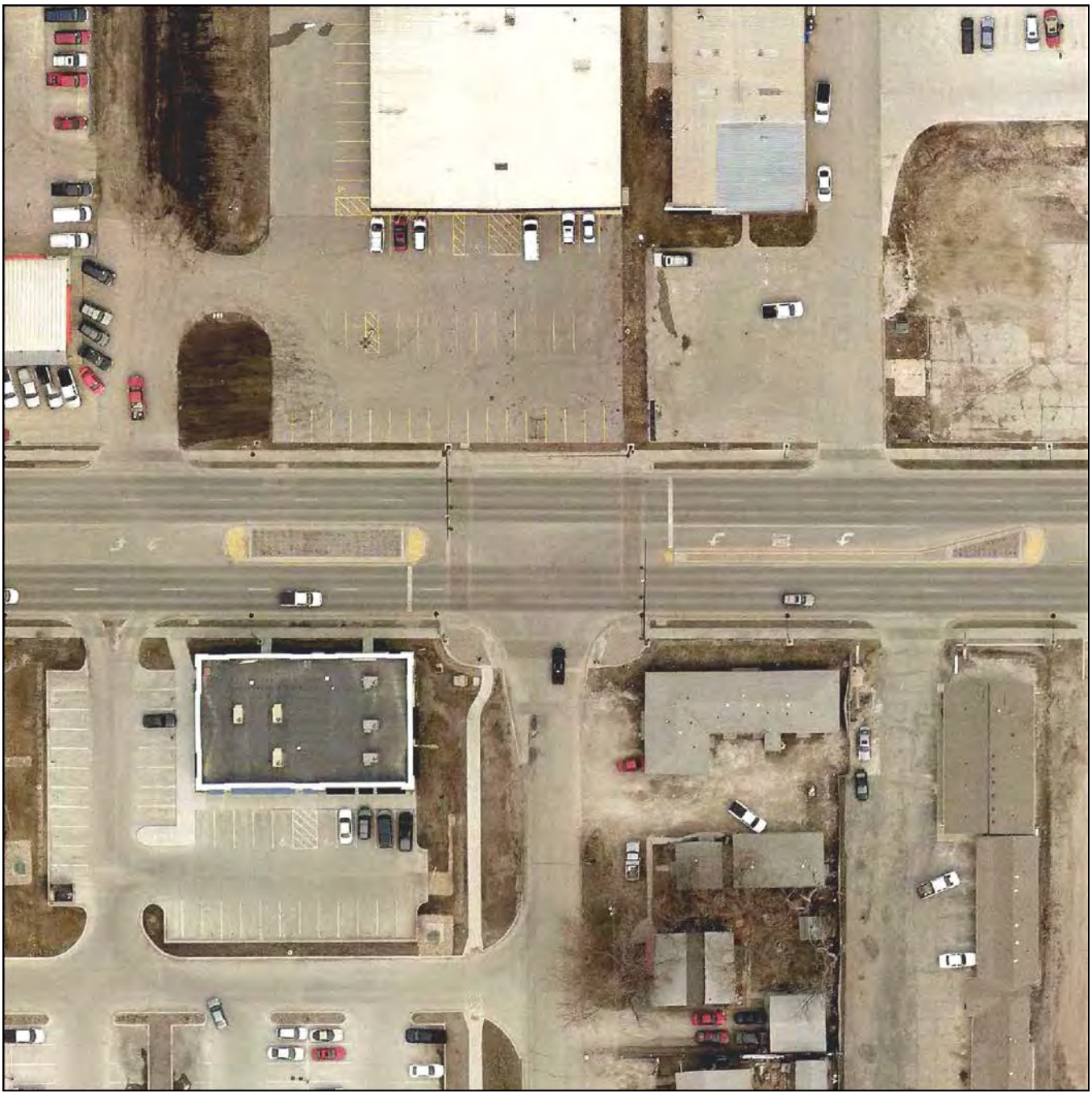

Intersection: 5th Ave S & S 30th St ID#: 530

Signal Evaluation	MUTCD Issues
1. Siemens Eagle M52 signal controller 2. Autoscope Terra video detection 3. Protected/permissive left turn phasing for E/W approaches - No north approach 4. Does not have any communication equipment 5. Does have battery back-up system	1. Have circular indications over left turn lane. Acceptable per previous MUTCD. Should be changed to flashing yellow arrow (arrow only heads) to comply with 2009 Edition. 2. When replacing street name signs, signs on mast arms shall have 12", upper and lowercase lettering 3. Update clearance (yellow and red) and pedestrian intervals to current standards of practice
Misc. Comments	
1. The signal controller appears to be ready for fiber optic communication and fiber optic cable appears to be present within the cabinet. However there is no distribution panel and jumpers connecting the controller to the fiber optic cable.	

Budget Needs

Intersection	Item	Period for Modification		
		Short-Term (0-2 Years)	Mid-Term (2-5 Years)	Long-Term (5-15 Years)
5th Ave S & S 30th St	Implement Flashing Yellow Arrows			$25,000
	Annual Maintenance	$800	$1,200	$4,000
Total		$800	$1,200	$29,000

SIGNAL EQUIPMENT DATA

INTERSECTION: 5th Ave S & S 30th St

DATE: 6/26/14

POWER: Underground

ZONE: 5

ID: 530

CONTROLLER:

BRAND: Siemens M50

MODEL:8130-1200-001

Serial number: 127018

SOFTWARE VER:

DETECTORS:

LOOP: Econolite

VIDEO: Autoscope Terra Access Point

PUSHBUTTONS: Yes

POLE DATA

POLE NO.	POLE TYPE	POLE MATL.	TYPE OF BASE	ARM LENGTH / PEDSTL. HEIGHT		REMARKS
1	4	2	2	30		Lightpost with W/DW
2	4	2	2	12		PB and W/DW facing west
3	3	2	2	40		
4	4	2	2	12		W/DW not facing straight
5	3	2	2	40		
6	3	2	2	40		

POLE TYPE
1. SINGLE MAST ARM
2. TWIN MAST ARM
3. COMBINATION
4. PEDESTAL
5. UTILITY
6. OTHER

POLE MATL.
1. ALUMINUM
2. STEEL
3. WOOD
4. OTHER

TYPE OF BASE
1. PLATE
2. STEEL TRANSFORMER
3. ALUM. TRANSFORMER

AUXILIARY EQUIPMENT

VIDEO: Autosope Terra Access Point

Model: Solo Terra

CONFLICT MONITOR: Reno MMU-1600D

DETECTOR AMP

PRE-EMPTION

BATTERY BACK-UP: Techpower Developments

Double conversion digital UPS

3 Batteries

COMMUNICATION

SIGNAL TIMING DATA

INTERSECTION: 5th Ave S & S 30th St

CONTROLLER: Siemens M50

DATE: 6/26/14

Basic Timing Data

	Ph1 -WBL	Ph2 - EB	Ph3 -	Ph4 -	Ph5 - WB	Ph6 -	Ph7 -	Ph8 - NB
Min Grn	10	15	10	5	10	15	10	15
Passage	4.0	5.0	4.0	5.0	4.0	5.0	4.0	5.0
Max 1	25	50	25	20	25	50	25	35
Max 2	30	50	30	50	30	50	30	50
Yellow	4.0	4.0	4.0	4.0	4.0	4.0	4.0	4.0
Red Clr	1.0	1.0	1.0	1.0	1.0	1.0	1.0	1.0
Walk	0	7	0	8	0	7	0	7
Ped Clear	0	8	0	15	0	8	0	8
Recall		Min				Min		
Lock/Non	Non			Non				
Act/Non-Act		Non		Non		Non		Non

Coordination Plan Data

Dial 1/Split 1 Cycle: Offset:

Phase	1	2	3	4	5	6	7	8
Time	0	0	0	0	0	0	0	0
Mode	0	0	0	0	0	0	0	0

Active Periods:

Dial 2/Split 1 Cycle: Offset:

Phase	1	2	3	4	5	6	7	8
Time								
Mode								

Active Periods:

Dial 3/Split 1 Cycle: Offset:

Phase	1	2	3	4	5	6	7	8
Time								
Mode								

Active Periods:

Phasing

N

INDICATE NORTH

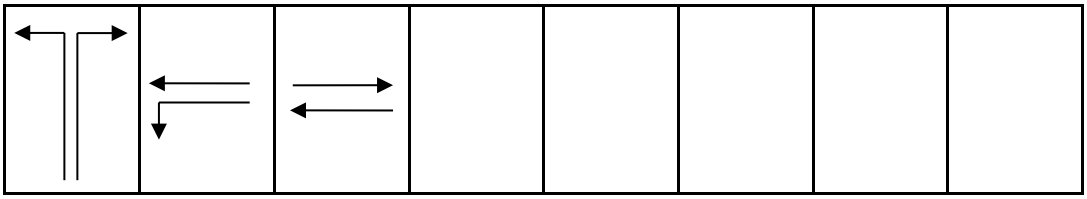

8 1 & 6 2 & 6

530

SIGNAL LAYOUT: S 30th St + 5th Ave S

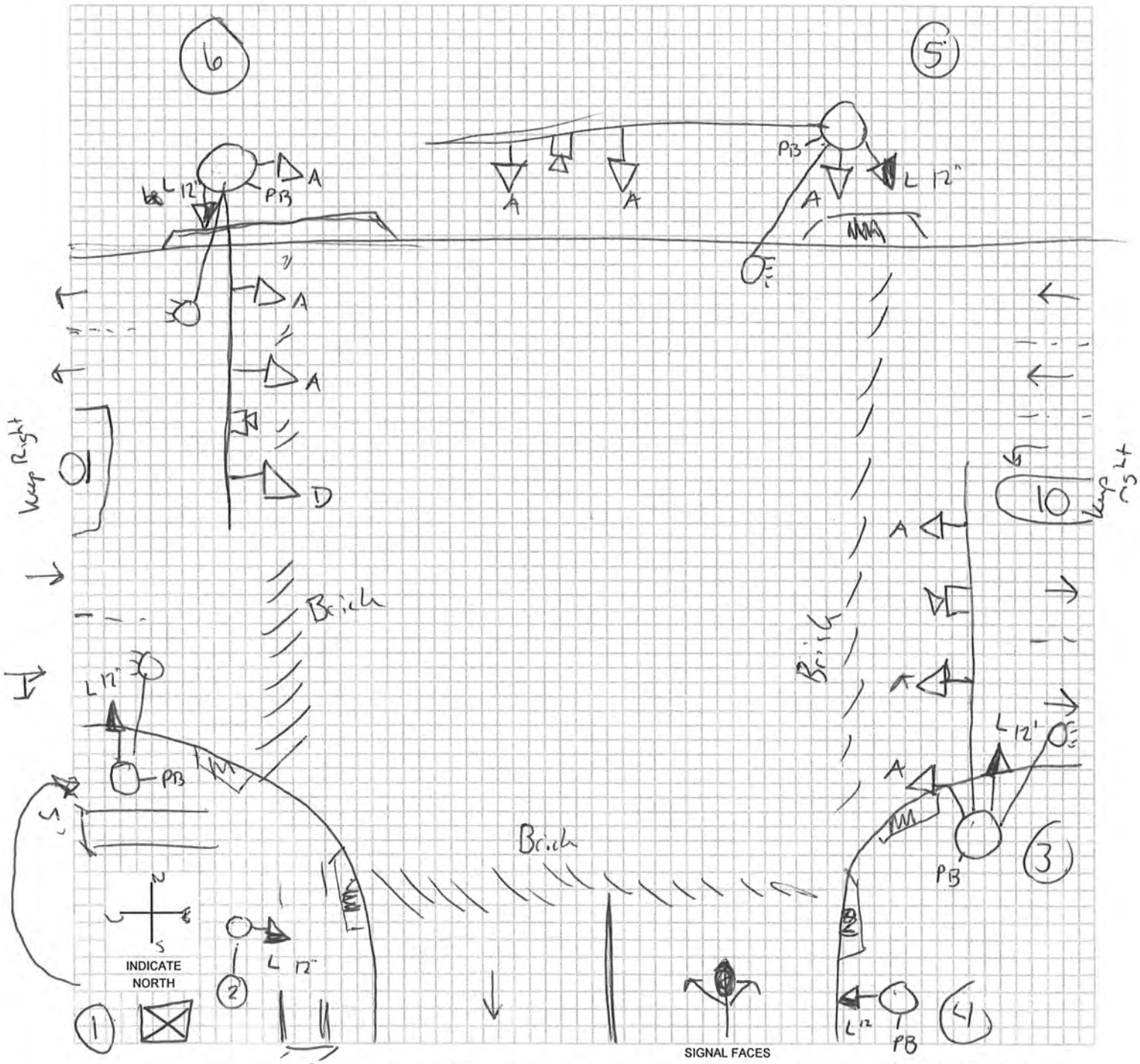

SIGNAL FACES

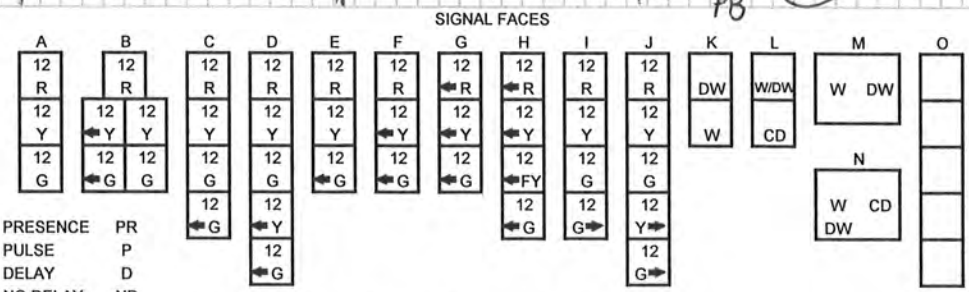

LEGEND

- (7) POLE & NUMBER
- SIGNAL INDICATION
- PEDESTRIAN SIGNAL INDICATION
- PB PUSHBUTTON
- 00-00-PD LOOP DECTETOR
- DISTANCE FROM STOP LINE - AREA OF DETECTION - PRESENCE PR; PULSE P; DELAY D; NO DELAY ND; EXTENSION E
- CONTROLLER
- (M) METER
- VIDEO DET CAMERA

-* OPTICALLY PROGRAMMABLE

Intersection: 5th Ave S & S 30th St ID#: 530

Crash Summary	**Trends**
1. Crash rate is below the statewide average (0.15 crashes/MEV). 2. 2 of the 8 crashes were injury crashes. There was a fatal crash in 2011. An elderly driver (81) struck a construction vehicle. 3. Other/unknown (50%) and swerving/evasive action (25%) were reported most frequently as the major causes (2 crashes indicated the surface condition was wet, ice, snow, or slush). 4. No fixed objects were struck 5. 75% of the crashes occurred between 12 PM and 6 PM 6. 24% of the drivers involved in the crashes were under the age of 30. 24% were over 60.	1. Most of the crashes (5) have occurred since January 2011 2. 88% of the crashes were rear-end crashes 3. Most crashes involve eastbound traffic
Mitigation Options / Potential Improvements	
1. Implement coordination timings will reduce the potential for rear-end collisions and drivers running the traffic signal. 2. Other intersection improvements were made in 2011.	
Funding Potential	
1. At this time, funding is only needed to implement coordination timings.	

Cost Opinion

Intersection	Item	Period for Modification		
		Short-Term (0-2 Years)	Mid-Term (2-5 Years)	Long-Term (5-15 Years)
5th Ave S & S 30th St	None			
Total				

Intersection Crash Summary

Location: 5th Ave S & S 30th St
City/County: Fort Dodge, Webster County
Time Period: 2004- May 2014 Crash Period = 10.5 years
Prepared by: OMV

NUMBER OF CRASHES

1	Fatal Crashes	1 fatalities	1 injuries
0	Major Injury Crashes		0 injuries
0	Minor Injury Crashes		0 injuries
1	Possible/Unknown Injury Crashes		1 injuries
6	Property Damage Only Crashes		
Totals: 8	Crashes	1 fatalities	2 injuries

CRASH RATES

Total Crash Rate =	8	/	52.20 MEV	=	0.15 Total Crashes/MEV
Fatal Crash Rate =	1	/	52.20 MEV	=	0.02 Fatal Crashes/MEV
Fatal/Injury Crash Rate =	2	/	52.20 MEV	=	0.04 F & I Crashes/MEV

CRASH FREQUENCY

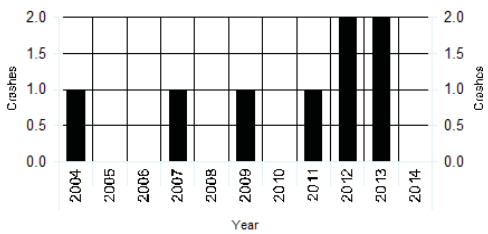

CRASH TYPE

0 Head-on	0 Sideswipe, Same Direction	Non Vehicle Collision Type
7 Rear-end Crash	0 Sideswipe, Opposite Direction	0 Pedestrian
0 Broadside/Right angle Crash	0 Parked	0 Bicycle
0 Angle, Oncoming Left Turn	0 Other	0 Fixed Object
0 Backing	1 Unknown	

TRAFFIC - AADT

North Approach =	0
South Approach =	1640
East Approach =	13000
West Approach =	12600
Million Entering Vehicles (MEV) =	52.20

Notes:
IDOT 2007 AADT

S 30th St and 5th Ave S

2004 - 2014 Reportable Crashes

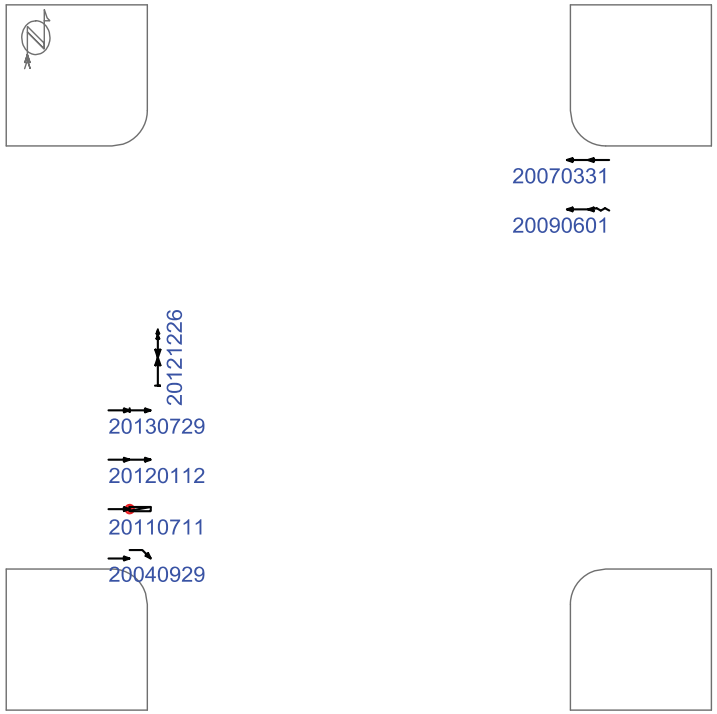

(0) crashes could not be placed in this schematic

Straight
Stopped
Unknown
Backing
Overtaking
Sideswipe
Parked
Erratic
Out of control
Right turn
Left turn
U-turn
Pedestrian
Bicycle
Injury
Fatality
Nighttime
DUI
Fixed objects:
General
Signal
Tree
Pole
Curb
Animal
3rd vehicle
Extra data

Pd' Programming, Inc. 07/14/2014

Iowa Department of Transportation

Major Cause Summary

S 30th St and 5th Ave S

Report Version 1.1 Jan 2005

Analysis Years: 2004 [1], 2007 [1], 2009 [1], 2011 [1], 2012 [2], 2013 [2]

Crash Summary:

Fatal	1
Major Injury	-
Minor Injury	-
Possible/Unknown	1
PDO	6
Total Crashes	8

Injury Summary:

Fatal	1
Major Injury	-
Minor Injury	-
Possible	1
Unknown	-
Total Injuries	2

TOT Property Damage: $29,500

AVG Property Damage: $3,688

Surface Condition Summary:

Dry	6
Wet	1
Ice	1
Snow	-
Slush	-
Sand/Dirt/Oil/Gravel	-
Water	-
Other	-
Unknown	-
Not Reported	-
Total Crashes	8

Major Cause Summary:

	Animal		Improper Backing
	Ran Traffic Signal		Illegally Parked/Unattended
	Ran Stop Sign	2	Swerving/Evasive Action
	Crossed Centerline		Over-Correcting/Over-Steering
	FTYROW: At Uncontrolled Intersection		Downhill Runaway
	FTYROW: Making Right Turn on Red Signal		Equipment Failure
	FTYROW: From Stop Sign		Separation of Units
	FTYROW: From Yield Sign		Ran Off Road - Right
	FTYROW: Making Left Turn		Ran Off Road - Straight
	FTYROW: From Driveway		Ran Off Road - Left
	FTYROW: From Parked Position		Lost Control
	FTYROW: To Pedestrian		Inattentive/Distracted By: Passenger
	FTYROW: Other (explain in narrative)		Inattentive/Distracted By: Use of Phone or Other
	Traveling Wrong Way or on Wrong Side of Rd		Inattentive/Distracted By: Fallen Object
1	Driving Too Fast for Conditions		Inattentive/Distracted By: Fatigued/Asleep
	Exceeded Authorized Speed		Other: Vision Obstructed
	Made Improper Turn		Oversized Load/ Oversized Vehicle
	Improper Lane Change		Cargo/Equipment Loss or Shift
1	Followed Too Close	3	Other: Other Improper Action
	Disregarded Railroad Signal	1	Unknown
	Disregarded Warning Sign		Other: No Improper Action
	Operating Vehicle in Reckless/Aggressive Manner		None Indicated

Selection Filter:

None

Analyst: OMV

Notes: Radius = 150'

Iowa Department of Transportation

Driver and Time Summary

S 30th St and 5th Ave S

Report Version 1.0 Aug 2006

Crash Time of Day Summary:

From / To	00:00 01:59	02:00 03:59	04:00 05:59	06:00 07:59	08:00 09:59	10:00 11:59	12:00 13:59	14:00 15:59	16:00 17:59	18:00 19:59	20:00 21:59	22:00 23:59	NR	Total	%
SUN	-	-	-	-	-	-	-	-	-	-	-	-	-		
MON	-	-	-	-	-	-	2	-	1	1	-	-	-	4	50
TUE	-	-	-	-	-	-	-	-	-	-	-	-	-		
WED	-	-	-	-	-	-	1	-	1	-	-	-	-	2	25
THU	-	-	-	-	1	-	-	-	-	-	-	-	-	1	12
FRI	-	-	-	-	-	-	-	-	-	-	-	-	-		
SAT	-	-	-	-	-	-	1	-	-	-	-	-	-	1	12
Tot.					1		4		2	1				8	
%					12		50		25	12					100

Driver Age/Gender Summary:

Age	Male	Female	NR	Drivers	%
<14	-	-	-		
14	-	-	-		
15	-	-	-		
16	-	-	-		
17	-	1	-	1	6
18	-	-	-		
19	-	-	-		
20	-	1	-	1	6
21 to 24	1	-	-	1	6
25 to 29	-	1	-	1	6
30 to 34	1	-	-	1	6
35 to 39	-	-	-		
40 to 44	-	1	-	1	6
45 to 49	-	-	-		
50 to 54	2	1	-	3	18
55 to 59	1	1	-	2	12
60 to 64	-	1	-	1	6
65 to 69	1	-	-	1	6
70 to 74	-	-	-		
75 to 79	-	-	-		
80 to 84	1	1	-	2	12
85 to 89	-	-	-		
90 to 94	-	-	-		
95 plus	-	-	-		
NR	1	-	1	2	12
Drivers	8	8	1	17	
%	47	47	6		100

Drug/Alcohol Summary:

	Total	%
Drug		
Alcohol, Less than Statutory		
Alcohol, Statutory		
Drug/Alcohol, Less than Statutory		
Drug/Alcohol, Statutory		
Refused		
Under Influence of Alc/Drugs/Meds		
None Indicated	8	100
Total Crashes	8	100

Fixed Object Struck Summary:

	Vehs.	%
Bridge/Bridge rail/Overpass		
Underpass/Structure Support		
Culvert		
Ditch/Embankment		
Curb/Island/Raised Median		
Guardrail		
Concrete Barrier		
Tree		
Pole - Utility/Light/Etc		
Sign Post		
Mailbox		
Impact Attenuator		
Other Fixed Object		
None	17	100
Total Vehicles	17	100

Selection Filter:

None

Analyst: OMV

Notes: Radius = 150'

Intersection: 5th Ave S & S 30th St ID#: 530

Lane Width	**Turn Lanes**
Approaching (no N approach) S: 12 ft E/W: 12 ft	Left turn lanes on E approach No right turn lanes Signage indicates 2 northbound lanes, however, there is only 30 ft from 5th Ave S to the taper to a single northbound lane (taper is only 35 ft)
Sidewalk/ADA Ramps	**Lighting**
5' wide sidewalks exist along 5th Ave S on every approach. There are sidewalk ramps and detectable warning panels in all corners. There is a 5' wide sidewalk along the west side of S 30th St.	There are combination signal/lighting poles located in all corners of the intersection. There is street lighting on the E/W approaches to the intersection. The light poles and combination poles at the intersection utilize the City's decorative lighting arms and fixtures.
Parking	**Access/Driveways**
No parking existing along both streets near the intersection.	There are commercial driveways to every approach, however the nearest driveway is 100 ft from the intersection. There is a residential driveway located 40 ft south of the intersection.
Miscellaneous	
1. The signal pole footings on the north side of the intersection extend above the adjacent sidewalk. Since these are located outside of the sidewalk, they are not a problem for people walking on the sidewalk. These do not need to be replaced, but be if funds are available.	

Cost Opinion

Intersection	Item	Period for Modification		
		Short-Term	Mid-Term	Long-Term
		(0-2 Year)	(2-5 Years)	(5-15 Years)
5th Ave S & S 30th St	Replace Pole Footing to be Flush with Sidewalk			$10,000
Total				$10,000

CLICK TO RETURN TO SIGNAL LOCATION MAP

5th Ave S & S 31st St ID#: 531

Intersection: 5th Ave S & S 31st St ID#: 531

Signal Evaluation	MUTCD Issues
1. Siemens Eagle M41 signal controller 2. Iteris Vantage Plus video detection 3. Protected/permissive left turn phasing for E/W/N approaches; permissive only S approach 4. There is evidence of the NE signal pole being struck 5. Does have communication equipment: has distribution panel but nothing connected to it 6. Does have battery back-up system	1. Have circular indications over left turn lanes. Acceptable per previous MUTCD. Should be changed to flashing yellow arrow (arrow only heads) to comply with 2009 Edition. 2. When replacing street name signs, signs on mast arms shall have 12", upper and lowercase lettering 3. Update clearance (yellow and red) and pedestrian intervals to current standards of practice

Misc. Comments

1. Signal poles appear to have been painted on site. Paint was missed in places and chipping off in others. Paint on signal poles should be touched up and checked on a yearly basis for touch ups.
2. Pushbuttons and signs are damaged and should be replaced
3. The left only (R3-5) and left turn lane yield on green (R10-12) signs are both not needed N/S. The City could remove the left only sign for each approach and leave the left turn yield on green signs, touch up paint. Once flashing yellow arrow is implemented, neither sign is needed.
4. The pedestrian pushbuttons are located on the signal poles. The signal pole placement is good for one crossing, but not too well for the other. Install pedestal poles closer to the 2nd ramps in each corner.

Budget Needs

Intersection	Item	Period for Modification		
		Short-Term (0-2 Years)	Mid-Term (2-5 Years)	Long-Term (5-15 Years)
5th Ave S & S 31st St	Straighten/Replace Left Turn Yield on Green sign (unless Implementing FYA)	$100		
	Replace damaged Pushbutton & sign	$300		
	Install Pushbutton Poles so closer to Sidewalk Ramps	$6,000		
	Repair/Replace Damaged Signal Pole	$10,000		
	Replace/Upgrade Controller and Cabinet			$20,000
	Implement Flashing Yellow Arrows			$30,000
	Annual Maintenance	$800	$1,200	$4,000
Total		$17,200	$1,200	$54,000

SIGNAL EQUIPMENT DATA

INTERSECTION: 5th Ave S & S 31st St

DATE: 6/26/14

POWER: Underground

ZONE: 5

ADDRESS:

ID: 531

CONTROLLER:
BRAND: Eagle Traffic Control Systems
MODEL: EPAC 3808M41

SOFTWARE VER:

DETECTORS:
LOOP:

VIDEO: Iteris Vantage Plus

PUSHBUTTONS: Yes

POLE DATA

POLE NO.	POLE TYPE	POLE MATL.	TYPE OF BASE	ARM LENGTH / PEDSTL. HEIGHT		REMARKS
1	3	2	2	40		PB doesn't work, missing PB sign, left turn yield on green sign bent
2	3	2	2	30		
3	3	2	2	36		Paint chipped, scraped, looks to be hit
4	3	2	2	36		

POLE TYPE
1. SINGLE MAST ARM
2. TWIN MAST ARM
3. COMBINATION
4. PEDESTAL
5. UTILITY
6. OTHER

POLE MATL.
1. ALUMINUM
2. STEEL
3. WOOD
4. OTHER

TYPE OF BASE
1. PLATE
2. STEEL TRANSFORMER
3. ALUM. TRANSFORMER

AUXILIARY EQUIPMENT

VIDEO: Iteris Vantage Plus

PRE-EMPTION:

CONFLICT MONITOR: EDI MMU-16

BATTERY BACK-UP: Tech Power Developments
Double Conversion Digital UPS with 3 batteries

DETECTOR AMP: None

COMMUNICATION:

SIGNAL TIMING DATA

INTERSECTION: 5th Ave S & S 31st St

CONTROLLER: Eagle Traffic Control Systems

DATE: 6/26/14 - Existing Timings

Basic Timing Data

	Ph1 -WBL	Ph2 - EB	Ph3 -SBL	Ph4 - NB	Ph5 -EBL	Ph6 - WB	Ph7 -	Ph8 - SB
Min Grn	5	15	5	5	5	15	5	5
Passage	3.5	5.0	3.5	3.5	3.5	5.0	3.5	3.5
Max 1	15	35	15	15	15	35	25	15
Max 2	30	50	30	50	30	50	30	50
Yellow	4.0	4.0	4.0	4.0	4.0	4.0	4.0	4.0
Red Clr	1.0	1.0	1.0	1.0	1.0	1.0	1.0	1.0
Walk	0	8	0	8	0	8	0	8
Ped Clear	0	12	0	18	0	12	0	18
Recall		MIN		MIN		MIN		MIN
Lock/Non	NON	NON	NON	NON	NON	NON	NON	NON
Act/Non-Act		NON		NON		NON		

Coordination Plan Data

NOT IN COORDINATION

Dial 1/Split 1 Cycle: Offset:

Phase	1	2	3	4	5	6	7	8
Time								
Mode								

Active Periods:

Dial 2/Split 1 Cycle: Offset:

Phase	1	2	3	4	5	6	7	8
Time								
Mode								

Active Periods:

Dial 3/Split 1 Cycle: Offset:

Phase	1	2	3	4	5	6	7	8
Time								
Mode								

Active Periods:

Phasing

N

INDICATE NORTH

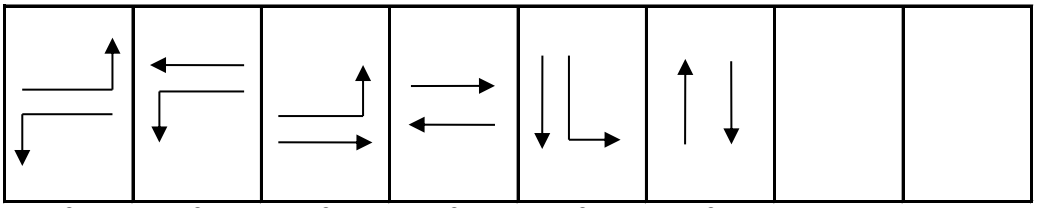

1 & 5 1 & 6 2 & 5 2 & 6 3 & 8 4 & 8

City of Fort Dodge

531

SIGNAL LAYOUT: S 31st St + 5th Ave S

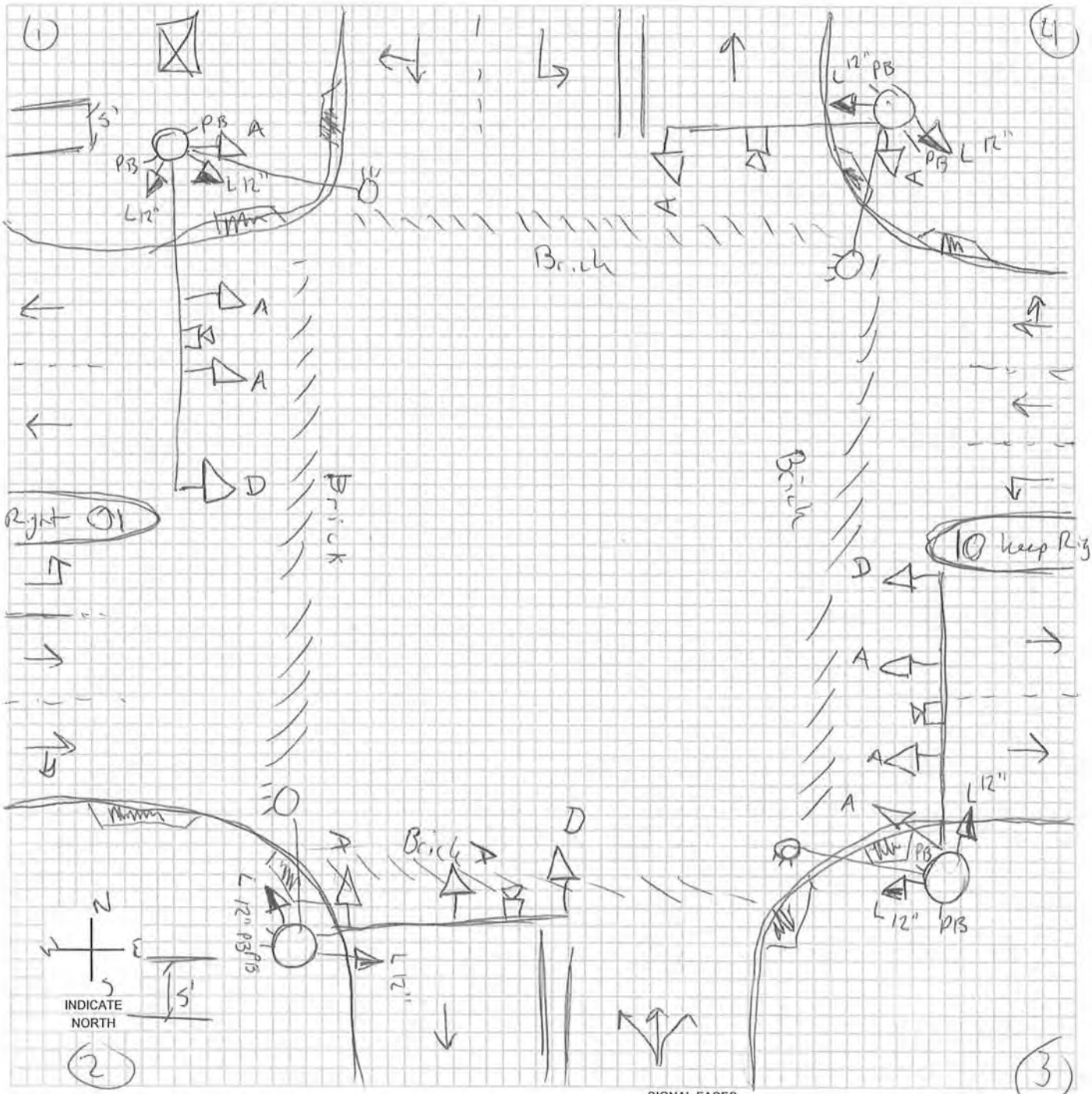

SIGNAL FACES

A	B	C	D	E	F	G	H	I	J	K	L	M	O
12 R	12 R	12 R	12 R	12 R	12 R	12 ◄R	12 ◄R	12 R	12 R	DW	W/DW	W DW	
12 Y	12 ◄Y / 12 Y	12 Y	12 Y	12 Y	12 ◄Y	12 ◄Y	12 ◄Y	12 Y	12 Y	W	CD		
12 G	12 ◄G / 12 G	12 G	12 G	12 ◄G	12 ◄G	12 ◄G	12 ◄FY	12 G	12 G				
		12 ◄G	12 ◄Y				12 ◄G	12 G►	12 Y►			N: W CD DW	
			12 ◄G						12 G►				

LEGEND

- POLE & NUMBER
- SIGNAL INDICATION
- PEDESTRIAN SIGNAL INDICATION
- PB PUSHBUTTON
- 00-00-PD LOOP DECTETOR
- DISTANCE FROM STOP LINE - AREA OF DETECTION - PRESENCE PR; PULSE P; DELAY D; NO DELAY ND; EXTENSION E
- CONTROLLER
- METER
- VIDEO DET CAMERA

-* OPTICALLY PROGRAMMABLE

Intersection: 5th Ave S & S 31st St ID#: 531

Crash Summary	**Trends**
1. Crash rate is below the statewide average (0.41 crashes/MEV). 2. 6 of the 22 crashes were injury crashes. There was a major injury crash. 3. Ran traffic signal (27%) was reported most frequently as the major cause (7 crashes indicated the surface condition was wet, ice, snow, or slush). 4. One vehicle was reported as striking a fixed object: a pole (1) 5. 82% of the crashes occurred between 10 AM and 6 PM 6. 36% of the drivers involved in the crashes were under the age of 30.	1. The intersection experiences between 1 and 3 crashes per year. The only exceptions to this are 2011 (6) and 2012 (0). 2. 45% were broadside/right angle crashes and 32% were rear-end crashes 3. Most crashes involve E/W traffic
Mitigation Options / Potential Improvements	
1. Implement coordination timings will reduce the potential for rear-end collisions and drivers running the traffic signal. 2. Other intersection improvements were made in 2011.	
Funding Potential	
1. At this time, funding is only needed to implement coordination timings.	

Cost Opinion

Intersection	Item	Period for Modification		
		Short-Term (0-2 Years)	Mid-Term (2-5 Years)	Long-Term (5-15 Years)
5th Ave S & S 31st St	None			
Total				

Intersection Crash Summary

Location: 5th Ave S & S 31st St
City/County: Fort Dodge, Webster County
Time Period: 2004- May 2014 Crash Period = 10.5 years
Prepared by: OMV

NUMBER OF CRASHES

0	Fatal Crashes	0 fatalities	0 injuries
1	Major Injury Crashes		1 injuries
1	Minor Injury Crashes		1 injuries
4	Possible/Unknown Injury Crashes		4 injuries
16	Property Damage Only Crashes		
Totals: 22	Crashes	0 fatalities	6 injuries

CRASH RATES

Total Crash Rate =	22	/	53.08 MEV	=	0.41 Total Crashes/MEV
Fatal Crash Rate =	0	/	53.08 MEV	=	0.00 Fatal Crashes/MEV
Fatal/Injury Crash Rate =	6	/	53.08 MEV	=	0.11 F & I Crashes/MEV

CRASH FREQUENCY

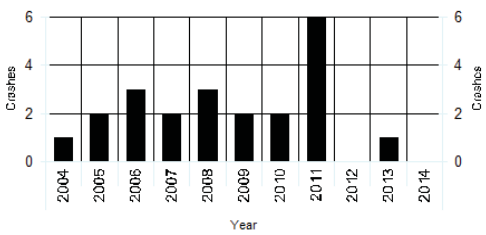

CRASH TYPE

1	Head-on	1	Sideswipe, Same Direction	0	Pedestrian
7	Rear-end Crash	0	Sideswipe, Opposite Direction	0	Bicycle
10	Broadside/Right angle Crash	0	Parked	1	Fixed Object
1	Angle, Oncoming Left Turn	0	Other	1	No Object Reported
0	Backing	0	Unknown		

Non Vehicle Collision Type

TRAFFIC - AADT

North Approach =	1000
South Approach =	1500
East Approach =	12600
West Approach =	12600
Million Entering Vehicles (MEV) =	53.08

Notes:
Estimated

S 31st St and 5th Ave S

2004 - 2014 Reportable Crashes

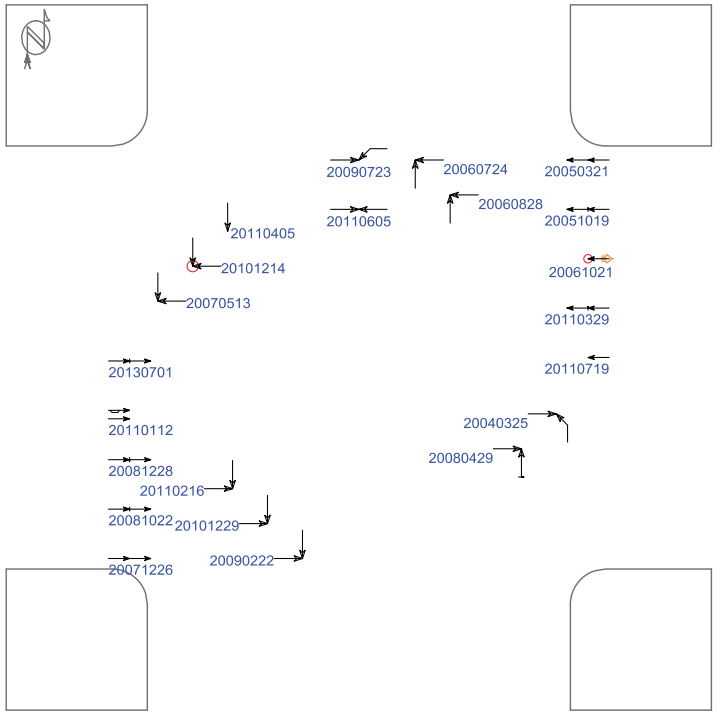

(0) crashes could not be placed in this schematic

Straight, Stopped, Unknown, Backing, Overtaking, Sideswipe, Parked, Erratic, Out of control, Right turn, Left turn, U-turn, Pedestrian, Bicycle, Injury, Fatality, Nighttime, DUI

Fixed objects: General, Signal, Tree, Pole, Curb, Animal

3rd vehicle, Extra data

Pd' Programming, Inc. 07/14/2014

Iowa Department of Transportation

Major Cause Summary

S 31st St and 5th Ave S

Report Version 1.1 Jan 2005

Analysis Years: 2004 [1], 2005 [2], 2006 [3], 2007 [2], 2008 [3], 2009 [2], 2010 [2], 2011 [6], 2013 [1]

Crash Summary:

Fatal	-
Major Injury	1
Minor Injury	1
Possible/Unknown	4
PDO	16
Total Crashes	22

Injury Summary:

Fatal	-
Major Injury	1
Minor Injury	1
Possible	4
Unknown	-
Total Injuries	6

TOT Property Damage: $111,200

AVG Property Damage: $5,055

Surface Condition Summary:

Dry	15
Wet	6
Ice	-
Snow	1
Slush	-
Sand/Dirt/Oil/Gravel	-
Water	-
Other	-
Unknown	-
Not Reported	-
Total Crashes	22

Major Cause Summary:

	Animal		Improper Backing
6	Ran Traffic Signal		Illegally Parked/Unattended
	Ran Stop Sign		Swerving/Evasive Action
	Crossed Centerline		Over-Correcting/Over-Steering
	FTYROW: At Uncontrolled Intersection		Downhill Runaway
	FTYROW: Making Right Turn on Red Signal		Equipment Failure
	FTYROW: From Stop Sign		Separation of Units
	FTYROW: From Yield Sign	1	Ran Off Road - Right
2	FTYROW: Making Left Turn		Ran Off Road - Straight
	FTYROW: From Driveway		Ran Off Road - Left
	FTYROW: From Parked Position		Lost Control
	FTYROW: To Pedestrian		Inattentive/Distracted By: Passenger
2	FTYROW: Other (explain in narrative)		Inattentive/Distracted By: Use of Phone or Other
	Traveling Wrong Way or on Wrong Side of Rd		Inattentive/Distracted By: Fallen Object
1	Driving Too Fast for Conditions		Inattentive/Distracted By: Fatigued/Asleep
	Exceeded Authorized Speed		Other: Vision Obstructed
	Made Improper Turn		Oversized Load/ Oversized Vehicle
	Improper Lane Change		Cargo/Equipment Loss or Shift
2	Followed Too Close	5	Other: Other Improper Action
	Disregarded Railroad Signal	3	Unknown
	Disregarded Warning Sign		Other: No Improper Action
	Operating Vehicle in Reckless/Aggressive Manner		None Indicated

Selection Filter:

None

Analyst: OMV

Notes: Radius = 150'

Iowa Department of Transportation

Driver and Time Summary

S 31st St and 5th Ave S

Report Version 1.0 Aug 2006

Crash Time of Day Summary:

From / To	00:00 01:59	02:00 03:59	04:00 05:59	06:00 07:59	08:00 09:59	10:00 11:59	12:00 13:59	14:00 15:59	16:00 17:59	18:00 19:59	20:00 21:59	22:00 23:59	NR	Total	%
SUN	-	-	-	-	-	1	1	-	1	-	1	-	-	4	18
MON	-	-	-	-	-	-	1	3	-	-	-	-	-	4	18
TUE	-	-	-	-	1	-	2	1	-	-	1	-	-	5	23
WED	-	-	-	-	-	2	1	1	2	-	-	-	-	6	27
THU	-	-	-	-	-	1	1	-	-	-	-	-	-	2	9
FRI	-	-	-	-	-	-	-	-	-	-	-	-	-		
SAT	-	-	-	1	-	-	-	-	-	-	-	-	-	1	5
Tot.				1	1	4	6	5	3		2			22	
%				5	5	18	27	23	14		9				100

Driver Age/Gender Summary:

Age	Male	Female	NR	Drivers	%
<14	-	-	-		
14	-	-	-		
15	-	-	-		
16	1	1	-	2	5
17	-	2	-	2	5
18	-	2	-	2	5
19	1	2	-	3	7
20	1	1	-	2	5
21 to 24	1	-	-	1	2
25 to 29	1	2	-	3	7
30 to 34	2	1	-	3	7
35 to 39	3	1	-	4	9
40 to 44	1	2	-	3	7
45 to 49	5	3	-	8	18
50 to 54	-	-	-		
55 to 59	6	-	-	6	14
60 to 64	2	-	-	2	5
65 to 69	1	-	-	1	2
70 to 74	-	-	-		
75 to 79	-	-	-		
80 to 84	-	1	-	1	2
85 to 89	-	-	-		
90 to 94	-	-	-		
95 plus	-	-	-		
NR	-	-	1	1	2
Drivers	25	18	1	44	
%	57	41	2		100

Drug/Alcohol Summary:

	Total	%
Drug		
Alcohol, Less than Statutory		
Alcohol, Statutory		
Drug/Alcohol, Less than Statutory		
Drug/Alcohol, Statutory		
Refused		
Under Influence of Alc/Drugs/Meds		
None Indicated	22	100
Total Crashes	22	100

Fixed Object Struck Summary:

	Vehs.	%
Bridge/Bridge rail/Overpass		
Underpass/Structure Support		
Culvert		
Ditch/Embankment		
Curb/Island/Raised Median		
Guardrail		
Concrete Barrier		
Tree		
Pole - Utility/Light/Etc	1	2
Sign Post		
Mailbox		
Impact Attenuator		
Other Fixed Object		
None	43	98
Total Vehicles	44	100

Selection Filter:

None

Analyst: OMV

Notes: Radius = 150'

Intersection: 5th Ave S & S 31st St ID#: 531

Lane Width	**Turn Lanes**
Approaching N/S: 12 ft E/W: 12 ft	Left turn lanes on E/W/N approaches No right turn lanes
Sidewalk/ADA Ramps	**Lighting**
5' wide sidewalks exist along 5th Ave S along both sides west of the intersection. 5' wide sidewalks exist along the west side of S 31st St south of 5th Ave S and along the east side north of 5th Ave S. There are sidewalk ramps and detectable warning panels in all corners for all crossing movements.	There are combination signal/lighting poles located in all corners of the intersection. There is street lighting on the E/W approaches to the intersection. The light poles and combination poles at the intersection utilize the City's decorative lighting arms and fixtures.
Parking	**Access/Driveways**
No parking existing along both streets near the intersection.	There are 2 commercial driveways within 200 ft of the intersection. They are located south along S 31st St. One driveway is 30 ft from the intersection (to the east) and the other is 150 ft (to the west).
Miscellaneous	
1. The detectable warning panels (bricks) in the NW corner for crossing 5th Ave S are not compliant with the current ADA requirements. Current requirements require the panels to be within 5 ft of the intersection return. Plus these same panels are located so that someone could potentially walk from the sidewalk, between the panels and the return, out into the intersection without crossing panels. The traffic signal pole in this corner is located less than 1 ft from the detectable panels.	

Cost Opinion

Intersection	Item	Period for Modification		
		Short-Term (0-2 Years)	Mid-Term (2-5 Years)	Long-Term (5-15 Years)
5th Ave S & S 31st St	Replace NW Ramp (ADA Compliant)		$1,500	
Total			$1,500	

CLICK TO RETURN TO SIGNAL LOCATION MAP

5th Ave S & S 32nd St ID#: 532

Intersection: 5th Ave S & S 32nd St ID#: 532

Signal Evaluation	MUTCD Issues
1. Siemens Eagle M41 signal controller 2. Iteris Vantage Plus video detection 3. Protected/permissive left turn phasing for all approaches 4. Does have communication equipment, the controller is connected to the distribution panel, and a large amount of fiber optic cable is coiled within the cabinet 5. Does not have battery back-up system	1. Have circular indications over left turn lanes. Acceptable per previous MUTCD. Should be changed to flashing yellow arrow (arrow only heads) to comply with 2009 Edition. 2. When replacing street name signs, signs on mast arms shall have 12", upper and lowercase lettering 3. Update clearance (yellow and red) intervals to current standards of practice
Misc. Comments	
1. There is a pedestrian trail that runs N/S through the intersection, however, no pedestrian signal heads or pushbuttons have been provided. Would require pedestal poles with current signal layout.	

Budget Needs

Intersection	Item	Period for Modification		
		Short-Term (0-2 Years)	Mid-Term (2-5 Years)	Long-Term (5-15 Years)
5th Ave S & S 32nd St	Install Pedestrian Signal Heads & Pushbuttons	$12,000		
	Install Battery Back-up System		$8,000	
	Relocate Signal Poles for Clear Zone		$20,000	
	Reconstruct Signal		$200,000	
	Replace/Upgrade Controller and Cabinet *			$20,000
	Implement Flashing Yellow Arrows *			$30,000
	Annual Maintenance	$800	$1,200	$4,000
Total		$12,800	$229,200	$54,000

*- Not needed if signal is reconstructed

SIGNAL EQUIPMENT DATA

INTERSECTION: 5th Ave S & S 32nd St

DATE: 6/26/14

POWER: Underground

ZONE: 5

ADDRESS:

ID: 532

CONTROLLER:
BRAND: Eagle Traffic Control
MODEL: EPAC 3808M41

SOFTWARE VER: OS # 3.32f (SEP 01)

DETECTORS:
LOOP: None

VIDEO: Iteris Vantage Plus

PUSHBUTTONS: None

POLE DATA

POLE NO.	POLE TYPE	POLE MATL.	TYPE OF BASE	ARM LENGTH / PEDSTL. HEIGHT		REMARKS
1	3	2	2	28		
2	3	2	2	40		Combination pole without the actual ligh
3	3	2	2	28		
4	3	2	2	50		

POLE TYPE
1. SINGLE MAST ARM
2. TWIN MAST ARM
3. COMBINATION
4. PEDESTAL
5. UTILITY
6. OTHER

POLE MATL.
1. ALUMINUM
2. STEEL
3. WOOD
4. OTHER

TYPE OF BASE
1. PLATE
2. STEEL TRANSFORMER
3. ALUM. TRANSFORMER

AUXILIARY EQUIPMENT

VIDEO: Iteris Vantage Plus

PRE-EMPTION: None

CONFLICT MONITOR: EDI MMU16

BATTERY BACK-UP: None

DETECTOR AMP:

COMMUNICATION: None

SIGNAL TIMING DATA

INTERSECTION: 5th Ave S & S 32nd St

CONTROLLER: Eagle Traffic Control

DATE:6/26/14 - Existing Timings

Basic Timing Data

	Ph1 - EBL	Ph2 - WB	Ph3 -SBL	Ph4 - NB	Ph5 -WBL	Ph6 - EB	Ph7 -NBL	Ph8 - SB
Min Grn	6	20	6	8	6	20	6	8
Passage	5.0	5.0	5.0	5.0	5.0	5.0	5.0	5.0
Max 1	25	50	20	30	25	50	20	30
Max 2	31	32	33	34	35	36	37	38
Yellow	4.0	5.0	3.5	3.0	4.0	5.0	3.5	3.0
Red Clr	0.0	1.0	0.0	1.0	0.0	1.0	0.0	1.0
Walk	0	2	0	2	0	2	0	2
Ped Clear	0	2	0	2	0	2	0	2
Recall	NONE	NONE	NONE	NONE	NONE	NONE	NONE	NONE
Lock/Non	NON	NON	NON	NON	NON	NON	NON	NON
Act/Non-Act		NON		NON		NON		NON

Coordination Plan Data

NOT IN COORDINATION

Dial 1/Split 1 Cycle: Offset:

Phase	1	2	3	4	5	6	7	8
Time								
Mode								

Active Periods:

Dial 2/Split 1 Cycle: Offset:

Phase	1	2	3	4	5	6	7	8
Time								
Mode								

Active Periods:

Dial 3/Split 1 Cycle: Offset:

Phase	1	2	3	4	5	6	7	8
Time								
Mode								

Active Periods:

Phasing

N

INDICATE NORTH

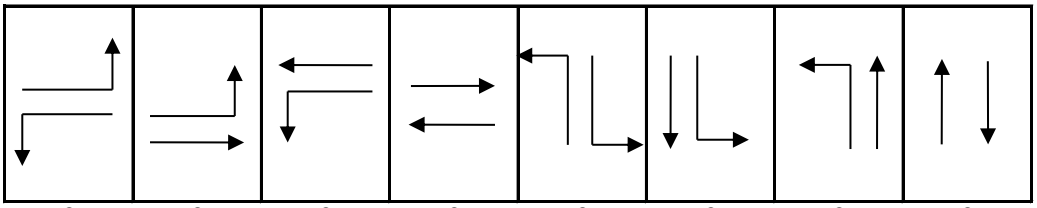

1 & 5 | 1 & 6 | 2 & 5 | 2 & 6 | 3 & 7 | 3 & 8 | 4 & 7 | 4 & 8

City of Fort Dodge

532

SIGNAL LAYOUT: S 32nd St + 5th Ave S

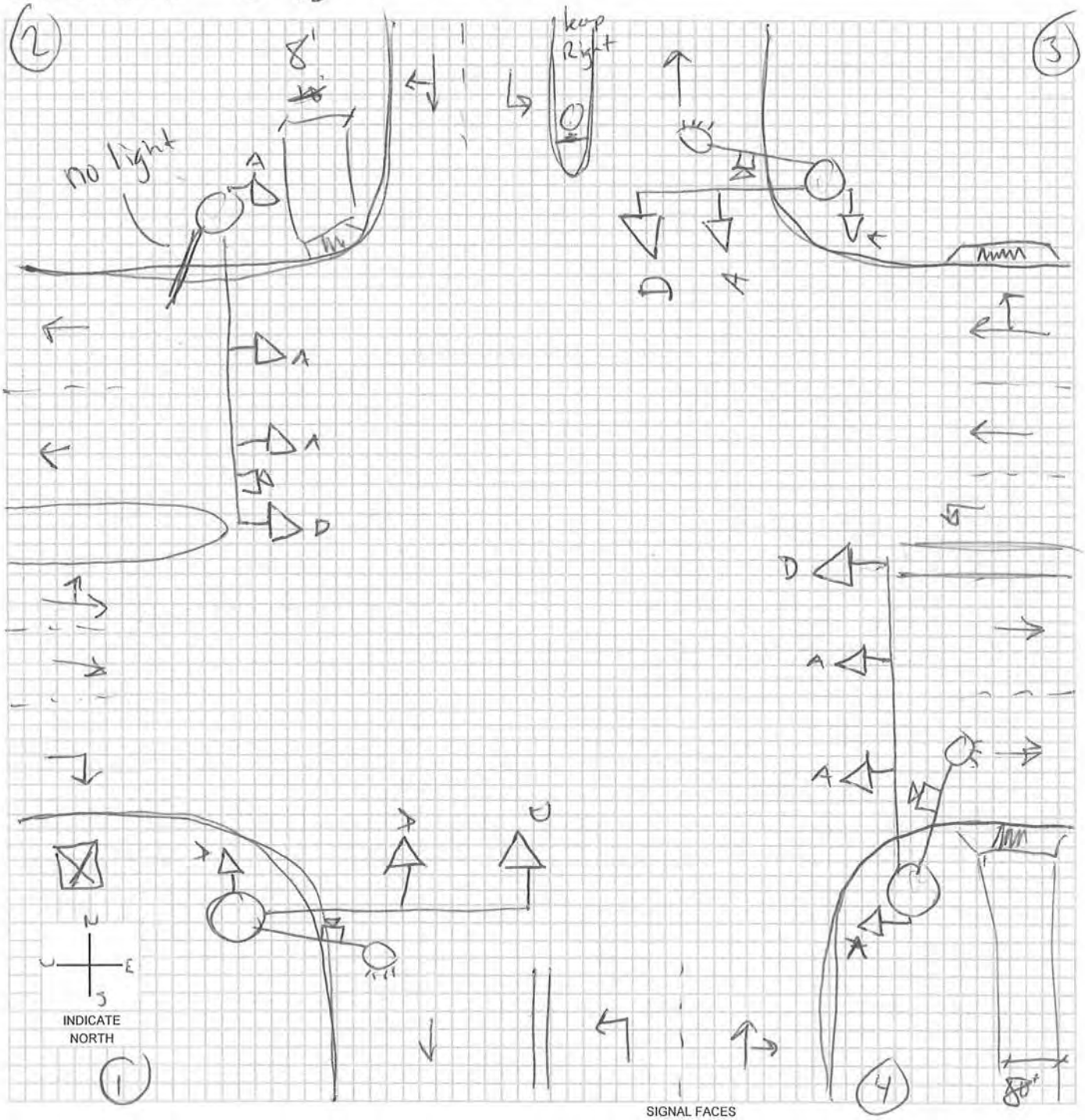

SIGNAL FACES

A	B	C	D	E	F	G	H	I	J	K	L	M	O
12 R	12 R	12 R	12 R	12 R	12 R	12 ◄R	12 ◄R	12 R	12 R	DW	W/DW	W DW	
12 Y	12 ◄Y / 12 Y	12 Y	12 Y	12 Y	12 ◄Y	12 ◄Y	12 ◄Y	12 Y	12 Y	W	CD		
12 G	12 ◄G / 12 G	12 G	12 G	12 ◄G	12 ◄G	12 ◄G	12 ◄FY	12 G	12 G			N: W CD DW	
		12 ◄G	12 ◄Y				12 ◄G	12 G►	12 Y►				
			12 ◄G						12 G►				

LEGEND

- (7) POLE & NUMBER
- SIGNAL INDICATION
- PEDESTRIAN SIGNAL INDICATION
- PB PUSHBUTTON
- 00-00-PD LOOP DECTETOR
- DISTANCE FROM STOP LINE - AREA OF DETECTION - PRESENCE PR; PULSE P; DELAY D; NO DELAY ND; EXTENSION E
- CONTROLLER
- (M) METER
- VIDEO DET CAMERA

-* OPTICALLY PROGRAMMABLE

Intersection: 5th Ave S & S 32nd St ID#: 532

Crash Summary	**Trends**
1. Crash rate is at the statewide average (0.89 crashes/MEV). 2. 16 of the 55 crashes were injury crashes. The most severe crashes were minor injury crashes. 3. Followed too close (18%), ran traffic signal (13%), and lost control (13%) were reported most frequently as the major causes (13 crashes indicated the surface condition was wet, ice, snow, or slush). 4. Four vehicles were reported as striking a fixed object: curb/island/raised median (2), ditch/embankment (1), and pole (1) 5. 73% of the crashes occurred between 10 AM and 8 PM 6. 23% of the drivers involved in the crashes were under the age of 30.	1. The intersection experiences between 4 and 8 crashes per year. The only exception to this is 2007 (3). 2. 60% were rear-end crashes 3. Most crashes involve westbound traffic
Mitigation Options / Potential Improvements	
1. Implement coordination timings will reduce the potential for rear-end collisions and drivers running the traffic signal.	
Funding Potential	
1. At this time, funding is only needed to implement coordination timings.	

Cost Opinion

Intersection	Item	Period for Modification		
		Short-Term (0-2 Years)	Mid-Term (2-5 Years)	Long-Term (5-15 Years)
5th Ave S & S 32nd St	None			
Total				

Intersection Crash Summary

Location: 5th Ave S & S 32nd St
City/County: Fort Dodge, Webster County
Time Period: 2004- May 2014 Crash Period = 10.5 years
Prepared by: OMV

NUMBER OF CRASHES

0	Fatal Crashes	0 fatalities	0 injuries
0	Major Injury Crashes		0 injuries
3	Minor Injury Crashes		6 injuries
13	Possible/Unknown Injury Crashes		19 injuries
39	Property Damage Only Crashes		
Totals: 55	Crashes	0 fatalities	25 injuries

CRASH RATES

Total Crash Rate =	55	/	62.03 MEV	=	0.89 Total Crashes/MEV
Fatal Crash Rate =	0	/	62.03 MEV	=	0.00 Fatal Crashes/MEV
Fatal/Injury Crash Rate =	16	/	62.03 MEV	=	0.26 F & I Crashes/MEV

CRASH FREQUENCY

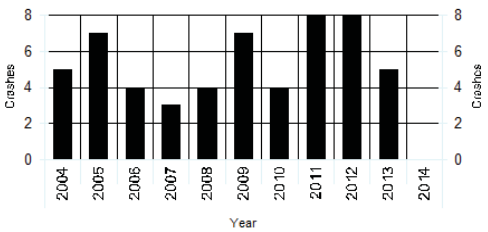

CRASH TYPE

1	Head-on	7	Sideswipe, Same Direction		Non Vehicle Collision Type
33	Rear-end Crash	1	Sideswipe, Opposite Direction	0	Pedestrian
5	Broadside/Right angle Crash	0	Parked	0	Bicycle
3	Angle, Oncoming Left Turn	0	Other	4	Fixed Object
0	Backing	1	Unknown		

TRAFFIC - AADT

North Approach =	7300
South Approach =	3170
East Approach =	11000
West Approach =	10900
Million Entering Vehicles (MEV) =	62.03

Notes:
IDOT 2011 AADT

S 32ndSt and 5th Ave S

2004 - 2014 Reportable Crashes

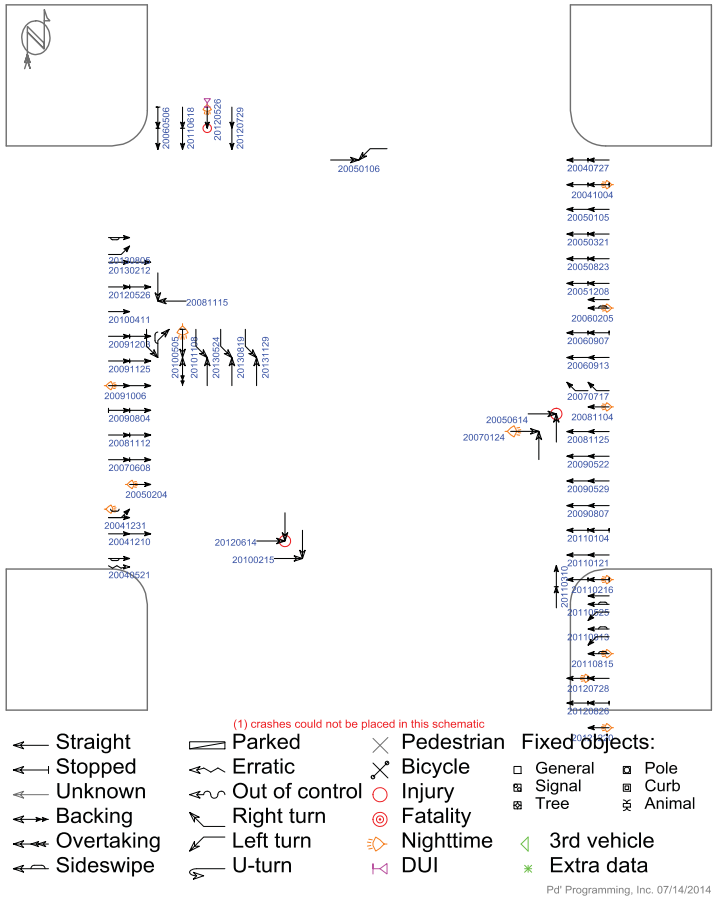

Iowa Department of Transportation

Major Cause Summary

S 32nd St and 5th Ave S

Report Version 1.1 Jan 2005

Analysis Years: 2004 [5], 2005 [7], 2006 [4], 2007 [3], 2008 [4], 2009 [7], 2010 [4], 2011 [8], 2012 [8], 2013 [5]

Crash Summary:

Fatal	-
Major Injury	-
Minor Injury	3
Possible/Unknown	13
PDO	39
Total Crashes	55

Injury Summary:

Fatal	-
Major Injury	-
Minor Injury	6
Possible	17
Unknown	2
Total Injuries	25

TOT Property Damage: $222,850

AVG Property Damage: $4,052

Surface Condition Summary:

Dry	42
Wet	6
Ice	2
Snow	5
Slush	-
Sand/Dirt/Oil/Gravel	-
Water	-
Other	-
Unknown	-
Not Reported	-
Total Crashes	55

Major Cause Summary:

1	Animal		Improper Backing
7	Ran Traffic Signal		Illegally Parked/Unattended
	Ran Stop Sign		Swerving/Evasive Action
1	Crossed Centerline		Over-Correcting/Over-Steering
	FTYROW: At Uncontrolled Intersection		Downhill Runaway
	FTYROW: Making Right Turn on Red Signal		Equipment Failure
1	FTYROW: From Stop Sign		Separation of Units
	FTYROW: From Yield Sign		Ran Off Road - Right
2	FTYROW: Making Left Turn		Ran Off Road - Straight
	FTYROW: From Driveway		Ran Off Road - Left
	FTYROW: From Parked Position	6	Lost Control
	FTYROW: To Pedestrian	2	Inattentive/Distracted By: Passenger
2	FTYROW: Other (explain in narrative)		Inattentive/Distracted By: Use of Phone or Other
	Traveling Wrong Way or on Wrong Side of Rd		Inattentive/Distracted By: Fallen Object
4	Driving Too Fast for Conditions	1	Inattentive/Distracted By: Fatigued/Asleep
	Exceeded Authorized Speed	1	Other: Vision Obstructed
3	Made Improper Turn		Oversized Load/ Oversized Vehicle
	Improper Lane Change		Cargo/Equipment Loss or Shift
10	Followed Too Close	9	Other: Other Improper Action
	Disregarded Railroad Signal	4	Unknown
	Disregarded Warning Sign	1	Other: No Improper Action
	Operating Vehicle in Reckless/Aggressive Manner		None Indicated

Selection Filter:

None

Analyst: OMV

Notes: Radius = 150'

Iowa Department of Transportation

Driver and Time Summary

S 32nd St and 5th Ave S

Report Version 1.0 Aug 2006

Crash Time of Day Summary:

From / To	00:00 01:59	02:00 03:59	04:00 05:59	06:00 07:59	08:00 09:59	10:00 11:59	12:00 13:59	14:00 15:59	16:00 17:59	18:00 19:59	20:00 21:59	22:00 23:59	NR	Total	%
SUN	-	-	-	-	-	-	2	-	-	2	-	-	-	4	7
MON	-	-	-	-	1	-	2	-	2	-	2	-	-	7	13
TUE	1	1	-	2	1	2	-	1	1	2	-	-	-	11	20
WED	-	-	-	-	1	1	2	2	-	2	-	-	-	8	15
THU	-	-	-	-	1	-	1	3	1	-	1	-	-	7	13
FRI	-	-	-	-	-	4	1	1	2	2	1	-	-	11	20
SAT	-	1	-	-	1	1	-	2	1	-	1	-	-	7	13
Tot.	1	2		2	5	8	8	9	7	8	5			55	
%	2	4		4	9	15	15	16	13	15	9				100

Driver Age/Gender Summary:

Age	Male	Female	NR	Drivers	%
<14	-	-	-		
14	-	-	-		
15	1	-	-	1	1
16	-	1	-	1	1
17	1	1	-	2	2
18	3	-	-	3	3
19	3	-	-	3	3
20	1	1	-	2	2
21 to 24	2	5	-	7	6
25 to 29	1	5	-	6	5
30 to 34	6	-	-	6	5
35 to 39	6	6	-	12	11
40 to 44	8	4	-	12	11
45 to 49	5	7	-	12	11
50 to 54	7	6	-	13	12
55 to 59	4	2	-	6	5
60 to 64	4	3	-	7	6
65 to 69	6	2	-	8	7
70 to 74	1	1	-	2	2
75 to 79	1	-	-	1	1
80 to 84	2	-	-	2	2
85 to 89	1	-	-	1	1
90 to 94	-	-	-		
95 plus	-	-	-		
NR	-	-	5	5	4
Drivers	63	44	5	112	
%	56	39	4		100

Drug/Alcohol Summary:

	Total	%
Drug		
Alcohol, Less than Statutory		
Alcohol, Statutory	1	2
Drug/Alcohol, Less than Statutory		
Drug/Alcohol, Statutory		
Refused		
Under Influence of Alc/Drugs/Meds		
None Indicated	54	98
Total Crashes	55	100

Fixed Object Struck Summary:

	Vehs.	%
Bridge/Bridge rail/Overpass		
Underpass/Structure Support		
Culvert		
Ditch/Embankment	1	1
Curb/Island/Raised Median	2	2
Guardrail		
Concrete Barrier		
Tree		
Pole - Utility/Light/Etc	1	1
Sign Post		
Mailbox		
Impact Attenuator		
Other Fixed Object		
None	108	96
Total Vehicles	112	100

Selection Filter:

None

Analyst: OMV

Notes: Radius = 150'

Intersection: 5th Ave S & S 32nd St ID#: 532

Lane Width	**Turn Lanes**
Approaching N/S: 12 ft E/W: 12 ft	Left turn lanes on N/S/E/W approaches No right turn lanes
Sidewalk/ADA Ramps	**Lighting**
8' wide trail exists along S 32nd St along the west side, north of the intersection, and east side, south of the intersection. There are ramps in the NW and SE corners for this trail as well as the NE corner as a waiting location to cross. There are detectable warning panels in each of these corners.	There are combination signal/lighting poles located in three corners of the intersection. The 4th corner (NW) has a vertical extension for lighting, but no luminaire arm exists. Housings indicate 250 watt fixtures.
Parking	**Access/Driveways**
No parking existing along both streets near the intersection.	There are commercial driveways south (140 ft away) and east (200 ft) of the intersection.
Miscellaneous	
1. The south approach to the intersection could be reconstructed to better align with the north approach. The safety audit did not identify N/S crashes being problematic, but better alignment could help with better intersection operations.	

Cost Opinion

Intersection	Item	Period for Modification		
		Short-Term (0-2 Years)	Mid-Term (2-5 Years)	Long-Term (5-15 Years)
5th Ave S & S 32nd St	Reconstruct South Approach to align with North Approach			$60,000
Total				$60,000

CLICK TO RETURN TO SIGNAL LOCATION MAP

5th Ave S & Menards ID#: 533

Intersection: 5th Ave S & Menards Entrance ID#: 533

Signal Evaluation	MUTCD Issues
1. Siemens Eagle M52 signal controller 2. Iteris Vantage Plus video detection 3. Protected/permissive left turn phasing for east approach (has flashing yellow arrow) 4. Does have communication equipment, the controller is connected to the distribution panel, and fiber optic cable is connected and routed west towards S 32nd St, but is not connected to that cabinet 5. Does have battery back-up system	1.
Misc. Comments	
1. Constructed in 2014	

Budget Needs

Intersection	Item	Period for Modification		
		Short-Term (0-2 Years)	Mid-Term (2-5 Years)	Long-Term (5-15 Years)
5th Ave S & Menards Entrance	New in 2014			
	Annual Maintenance	$800	$1,200	$4,000
Total		$800	$1,200	$4,000

Intersection: 5th Ave S & Menards Entrance ID#: 533

Crash Summary	**Trends**
1. Due to crash history at this intersection and along 5th Ave S, east of S 32nd St, 5th Ave S was converted to a 3-lane cross-section in 2014.	1.
Mitigation Options / Potential Improvements	
Funding Potential	
1. Received TSIP funding for the traffic signal and 3-lane conversion in 2013. Construction occurred in 2014.	

Cost Opinion

Intersection	Item	Period for Modification		
		Short-Term (0-2 Years)	Mid-Term (2-5 Years)	Long-Term (5-15 Years)
5th Ave S & Menards Entrance	None			
Total				

Intersection: 5th Ave S & Menards Entrance ID#: 533

Lane Width	**Turn Lanes**
Approaching (no N approach) S: 12 ft E/W: 12 ft	Left turn lanes on S/E approaches No right turn lanes
Sidewalk/ADA Ramps	**Lighting**
None	There is a combination signal/lighting pole located in the SE corner of the intersection. The combination pole at the intersection utilizes the City's decorative lighting arm and fixture.
Parking	**Access/Driveways**
No parking existing along both streets near the intersection.	There are commercial driveways south (140 ft away) and east (200 ft) of the intersection.
Miscellaneous	
1. The intersection has been designed for a potential north approach to be constructed and widening of 5th Ave S to 5 lanes if needed.	

Cost Opinion

Intersection	Item	Period for Modification		
		Short-Term (0-2 Years)	Mid-Term (2-5 Years)	Long-Term (5-15 Years)
5th Ave S & Menards Entrance	None			
Total				

CLICK TO RETURN TO SIGNAL LOCATION MAP

5th Ave S & S 42nd St/P59 ID#: 535

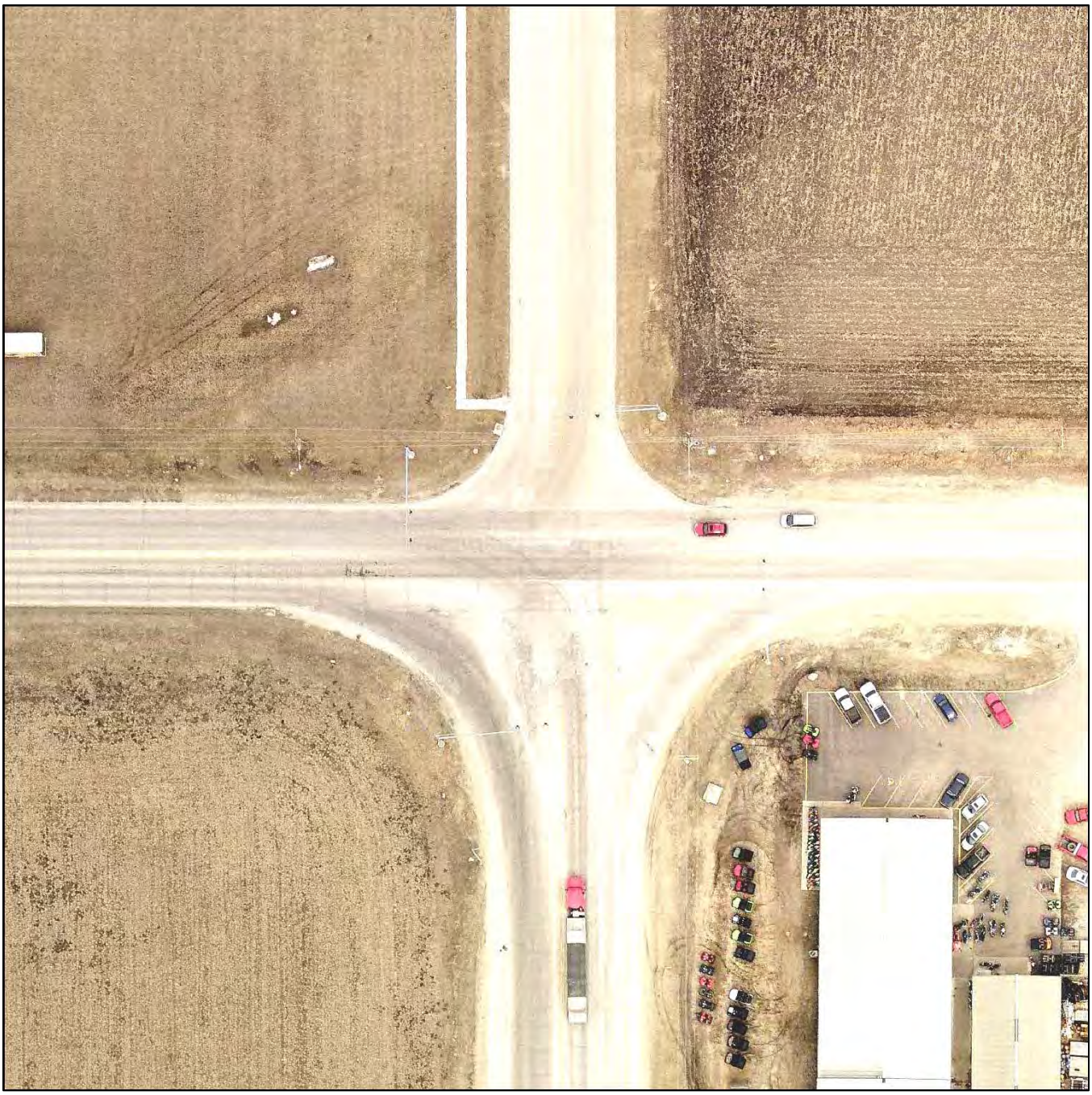

Intersection: 5th Ave S & S 42nd St/Cty Rd P59 ID#: 535

Signal Evaluation	MUTCD Issues
1. Siemens Eagle M42 signal controller 2. Iteris Vantage Plus video detection 3. Protected/permissive left turn phasing for east approach, permissive for remaining approaches 4. Does have communication equipment, however, nothing is connected in the cabinet 5. Does have battery back-up system	1. Have circular indications over left turn lanes. Acceptable per previous MUTCD. Should be changed to flashing yellow arrow (arrow only heads) to comply with 2009 Edition. 2. When replacing street name signs, signs on mast arms shall have 12", upper and lowercase lettering 3. Update clearance (yellow and red) intervals to current standards of practice

Misc. Comments

1. Have large corner radii on the south side of the intersection. There is a Yield sign located in the SE corner for northbound right turning vehicles. The sign is not needed as the movement can be controlled by the traffic signal. Could install a side-of-pole signal head on the NE corner signal pole to aid in visibility for this movement.
2. Signal poles on the south side of the intersection are close to the existing pavement. These could be relocated to improve clear zone.
3. 5th Ave S was converted to 3 lanes in 2014. The existing signal heads do not line up with the center of the approach lanes E/W. To achieve this, signal poles may need to be relocated/replaced.
4. Discussions indicated that S 42nd St could be connected to 1st Ave S. This would increase traffic volumes on the north approach. If/when this occurs, intersection operation should be reviewed for potential implementation of left turn phasing on all approaches.

Budget Needs

Intersection	Item	Period for Modification		
		Short-Term (0-2 Years)	Mid-Term (2-5 Years)	Long-Term (5-15 Years)
5th Ave S & S 42nd St/ Cty Rd P59	Remove Yield Sign, Install additional Signal Head	$1,000		
	Replace Video Detection System	$35,000		
	Relocate Signal Poles for Clear Zone		$20,000	
	Replace signal poles to realign signal heads for new Lane Configuration		$40,000	
	Replace/Upgrade Controller and/or Cabinet			$20,000
	Implement Flashing Yellow Arrows			$30,000
	Annual Maintenance	$800	$1,200	$4,000
Total		$36,800	$61,200	$54,000

SIGNAL EQUIPMENT DATA

INTERSECTION: 5th Ave S & S 42nd St/P59

DATE: 6/26/14

POWER: Underground

ZONE: 5

ADDRESS:

ID: 535

CONTROLLER:
BRAND: Eagle Traffic Control Systems
MODEL: EPAC 3108M42

SOFTWARE VER: OS #3.32M (NOV 03)

DETECTORS:
LOOP: None

VIDEO: Iteris Vantage Plus

PUSHBUTTONS: None

POLE DATA

POLE NO.	POLE TYPE	POLE MATL.	TYPE OF BASE	ARM LENGTH / PEDSTL. HEIGHT		REMARKS
1	1	2	1	36		
2	3	2	2	48		
3	1	2	2	36		
4	3	2	2	48		

POLE TYPE
1. SINGLE MAST ARM
2. TWIN MAST ARM
3. COMBINATION
4. PEDESTAL
5. UTILITY
6. OTHER

POLE MATL.
1. ALUMINUM
2. STEEL
3. WOOD
4. OTHER

TYPE OF BASE
1. PLATE
2. STEEL TRANSFORMER
3. ALUM. TRANSFORMER

AUXILIARY EQUIPMENT

VIDEO: Iteris Vantage Plus
Panasonic Video Monitor

PRE-EMPTION:

CONFLICT MONITOR: EDI MMU-16E

BATTERY BACK-UP: Yes

DETECTOR AMP: Eagle traffic control systems (not in

COMMUNICATION:

SIGNAL TIMING DATA

INTERSECTION: 5th Ave S & S 42nd St/P59
CONTROLLER: Eagle Traffic Control Systems
DATE: 6/26/14 - Existing Timings

Basic Timing Data

	Ph1 -	Ph2 - WB	Ph3 -	Ph4 - NB	Ph5 -WBL	Ph6 - EB	Ph7 -	Ph8 - SB
Min Grn	0	15	0	20	8	15	0	15
Passage	0.0	5.0	0.0	5.0	3.0	5.0	0.0	5.0
Max 1	0	35	0	35	10	35	0	20
Max 2	30	50	30	50	30	50	30	50
Yellow	4.0	5.0	4.0	4.0	4.0	5.0	4.0	4.0
Red Clr	1.0	1.0	1.0	1.0	1.0	1.0	1.0	1.0
Walk	0	7	0	7	0	7	0	7
Ped Clear	0	8	0	8	0	8	0	8
Recall		MIN		MIN		MIN		
Lock/Non		NON		NON		NON		NON
Act/Non-Act		NON		NON		NON		NON

Coordination Plan Data

NOT IN COORDINATION

Dial 1/Split 1 Cycle: Offset:

Phase	1	2	3	4	5	6	7	8
Time								
Mode								

Active Periods:

Dial 2/Split 1 Cycle: Offset:

Phase	1	2	3	4	5	6	7	8
Time								
Mode								

Active Periods:

Dial 3/Split 1 Cycle: Offset:

Phase	1	2	3	4	5	6	7	8
Time								
Mode								

Active Periods:

Phasing

N

INDICATE NORTH

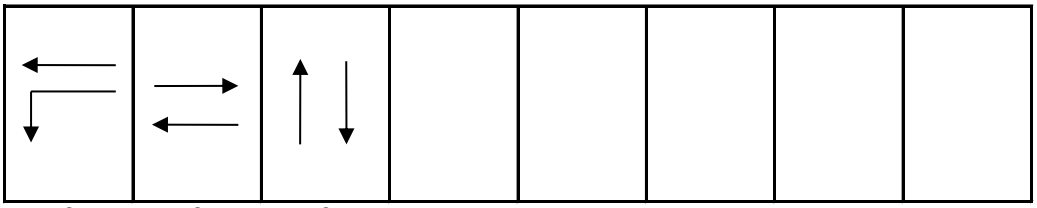

2 & 5 2 & 6 4 & 8

P 59 6/26

535

SIGNAL LAYOUT:

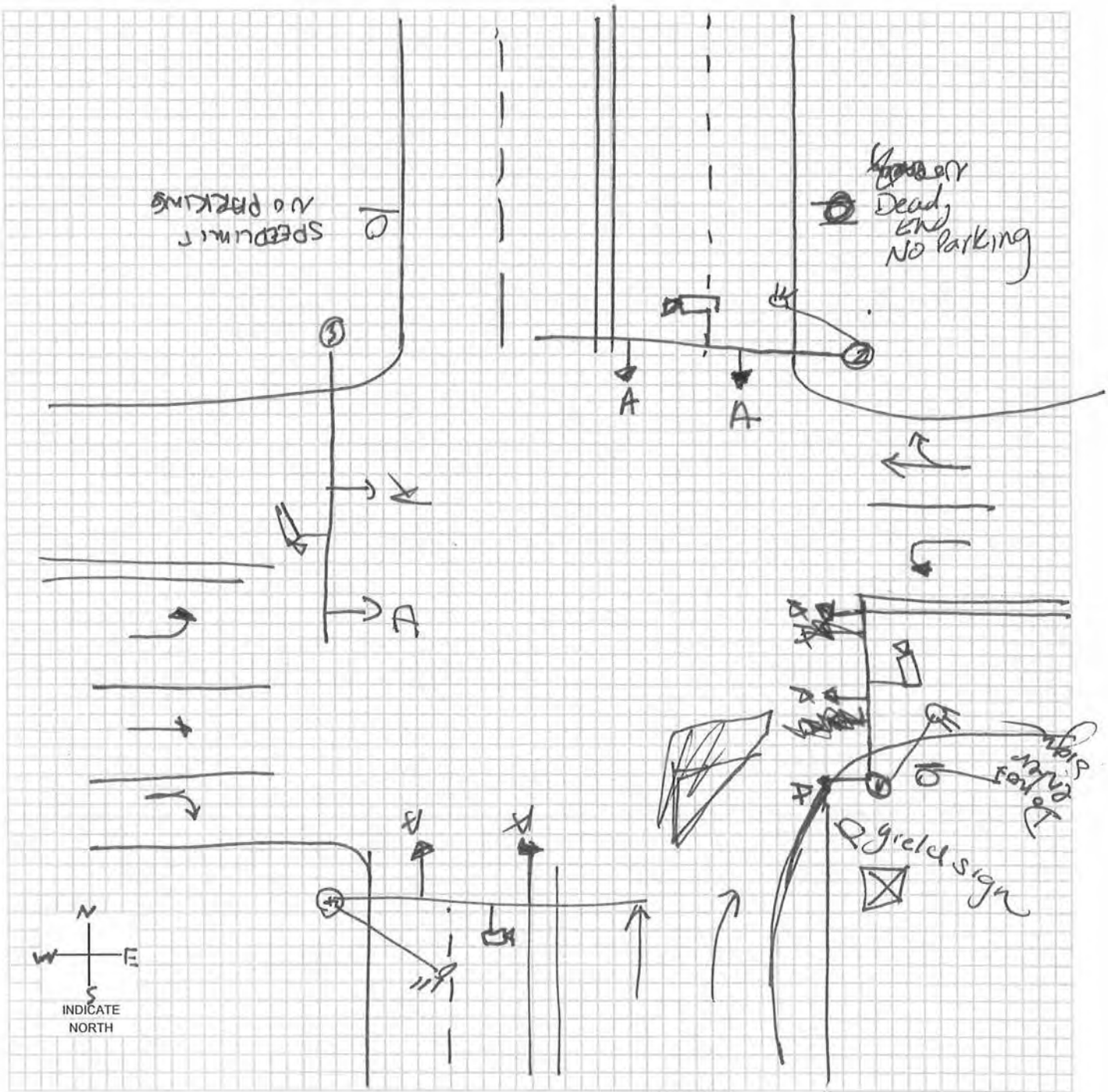

SIGNAL FACES

	A	B	C	D	E	F	G	H	I	J	K	L	M	O
	12 R	12 R	12 R	12 R	12 R	12 R	12 ◄R	12 ◄R	12 R	12 R	DW	W/DW	W DW	
	12 Y	12 ◄Y / 12 Y	12 Y	12 Y	12 Y	12 ◄Y	12 ◄Y	12 ◄Y	12 Y	12 Y	W	CD		
	12 G	12 ◄G / 12 G	12 G	12 G	12 ◄G	12 ◄G	12 ◄G	12 ◄FY	12 G	12 G			N: W CD DW	
			12 ◄G	12 ◄Y				12 ◄G	12 G►	12 Y►				
				12 ◄G						12 G►				

LEGEND

- (7) POLE & NUMBER
- SIGNAL INDICATION
- PEDESTRIAN SIGNAL INDICATION
- PB PUSHBUTTON
- 00-00-PD LOOP DECTETOR
- DISTANCE FROM STOP LINE - AREA OF DETECTION - PRESENCE PR; PULSE P; DELAY D; NO DELAY ND; EXTENSION E
- CONTROLLER
- (M) METER
- VIDEO DET CAMERA

-* OPTICALLY PROGRAMMABLE

Intersection: 5th Ave S & S 42nd St/Cty Rd P59 ID#: 535

Crash Summary	**Trends**
1. Crash rate is at the statewide average (0.68 crashes/MEV). 2. 5 of the 22 crashes were injury crashes. The most severe crashes were possible injury crashes. 3. Followed too close (18%) was reported most frequently as the major cause (5 crashes indicated the surface condition was wet, ice, snow, or slush). 4. No fixed objects were struck 5. 64% of the crashes occurred between 10 AM and 6 PM 6. 31% of the drivers involved in the crashes were under the age of 30.	1. Between 2004 and 2008, the intersection experienced an average of 3 crashes per year. Between 2009 and 2013, it experienced 1.4 crashes per year (7 total crashes) 2. 64% were rear-end crashes 3. Most crashes involve eastbound or northbound traffic

Mitigation Options / Potential Improvements

1. Due to the location, coordination timings are not recommended as traffic will likely arrive randomly from all directions, especially since this intersection is the first encountered when entering Fort Dodge from the east and south.
2. The 2014 conversion of 5th Ave S to 3 lanes will likely impact safety at the intersection.

Funding Potential

1. Not needed at this time

Cost Opinion

Intersection	Item	Period for Modification		
		Short-Term (0-2 Years)	Mid-Term (2-5 Years)	Long-Term (5-15 Years)
5th Ave S & S 42nd St/ Cty Rd P59	None			
Total				

Intersection Crash Summary

Location: 5th Ave S & S 42nd St/P59
City/County: Fort Dodge, Webster County
Time Period: 2004- May 2014 Crash Period = 10.5 years
Prepared by: OMV

NUMBER OF CRASHES

0	Fatal Crashes	0 fatalities	0 injuries
0	Major Injury Crashes		0 injuries
0	Minor Injury Crashes		0 injuries
5	Possible/Unknown Injury Crashes		7 injuries
17	Property Damage Only Crashes		
Totals: 22	Crashes	0 fatalities	7 injuries

CRASH RATES

Total Crash Rate =	22	/	32.23 MEV	=	0.68 Total Crashes/MEV
Fatal Crash Rate =	0	/	32.23 MEV	=	0.00 Fatal Crashes/MEV
Fatal/Injury Crash Rate =	5	/	32.23 MEV	=	0.16 F & I Crashes/MEV

CRASH FREQUENCY

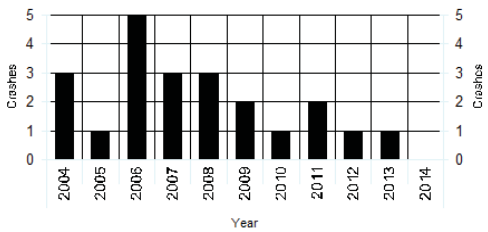

CRASH TYPE

1 Head-on	0 Sideswipe, Same Direction	Non Vehicle Collision Type	
14 Rear-end Crash	0 Sideswipe, Opposite Direction	0 Pedestrian	
2 Broadside/Right angle Crash	0 Parked	0 Bicycle	
2 Angle, Oncoming Left Turn	0 Other	0 Fixed Object	
0 Backing	1 Unknown	2 No Object Reported	

TRAFFIC - AADT

North Approach =	500
South Approach =	4970
East Approach =	3050
West Approach =	8300
Million Entering Vehicles (MEV) =	32.23

Notes:
From 2011

S 42ndSt/P59 and 5th Ave S

2004 - 2014 Reportable Crashes

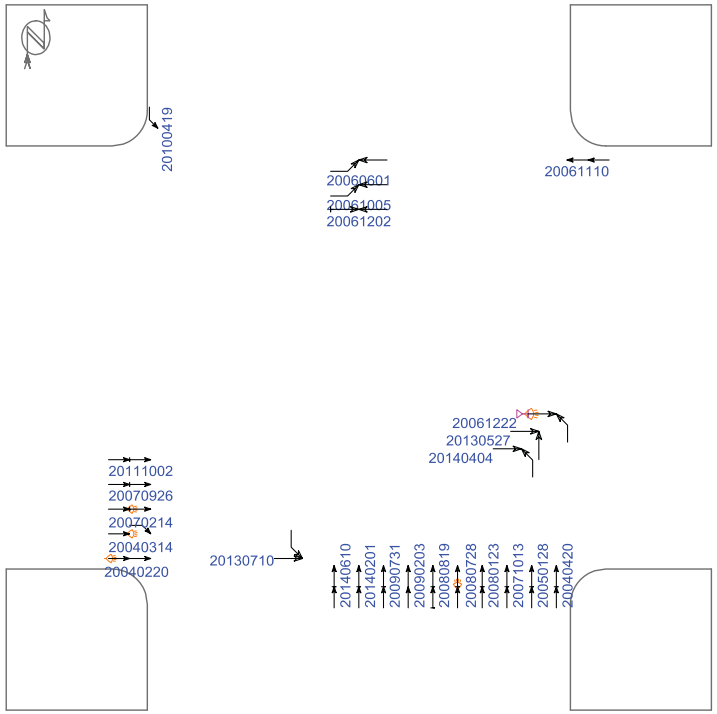

(0) crashes could not be placed in this schematic

Straight
Stopped
Unknown
Backing
Overtaking
Sideswipe
Parked
Erratic
Out of control
Right turn
Left turn
U-turn
Pedestrian
Bicycle
Injury
Fatality
Nighttime
DUI
Fixed objects:
General
Signal
Tree
Pole
Curb
Animal
3rd vehicle
Extra data

Pd' Programming, Inc. 07/14/2014

Iowa Department of Transportation

Major Cause Summary

S 42nd St/P59 and 5th Ave S

Report Version 1.1 Jan 2005

Analysis Years: 2004 [3], 2005 [1], 2006 [5], 2007 [3], 2008 [3], 2009 [2], 2010 [1], 2011 [2], 2012 [1], 2013 [1]

Crash Summary:

Fatal	-
Major Injury	-
Minor Injury	-
Possible/Unknown	5
PDO	17
Total Crashes	22

Injury Summary:

Fatal	-
Major Injury	-
Minor Injury	-
Possible	7
Unknown	-
Total Injuries	7

TOT Property Damage: $109,950

AVG Property Damage: $4,998

Surface Condition Summary:

Dry	16
Wet	2
Ice	-
Snow	2
Slush	1
Sand/Dirt/Oil/Gravel	-
Water	-
Other	-
Unknown	-
Not Reported	1
Total Crashes	22

Major Cause Summary:

2	Animal		Improper Backing
1	Ran Traffic Signal		Illegally Parked/Unattended
	Ran Stop Sign		Swerving/Evasive Action
	Crossed Centerline		Over-Correcting/Over-Steering
	FTYROW: At Uncontrolled Intersection		Downhill Runaway
	FTYROW: Making Right Turn on Red Signal		Equipment Failure
	FTYROW: From Stop Sign		Separation of Units
	FTYROW: From Yield Sign		Ran Off Road - Right
1	FTYROW: Making Left Turn		Ran Off Road - Straight
	FTYROW: From Driveway		Ran Off Road - Left
	FTYROW: From Parked Position	2	Lost Control
	FTYROW: To Pedestrian	1	Inattentive/Distracted By: Passenger
1	FTYROW: Other (explain in narrative)		Inattentive/Distracted By: Use of Phone or Other
	Traveling Wrong Way or on Wrong Side of Rd		Inattentive/Distracted By: Fallen Object
1	Driving Too Fast for Conditions		Inattentive/Distracted By: Fatigued/Asleep
	Exceeded Authorized Speed		Other: Vision Obstructed
	Made Improper Turn		Oversized Load/ Oversized Vehicle
	Improper Lane Change		Cargo/Equipment Loss or Shift
4	Followed Too Close	5	Other: Other Improper Action
	Disregarded Railroad Signal		Unknown
	Disregarded Warning Sign	3	Other: No Improper Action
1	Operating Vehicle in Reckless/Aggressive Manner		None Indicated

Selection Filter:

None

Analyst: OMV

Notes: Radius = 250'

Iowa Department of Transportation

Driver and Time Summary

S 42nd St/P59 and 5th Ave S

Report Version 1.0 Aug 2006

Crash Time of Day Summary:

From / To	00:00 01:59	02:00 03:59	04:00 05:59	06:00 07:59	08:00 09:59	10:00 11:59	12:00 13:59	14:00 15:59	16:00 17:59	18:00 19:59	20:00 21:59	22:00 23:59	NR	Total	%
SUN	-	1	-	-	-	-	-	-	1	-	-	-	-	2	9
MON	-	-	1	-	-	1	-	-	-	-	1	-	-	3	14
TUE	-	-	-	-	1	1	-	-	1	-	-	-	-	3	14
WED	-	-	-	-	1	1	1	-	-	-	-	1	-	4	18
THU	-	-	-	-	-	-	1	-	1	-	-	-	-	2	9
FRI	-	-	1	-	-	-	-	2	2	1	-	-	-	6	27
SAT	-	-	-	-	-	1	1	-	-	-	-	-	-	2	9
Tot.		1	2		2	4	3	2	5	1	1	1		22	
%		5	9		9	18	14	9	23	5	5	5			100

Driver Age/Gender Summary:

Age	Male	Female	NR	Drivers	%
<14	-	-	-		
14	-	1	-	1	2
15	-	-	-		
16	1	-	-	1	2
17	-	-	-		
18	-	-	-		
19	2	-	-	2	5
20	1	-	-	1	2
21 to 24	2	2	-	4	10
25 to 29	3	1	-	4	10
30 to 34	4	1	-	5	12
35 to 39	4	1	-	5	12
40 to 44	-	-	-		
45 to 49	4	2	-	6	14
50 to 54	1	3	-	4	10
55 to 59	3	1	-	4	10
60 to 64	1	-	-	1	2
65 to 69	-	-	-		
70 to 74	1	-	-	1	2
75 to 79	1	-	-	1	2
80 to 84	-	1	-	1	2
85 to 89	-	1	-	1	2
90 to 94	-	-	-		
95 plus	-	-	-		
NR	-	-	-		
Drivers	28	14	0	42	
%	67	33	0		100

Drug/Alcohol Summary:

	Total	%
Drug		
Alcohol, Less than Statutory	1	5
Alcohol, Statutory		
Drug/Alcohol, Less than Statutory		
Drug/Alcohol, Statutory		
Refused		
Under Influence of Alc/Drugs/Meds		
None Indicated	21	95
Total Crashes	22	100

Fixed Object Struck Summary:

	Vehs.	%
Bridge/Bridge rail/Overpass		
Underpass/Structure Support		
Culvert		
Ditch/Embankment		
Curb/Island/Raised Median		
Guardrail		
Concrete Barrier		
Tree		
Pole - Utility/Light/Etc		
Sign Post		
Mailbox		
Impact Attenuator		
Other Fixed Object		
None	42	100
Total Vehicles	42	100

Selection Filter:

None

Analyst: OMV

Notes: Radius = 250'

Intersection: 5th Ave S & S 42nd St/Cty Rd P59 ID#: 535

Lane Width	**Turn Lanes**
Approaching N/S: 12 ft E/W: 12 ft	Left turn lanes on E/N/W approaches Right turn lanes on S/W approaches
Sidewalk/ADA Ramps	**Lighting**
A 4' wide sidewalk exists along S 42nd St along the west side, north of the intersection. It ends with a ramp and detectable warning panel into S 42nd St 50 ft north of the intersection.	There are combination signal/lighting poles located in three corners of the intersection. The 4th corner (NW) has a utility pole 50 ft west with a fixture for lighting. There is an additional lighting pole located 50 ft south of the signal pole in the SW corner. Housings indicate 250 watt fixtures.
Parking	**Access/Driveways**
No parking existing along both streets near the intersection.	There is only one commercial driveway located on the south side of 5th Ave S, east of the intersection located 190 ft away.
Miscellaneous	
1. Pavement markings along S 42nd St indicate it is a 4-lane street/road. It is possible to convert to a 3-lane street/road, but there are not many streets or driveways along it. It is advisable to align left turn lanes along S 42nd St at the 5th Ave S intersection. If/when S 42nd St is connected to 1st Ave S there will be a greater traffic volume on the north approach creating a potential sight distance problem with current layout for left turning traffic N/S.	

Cost Opinion

Intersection	Item	Period for Modification		
		Short-Term (0-2 Years)	Mid-Term (2-5 Years)	Long-Term (5-15 Years)
5th Ave S & S 42nd St/ Cty Rd P59	Revise Pavement Markings N/S for 3 lanes		$10,000	
Total			$10,000	

Hawkeye Ave & 2nd St NW ID#: 901

Crossing: Hawkeye Ave & 2nd St NW ID#: 901

Crossing Evaluation	MUTCD Issues
1. Cross Alert System 2. Microwave ped/bike detection 3. Flashing yellow beacon for vehicles, red for ped/bike with stop sign 4. Has wireless communication between poles 5. Solar powered	1. Stop signs for the trail users should be at least 4 ft above the trail surface 2. Make sure the flashing occurs for at least 17 seconds (correlates to 7 sec of walk and 10 sec of pedestrian clearance) 3. Make sure the trail stops signs are at least 18" x 18"
Misc. Comments	
1. Convert flashing beacons for vehicular traffic to rapid rectangular flashing beacons (RRFB) as studies have shown RRFB more effective than flashing beacons.	

Budget Needs

Intersection	Item	Period for Modification		
		Short-Term (0-2 Years)	Mid-Term (2-5 Years)	Long-Term (5-15 Years)
Hawkeye Ave & 2nd St NW	Relocate Stop Signs to 4' above trail pavement	$100		
	Adjust Flashing period to be per Ped Clearance Requirements (MUTCD)	$100		
	Replace Stop Signs with 18" x 18" signs (MUTCD)	$400		
	Convert to Rapid Rectangular Flashing Beacon		$15,000	
	Annual Maintenance	$400	$600	$2,000
Total		$1,000	$15,600	$2,000

SIGNAL EQUIPMENT DATA

INTERSECTION: Hawkeye Ave & 2nd St NW

DATE: 6/25/14

POWER: Solar

ZONE: 9

ADDRESS:

ID: 901

CONTROLLER:

BRAND:

MODEL:

SOFTWARE VER:

DETECTORS:

LOOP:

VIDEO:

PUSHBUTTONS:

POLE DATA

POLE NO.	POLE TYPE	POLE MATL.	TYPE OF BASE	ARM LENGTH / PEDSTL. HEIGHT		REMARKS
1	4	1	2	10		Flashers on pole
2	4	1	2	10		Flashers on pole

POLE TYPE
1. SINGLE MAST ARM
2. TWIN MAST ARM
3. COMBINATION
4. PEDESTAL
5. UTILITY
6. OTHER

POLE MATL.
1. ALUMINUM
2. STEEL
3. WOOD
4. OTHER

TYPE OF BASE
1. PLATE
2. STEEL TRANSFORMER
3. ALUM. TRANSFORMER

AUXILIARY EQUIPMENT

Cross Alert Systems Inc

McCain Traffic Supply Flashers

Model Number: DC-10

240670

Solar panel on each pole

SIGNAL TIMING DATA

INTERSECTION:
CONTROLLER:
DATE:

Basic Timing Data

	Ph1 -	Ph2 -	Ph3 -	Ph4 -	Ph5 -	Ph6 -	Ph7 -	Ph8 -
Min Grn								
Passage								
Max 1								
Max 2								
Yellow								
Red Clr								
Walk								
Ped Clear								
Recall								
Lock/Non								
Act/Non-Act								

Coordination Plan Data

Dial 1/Split 1 Cycle: Offset:

Phase	1	2	3	4	5	6	7	8
Time								
Mode								

Active Periods:

Dial 2/Split 1 Cycle: Offset:

Phase	1	2	3	4	5	6	7	8
Time								
Mode								

Active Periods:

Dial 3/Split 1 Cycle: Offset:

Phase	1	2	3	4	5	6	7	8
Time								
Mode								

Active Periods:

Phasing

INDICATE NORTH

City of Fort Dodge

Hawkeye Ave + 2nd St NW

SIGNAL LAYOUT:

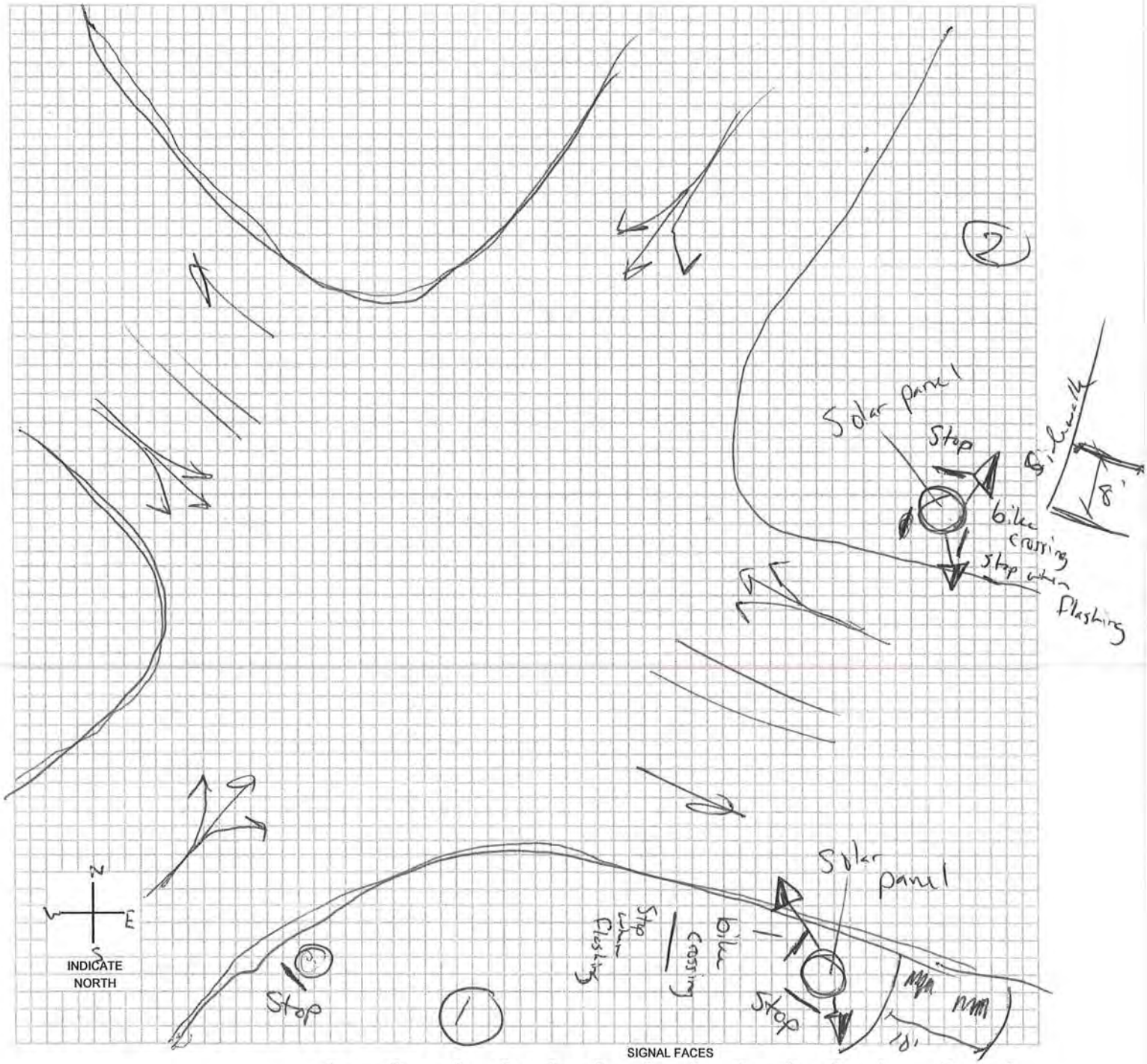

SIGNAL FACES

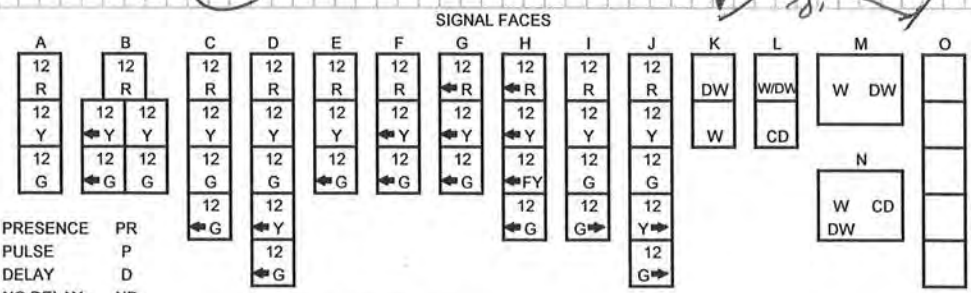

LEGEND

- POLE & NUMBER
- SIGNAL INDICATION
- PEDESTRIAN SIGNAL INDICATION
- PB PUSHBUTTON
- 00-00-PD LOOP DECTETOR
- DISTANCE FROM STOP LINE - AREA OF DETECTION - PRESENCE PR; PULSE P; DELAY D; NO DELAY ND; EXTENSION E
- CONTROLLER
- METER
- VIDEO DET CAMERA

-* OPTICALLY PROGRAMMABLE

Flasher light

Intersection: Hawkeye Ave & 2nd St NW ID#: 901

Crash Summary	**Trends**
1. Crash rate is 0.21 crashes/MEV 2. One of the 9 crashes was an injury crash. The injury crash was a minor injury crash. 3. No crash involved a pedestrian or bicyclist 4. One vehicle was reported as striking a fixed object: curb/island/raised median (1)	1. Only one crash occurred since 2010 (in 2012) 2. 44% were rear-end crashes
Mitigation Options / Potential Improvements	
1. No significant safety concern at intersection. Continue to monitor if safety concern arises.	
Funding Potential	
1. Not needed at this time	

Cost Opinion

Intersection	Item	Period for Modification		
		Short-Term (0-2 Years)	Mid-Term (2-5 Years)	Long-Term (5-15 Years)
Hawkeye Ave & 2nd St NW	None			
Total				

Intersection Crash Summary

Location: Hawkeye Ave & 2nd St NW
City/County: Fort Dodge, Webster County
Time Period: 2004- May 2014 Crash Period = 10.5 years
Prepared by: OMV

NUMBER OF CRASHES

0	Fatal Crashes	0 fatalities	0 injuries
0	Major Injury Crashes		0 injuries
1	Minor Injury Crashes		1 injuries
0	Possible/Unknown Injury Crashes		3 injuries
8	Property Damage Only Crashes		
Totals: 9	Crashes	0 fatalities	4 injuries

CRASH RATES

Total Crash Rate =	9	/	42.16 MEV	=	0.21 Total Crashes/MEV
Fatal Crash Rate =	0	/	42.16 MEV	=	0.00 Fatal Crashes/MEV
Fatal/Injury Crash Rate =	1	/	42.16 MEV	=	0.02 F & I Crashes/MEV

CRASH FREQUENCY

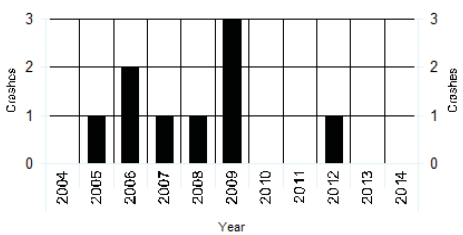

CRASH TYPE

0 Head-on	0 Sideswipe, Same Direction	Non Vehicle Collision Type
4 Rear-end Crash	0 Sideswipe, Opposite Direction	0 Pedestrian
2 Broadside/Right angle Crash	0 Parked	0 Bicycle
2 Angle, Oncoming Left Turn	0 Other	1 Fixed Object
0 Backing	0 Unknown	

TRAFFIC - AADT

North Approach =	2000
South Approach =	2400
East Approach =	9800
West Approach =	7800
Million Entering Vehicles (MEV) =	42.16

Notes:
Estimated

Hawkeye Ave and 2nd St NW

2004 - 2014 Reportable Crashes

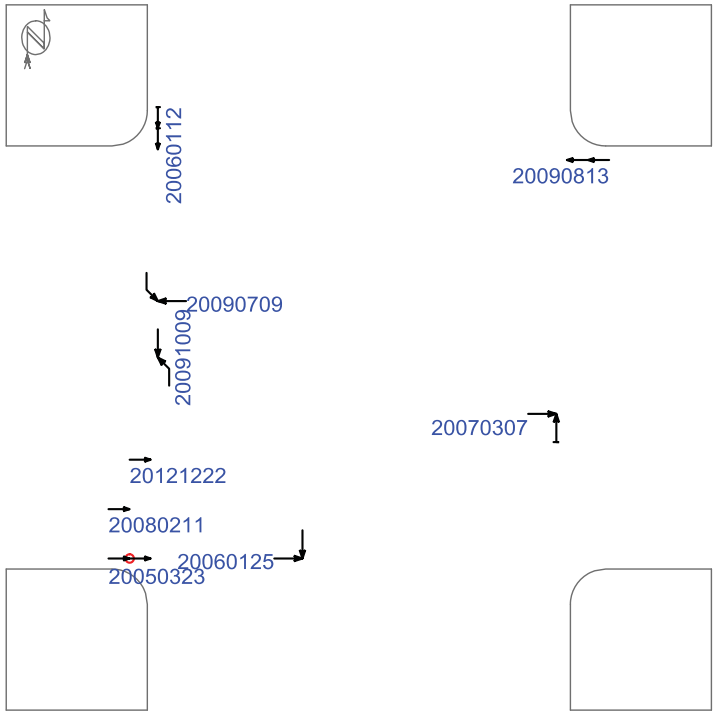

(0) crashes could not be placed in this schematic

Straight, Stopped, Unknown, Backing, Overtaking, Sideswipe, Parked, Erratic, Out of control, Right turn, Left turn, U-turn, Pedestrian, Bicycle, Injury, Fatality, Nighttime, DUI

Fixed objects: General, Signal, Tree, Pole, Curb, Animal

3rd vehicle, Extra data

Pd' Programming, Inc. 07/14/2014

Iowa Department of Transportation

Major Cause Summary

Hawkeye Ave and 2nd St NW

Report Version 1.1 Jan 2005

Analysis Years: 2005 [1], 2006 [2], 2007 [1], 2008 [1], 2009 [3], 2012 [1]

Crash Summary:

Fatal	-
Major Injury	-
Minor Injury	1
Possible/Unknown	-
PDO	8
Total Crashes	9

Injury Summary:

Fatal	-
Major Injury	-
Minor Injury	1
Possible	3
Unknown	-
Total Injuries	4

TOT Property Damage: $39,895

AVG Property Damage: $4,433

Surface Condition Summary:

Dry	5
Wet	2
Ice	-
Snow	2
Slush	-
Sand/Dirt/Oil/Gravel	-
Water	-
Other	-
Unknown	-
Not Reported	-
Total Crashes	9

Major Cause Summary:

	Animal		Improper Backing
	Ran Traffic Signal		Illegally Parked/Unattended
	Ran Stop Sign	1	Swerving/Evasive Action
	Crossed Centerline		Over-Correcting/Over-Steering
	FTYROW: At Uncontrolled Intersection		Downhill Runaway
	FTYROW: Making Right Turn on Red Signal		Equipment Failure
2	FTYROW: From Stop Sign		Separation of Units
	FTYROW: From Yield Sign		Ran Off Road - Right
1	FTYROW: Making Left Turn	1	Ran Off Road - Straight
	FTYROW: From Driveway		Ran Off Road - Left
	FTYROW: From Parked Position		Lost Control
	FTYROW: To Pedestrian		Inattentive/Distracted By: Passenger
	FTYROW: Other (explain in narrative)		Inattentive/Distracted By: Use of Phone or Other
	Traveling Wrong Way or on Wrong Side of Rd		Inattentive/Distracted By: Fallen Object
	Driving Too Fast for Conditions		Inattentive/Distracted By: Fatigued/Asleep
	Exceeded Authorized Speed		Other: Vision Obstructed
	Made Improper Turn		Oversized Load/ Oversized Vehicle
	Improper Lane Change		Cargo/Equipment Loss or Shift
2	Followed Too Close	1	Other: Other Improper Action
	Disregarded Railroad Signal	1	Unknown
	Disregarded Warning Sign		Other: No Improper Action
	Operating Vehicle in Reckless/Aggressive Manner		None Indicated

Selection Filter:

None

Analyst: OMV

Notes: Radius=100'

Iowa Department of Transportation

Driver and Time Summary

Hawkeye Ave and 2nd St NW

Report Version 1.0 Aug 2006

Crash Time of Day Summary:

From / To	00:00 01:59	02:00 03:59	04:00 05:59	06:00 07:59	08:00 09:59	10:00 11:59	12:00 13:59	14:00 15:59	16:00 17:59	18:00 19:59	20:00 21:59	22:00 23:59	NR	Total	%
SUN	-	-	-	-	-	-	-	-	-	-	-	-	-		
MON	-	-	-	-	-	-	1	-	-	-	-	-	-	1	11
TUE	-	-	-	-	-	-	-	-	-	-	-	-	-		
WED	-	-	-	-	-	-	3	-	-	-	-	-	-	3	33
THU	-	-	-	-	-	-	-	1	-	2	-	-	-	3	33
FRI	-	-	-	-	-	-	1	-	-	-	-	-	-	1	11
SAT	-	-	-	-	1	-	-	-	-	-	-	-	-	1	11
Tot.					1		5	1		2				9	
%					11		56	11		22					100

Driver Age/Gender Summary:

Age	Male	Female	NR	Drivers	%
<14	-	-	-		
14	-	-	-		
15	-	-	-		
16	-	-	-		
17	-	-	-		
18	-	1	-	1	6
19	-	-	-		
20	-	-	-		
21 to 24	1	1	-	2	12
25 to 29	-	2	-	2	12
30 to 34	-	-	-		
35 to 39	-	1	-	1	6
40 to 44	-	1	-	1	6
45 to 49	-	2	-	2	12
50 to 54	3	1	-	4	24
55 to 59	2	-	-	2	12
60 to 64	1	-	-	1	6
65 to 69	-	-	-		
70 to 74	-	-	-		
75 to 79	-	-	-		
80 to 84	-	-	-		
85 to 89	-	-	-		
90 to 94	-	-	-		
95 plus	-	-	-		
NR	-	-	1	1	6
Drivers	7	9	1	17	
%	41	53	6		100

Drug/Alcohol Summary:

	Total	%
Drug		
Alcohol, Less than Statutory		
Alcohol, Statutory		
Drug/Alcohol, Less than Statutory		
Drug/Alcohol, Statutory		
Refused		
Under Influence of Alc/Drugs/Meds		
None Indicated	9	100
Total Crashes	9	100

Fixed Object Struck Summary:

	Vehs.	%
Bridge/Bridge rail/Overpass		
Underpass/Structure Support		
Culvert		
Ditch/Embankment		
Curb/Island/Raised Median	1	6
Guardrail		
Concrete Barrier		
Tree		
Pole - Utility/Light/Etc		
Sign Post		
Mailbox		
Impact Attenuator		
Other Fixed Object		
None	16	94
Total Vehicles	17	100

Selection Filter:

None

Analyst: OMV

Notes: Radius=100'

Crossing: Hawkeye Ave & 2nd St NW ID#: 901

Lane Width	**Turn Lanes**
Approaching N/S: 15 ft	None at crossing
Sidewalk/ADA Ramps	**Lighting**
10 ft trail crosses from the west over Hawkeye Ave 80 ft south of 2nd St NW. 8 ft trail continues south along Hawkeye Ave over the Des Moines River. Ramps on both sides of Hawkeye Ave have detectable warning panels.	There is street lighting on both sides of the crossing, however, the nearest light pole is located on the bridge 85 ft south of the crossing.
Parking	**Access/Driveways**
No parking exists near the crossing.	The only access to Hawkeye Ave near the crossing is the 2nd St NW intersection.
Miscellaneous	
1. Due to the distance to the nearest street light, could consider installing an additional light at the crossing to increase visibility of pedestrians/bicyclists at night	

Cost Opinion

Intersection	Item	Period for Modification		
		Short-Term	Mid-Term	Long-Term
		(0-2 Years)	(2-5 Years)	(5-15 Years)
Hawkeye Ave & 2nd St NW	None			
Total				

11th/12th Ave N & N 32nd St ID#: 902

Crossing: N 32nd St - 11th/12th Ave N ID#: 902

Crossing Evaluation	**MUTCD Issues**
1. Eltec Corp System 2. Pushbutton ped/bike detection 3. Rapid rectangular flashing beacons (RRFB) for vehicles, no indication for ped/bike 4. Has wireless communication between poles 5. Solar powered	1. Make sure the flashing occurs for at least 16 seconds (correlates to 7 sec of walk and 9 sec of pedestrian clearance) 2. Replace existing pushbutton signs with MUTCD compliant signs (R10-25, 9” x 12”)
Misc. Comments	
1. Consider replacing existing pushbutton sign assembly with standard traffic signal pushbuttons with signs mounted to the pole. This would be allow for easier maintenance.	

Budget Needs

Intersection	Item	Period for Modification		
		Short-Term (0-2 Years)	Mid-Term (2-5 Years)	Long-Term (5-15 Years)
N 32nd St - 11th/12th Ave N	Replace Pushbutton Signs with standard size	$100		
	Adjust Flashing period to be per Ped Clearance Requirements (MUTCD)	$100		
	Replace Pushbutton with vandal resistant Pushbutton (traffic signal)	$500		
	Annual Maintenance	$400	$600	$2,000
Total		$1,100	$600	$2,000

SIGNAL EQUIPMENT DATA

INTERSECTION: 11th/12th Ave N & N 32nd St

DATE: 6/26/14

POWER: Solar

ZONE: 9

ID: 902

CONTROLLER:
BRAND:
MODEL:

SOFTWARE VER:

DETECTORS:
LOOP: None

VIDEO: None

PUSHBUTTONS: Yes

POLE DATA

POLE NO.	POLE TYPE	POLE MATL.	TYPE OF BASE	ARM LENGTH / PEDSTL. HEIGHT		REMARKS
1	4	2	2	20		Both have separate ELTEC boxes on them, flashing lights, solar power, arrow sign and ped crossing sign on both. Both also have push button that turns the flashing lights on. The flashing lights flash for around 6 seconds.
2	4	2	2	20		

POLE TYPE
1. SINGLE MAST ARM
2. TWIN MAST ARM
3. COMBINATION
4. PEDESTAL
5. UTILITY
6. OTHER

POLE MATL.
1. ALUMINUM
2. STEEL
3. WOOD
4. OTHER

TYPE OF BASE
1. PLATE
2. STEEL TRANSFORMER
3. ALUM. TRANSFORMER

AUXILIARY EQUIPMENT

VIDEO

PRE-EMPTION

CONFLICT MONITOR

BATTERY BACK-UP

DETECTOR AMP

COMMUNICATION

SIGNAL TIMING DATA

INTERSECTION: 11th/12th Ave N & N 32nd St

CONTROLLER:

DATE: 6/26/14

Basic Timing Data

	Ph1 -	Ph2 -	Ph3 -	Ph4 -	Ph5 -	Ph6 -	Ph7 -	Ph8 -
Min Grn								
Passage								
Max 1								
Max 2								
Yellow								
Red Clr								
Walk								
Ped Clear								
Recall								
Lock/Non								
Act/Non-Act								

Coordination Plan Data

Dial 1/Split 1 Cycle: Offset:

Phase	1	2	3	4	5	6	7	8
Time								
Mode								

Active Periods:

Dial 2/Split 1 Cycle: Offset:

Phase	1	2	3	4	5	6	7	8
Time								
Mode								

Active Periods:

Dial 3/Split 1 Cycle: Offset:

Phase	1	2	3	4	5	6	7	8
Time								
Mode								

Active Periods:

Phasing

INDICATE NORTH

City of Fort Dodge

902

SIGNAL LAYOUT: N 32nd St & 11th/12st N

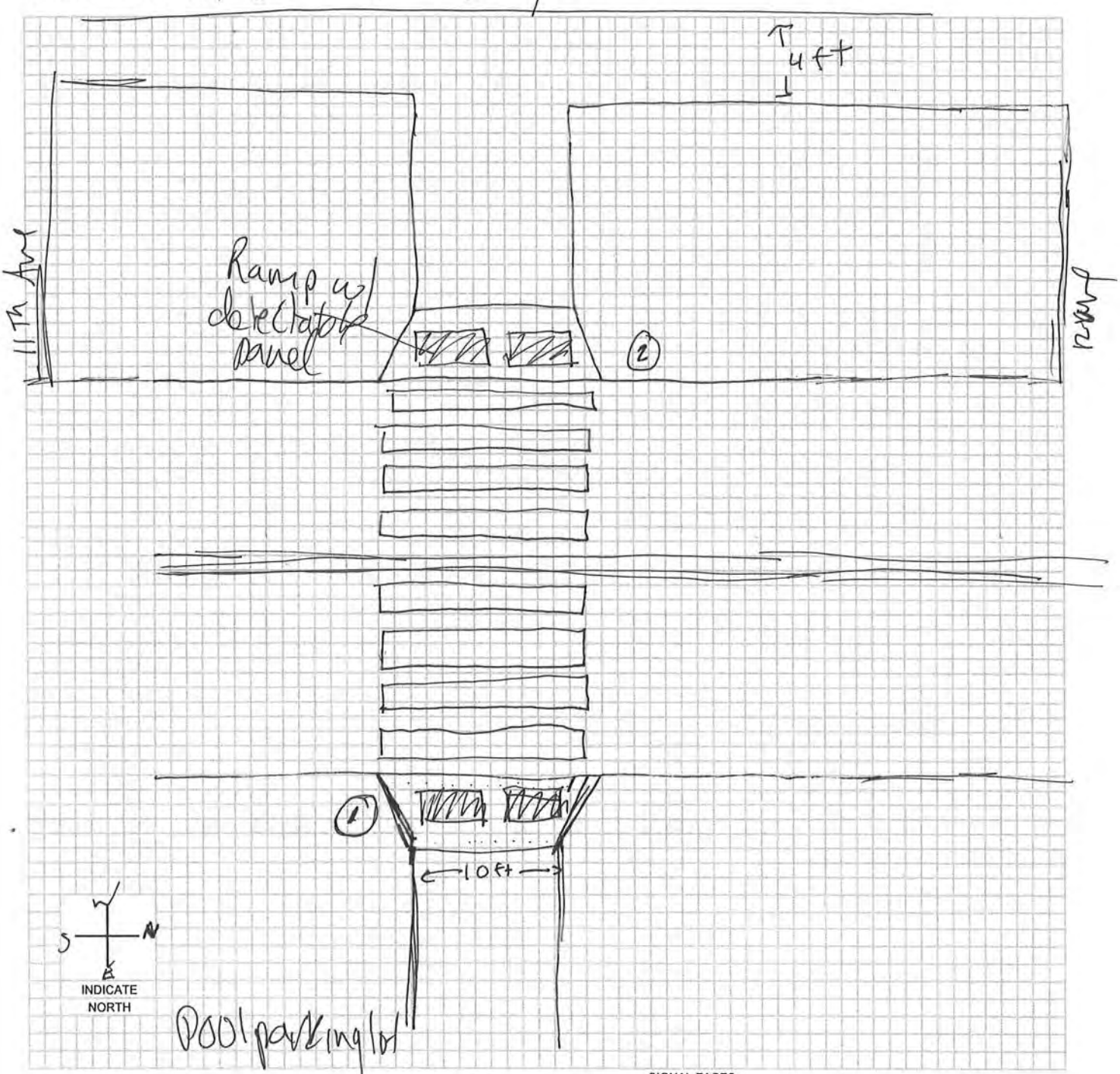

SIGNAL FACES

A	B	C	D	E	F	G	H	I	J	K	L	M	O
12 R	12 R	12 R	12 R	12 R	12 R	12 ◄R	12 ◄R	12 R	12 R	DW	W/DW	W DW	
12 Y	12 ◄Y	12 Y	12 Y	12 Y	12 ◄Y	12 ◄Y	12 ◄Y	12 Y	12 Y	W	CD		
12 G	12 ◄G	12 G	12 G	12 ◄G	12 ◄G	12 ◄G	12 ◄FY	12 G	12 G			N: W CD DW	
		12 ◄G	12 ◄Y				12 ◄G	12 G►	12 Y►				
			12 ◄G						12 G►				

LEGEND

- (7) POLE & NUMBER
- SIGNAL INDICATION
- PEDESTRIAN SIGNAL INDICATION
- PB PUSHBUTTON
- 00-00-PD LOOP DECTETOR
  - DISTANCE FROM STOP LINE - AREA OF DETECTION - PRESENCE PR; PULSE P; DELAY D; NO DELAY ND; EXTENSION E
- CONTROLLER
- (M) METER
- VIDEO DET CAMERA

-* OPTICALLY PROGRAMMABLE

Crossing: N 32nd St - 11th/12th Ave N ID#: 902

Crash Summary	**Trends**
1. No crashes occurred near crossing	1.
Mitigation Options / Potential Improvements	
1. No significant safety concern at intersection. Continue to monitor if safety concern arises.	
Funding Potential	
1. Not needed at this time	

Cost Opinion

Intersection	Item	Period for Modification		
		Short-Term (0-2 Years)	Mid-Term (2-5 Years)	Long-Term (5-15 Years)
N 32nd St - 11th/12th Ave N	None			
Total				

Intersection Crash Summary

Location: N 32nd St and 11th/12th Ave N
City/County: Fort Dodge, Webster County
Time Period: 2004- May 2014 Crash Period = 10.5 years
Prepared by: OMV

NUMBER OF CRASHES

0	Fatal Crashes	0 fatalities	0	injuries
0	Major Injury Crashes		0	injuries
0	Minor Injury Crashes		0	injuries
0	Possible/Unknown Injury Crashes		0	injuries
0	Property Damage Only Crashes			
Totals: 0	Crashes	0 fatalities	0	injuries

CRASH RATES

Total Crash Rate =	0	/	0.00	MEV	=	#DIV/0! Total Crashes/MEV
Fatal Crash Rate =	0	/	0.00	MEV	=	#DIV/0! Fatal Crashes/MEV
Fatal/Injury Crash Rate =	0	/	0.00	MEV	=	#DIV/0! F & I Crashes/MEV

CRASH FREQUENCY *insert histogram from CMAT here*

NO CRASHES

CRASH TYPE

0 Head-on	0 Sideswipe, Same Direction	Non Vehicle Collision Type
0 Rear-end Crash	0 Sideswipe, Opposite Direction	0 Pedestrian
0 Broadside/Right angle Crash	0 Parked	0 Bicycle
0 Angle, Oncoming Left Turn	0 Other	0 Fixed Object
0 Backing	0 Unknown	

TRAFFIC - AADT

North Approach =	0
South Approach =	0
East Approach =	0
West Approach =	0
Million Entering Vehicles (MEV) =	0.00

Notes:
xxxxxxx

Crossing: N 32nd St - 11th/12th Ave N ID#: 902

Lane Width	**Turn Lanes**
Approaching N/S: 15 ft	None at crossing
Sidewalk/ADA Ramps	**Lighting**
There are sidewalks/trails that exist along both sides of N 32nd St and are connected by a 10 ft wide crossing. There are ramps and detectable warnings on both sides of the crossing.	The nearest street light is located 100 ft north of the crossing
Parking	**Access/Driveways**
Parking is not allowed near the crossing	The nearest accesses are public street intersections located north and south of the crossing
Miscellaneous	
1. Due to the distance to the nearest street light, could consider installing an additional light at the crossing to increase visibility of pedestrians/bicyclists at night	

Cost Opinion

Intersection	Item	Period for Modification		
		Short-Term (0-2 Years)	Mid-Term (2-5 Years)	Long-Term (5-15 Years)
N 32nd St - 11th/12th Ave N	Install Street Light		$10,000	
Total			$10,000	

11th/12th Ave S & S 22nd St ID#: 903

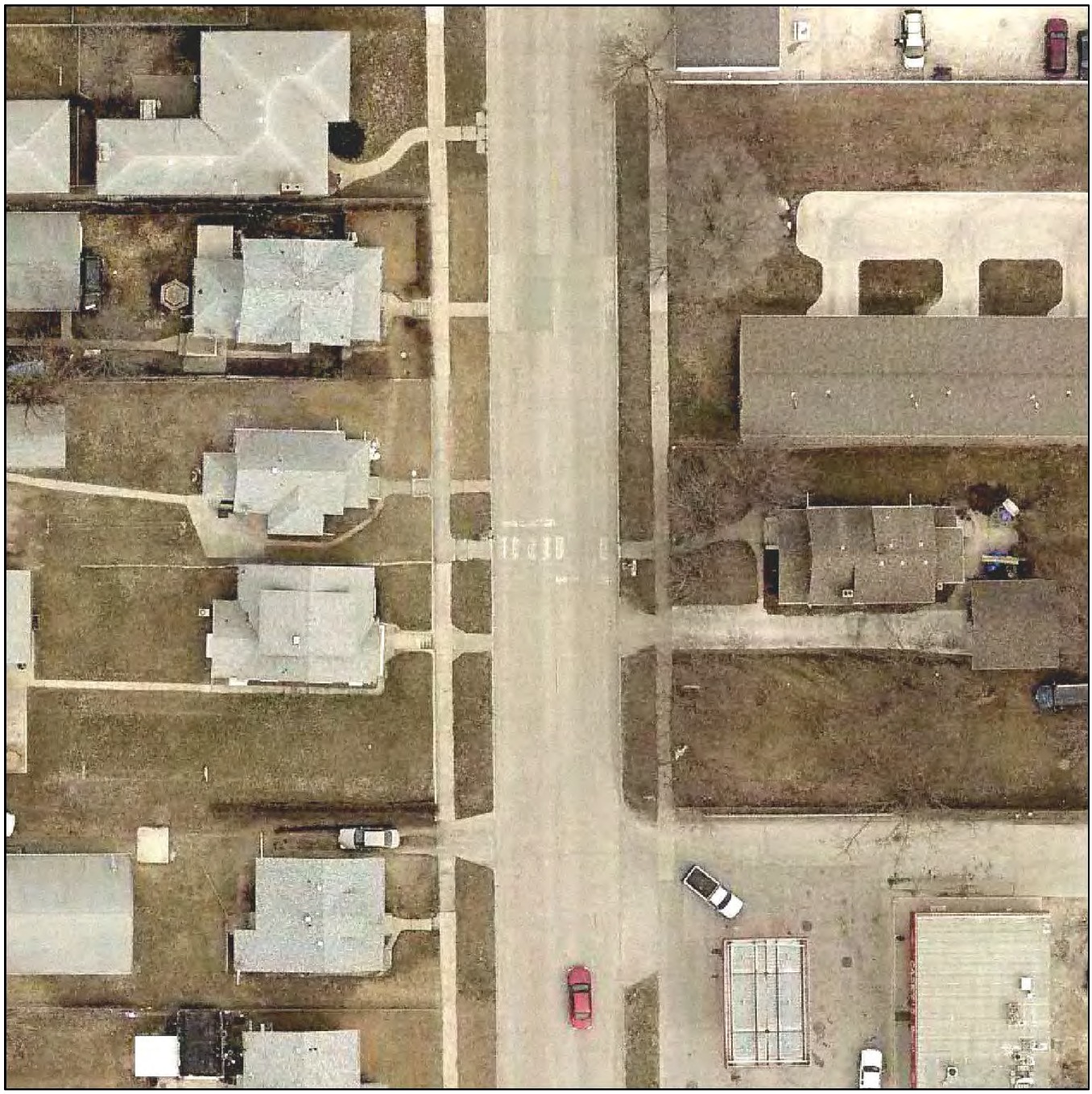

Crossing: S 22nd St - 11th/12th Ave S ID#: 903

Crossing Evaluation	MUTCD Issues
1. Peek 3000 Series signal controller 2. Pushbutton ped detection 3. Traffic signal with pedestal poles on both sides for vehicular indications	1. Update clearance intervals (yellow and red) to current standards of practice 2. Install pushbutton signs
Misc. Comments	
1. The age of signal equipment, including poles and signal heads indicate, if the crossing remains in place, the crossing should be reconstructed. 2. However, due to the crossing location and lack of proximity to any schools, daycares, or parks, this crossing could be removed.	

Budget Needs

Intersection	Item	Period for Modification		
		Short-Term (0-2 Years)	Mid-Term (2-5 Years)	Long-Term (5-15 Years)
S 22nd St - 11th / 12th Ave S	Remove Traffic Signal	$5,000		
Total		$5,000	$0	$0

SIGNAL EQUIPMENT DATA

INTERSECTION: 11th/12th Ave S & S 22nd St

DATE: 7/8/14

POWER: Overhead

ZONE: 9

ADDRESS:

ID: 903

CONTROLLER:
BRAND: Peek Traffic
MODEL: 3000 Series Controller

SOFTWARE VER:

DETECTORS:
LOOP: None

VIDEO: None

PUSHBUTTONS: Yes

POLE DATA

POLE NO.	POLE TYPE	POLE MATL.	TYPE OF BASE	ARM LENGTH / PEDSTL. HEIGHT		REMARKS
1	4	2	*	20		Has controller on it, rusted
2	4	2	*	20		Paint peeled off
						* Base different than others

POLE TYPE
1. SINGLE MAST ARM
2. TWIN MAST ARM
3. COMBINATION
4. PEDESTAL
5. UTILITY
6. OTHER

POLE MATL.
1. ALUMINUM
2. STEEL
3. WOOD
4. OTHER

TYPE OF BASE
1. PLATE
2. STEEL TRANSFORMER
3. ALUM. TRANSFORMER

AUXILIARY EQUIPMENT

VIDEO: No

PRE-EMPTION

CONFLICT MONITOR: EDI MMU-16

BATTERY BACK-UP: None

DETECTOR AMP: None

COMMUNICATION: None

SIGNAL TIMING DATA

INTERSECTION: 11th/12th Ave S & S 22nd St

CONTROLLER: Peek Traffic 3000 Series Controller

DATE:

Basic Timing Data

	Ph1 -	Ph2 -	Ph3 -	Ph4 -	Ph5 -	Ph6 -	Ph7 -	Ph8 -
Min Grn								
Passage								
Max 1	30	30	30	30	30	30	30	30
Max 2	30	30	30	30	30	30	30	30
Yellow	4.0	4.0	4.0	4.0	4.0	4.0	4.0	4.0
Red Clr	1.0	0.5	2.0	2.0	2.0	2.0	2.0	2.0
Walk	0	12	0	0	0	0	0	0
Ped Clear	0	10						
Recall								
Lock/Non								
Act/Non-Act								

Coordination Plan Data

Dial 1/Split 1 Cycle: Offset:

Phase	1	2	3	4	5	6	7	8
Time								
Mode								

Active Periods:

Dial 2/Split 1 Cycle: Offset:

Phase	1	2	3	4	5	6	7	8
Time								
Mode								

Active Periods:

Dial 3/Split 1 Cycle: Offset:

Phase	1	2	3	4	5	6	7	8
Time								
Mode								

Active Periods:

Phasing

N

INDICATE NORTH

↓ ↑	← →						
Cars	Ped						

SIGNAL LAYOUT: S 22nd St + 11th/12th Ave S

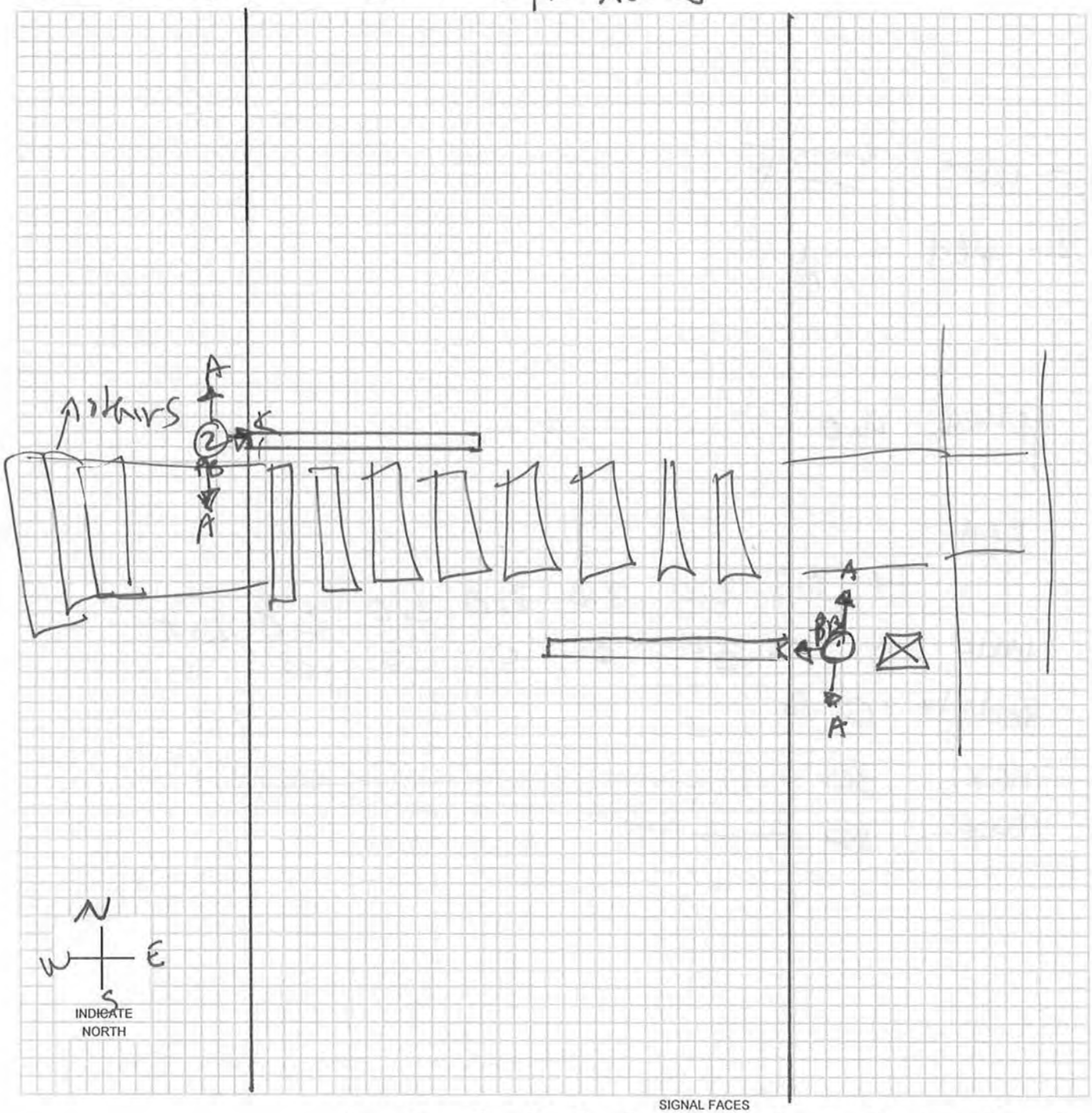

SIGNAL FACES

A	B	C	D	E	F	G	H	I	J	K	L	M	O
12 R	12 R	12 R	12 R	12 R	12 R	12 ◄R	12 ◄R	12 R	12 R	DW	W/DW	W DW	
12 Y	12 ◄Y / 12 Y	12 Y	12 Y	12 Y	12 ◄Y	12 ◄Y	12 ◄Y	12 Y	12 Y	W	CD		
12 G	12 ◄G / 12 G	12 G	12 G	12 ◄G	12 ◄G	12 ◄G	12 ◄FY	12 G	12 G			N: W CD DW	
		12 ◄G	12 ◄Y				12 ◄G	12 G►	12 Y►				
			12 ◄G						12 G►				

LEGEND

- (7) POLE & NUMBER
- SIGNAL INDICATION
- PEDESTRIAN SIGNAL INDICATION
- PB PUSHBUTTON
- 00-00-PD LOOP DECTETOR
- DISTANCE FROM STOP LINE - AREA OF DETECTION - PRESENCE PR; PULSE P; DELAY D; NO DELAY ND; EXTENSION E
- CONTROLLER
- (M) METER
- VIDEO DET CAMERA

-* OPTICALLY PROGRAMMABLE

Crossing: S 22nd St - 11th/12th Ave S ID#: 903

Crash Summary	**Trends**
1. There have been 3 crashes at this location since 2004, the most recent in the study period was 2011. 2. No crash involved a pedestrian or bicyclist 3. One vehicle was reported striking a fixed object: other (1)	1.
Mitigation Options / Potential Improvements	
1. No significant safety concern at intersection. Continue to monitor if safety concern arises.	
Funding Potential	
1. Not needed at this time	

Cost Opinion

Intersection	Item	Period for Modification		
		Short-Term (0-2 Years)	Mid-Term (2-5 Years)	Long-Term (5-15 Years)
S 22nd St - 11th / 12th Ave S	None			
Total				

Intersection Crash Summary

Location: S 22nd St - 11th/12th Ave S
City/County: Fort Dodge, Webster County
Time Period: 2004-May 2014 Crash Period = 10.5 years
Prepared by: OMV

NUMBER OF CRASHES

0	Fatal Crashes	0 fatalities	0 injuries
0	Major Injury Crashes		0 injuries
0	Minor Injury Crashes		0 injuries
0	Possible/Unknown Injury Crashes		0 injuries
3	Property Damage Only Crashes		
Totals: 3	Crashes	0 fatalities	0 injuries

CRASH RATES

Total Crash Rate =	3	/	12.65 MEV	=	0.24 Total Crashes/MEV
Fatal Crash Rate =	0	/	12.65 MEV	=	0.00 Fatal Crashes/MEV
Fatal/Injury Crash Rate =	0	/	12.65 MEV	=	0.00 F & I Crashes/MEV

CRASH FREQUENCY

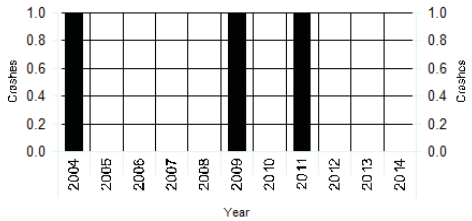

CRASH TYPE

0 Head-on	0 Sideswipe, Same Direction	Non Vehicle Collision Type	
2 Rear-end Crash	0 Sideswipe, Opposite Direction	0 Pedestrian	
0 Broadside/Right angle Crash	0 Parked	0 Bicycle	
0 Angle, Oncoming Left Turn	0 Other	1 Fixed Object	
0 Backing	0 Unknown		

TRAFFIC - AADT

North Approach =	3300
South Approach =	3300
East Approach =	0
West Approach =	0
Million Entering Vehicles (MEV) =	12.65

Notes:
IDOT 2011 AADT

S 22nd St and 11th/12th Ave S

2004 - 2014 Reportable Crashes

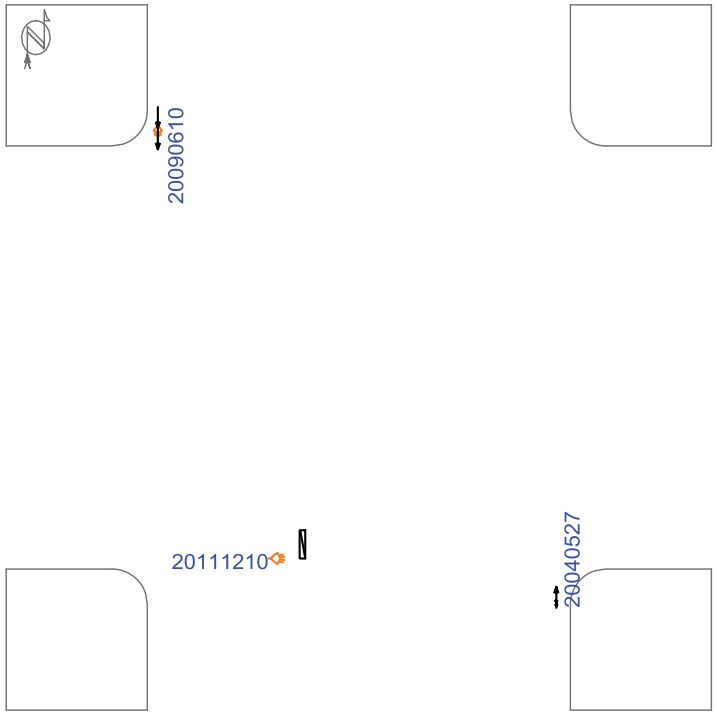

(0) crashes could not be placed in this schematic

Straight
Stopped
Unknown
Backing
Overtaking
Sideswipe
Parked
Erratic
Out of control
Right turn
Left turn
U-turn
Pedestrian
Bicycle
Injury
Fatality
Nighttime
DUI
Fixed objects:
General
Signal
Tree
Pole
Curb
Animal
3rd vehicle
Extra data

Pd' Programming, Inc. 07/14/2014

Iowa Department of Transportation

Major Cause Summary

S 22nd St and 11th/12th Ave S

Report Version 1.1 Jan 2005

Analysis Years: 2004 [1], 2009 [1], 2011 [1]

Crash Summary:

Fatal	-
Major Injury	-
Minor Injury	-
Possible/Unknown	-
PDO	3
Total Crashes	3

Injury Summary:

Fatal	-
Major Injury	-
Minor Injury	-
Possible	-
Unknown	-
Total Injuries	0

TOT Property Damage: $19,407

AVG Property Damage: $6,469

Surface Condition Summary:

Dry	3
Wet	-
Ice	-
Snow	-
Slush	-
Sand/Dirt/Oil/Gravel	-
Water	-
Other	-
Unknown	-
Not Reported	-
Total Crashes	3

Major Cause Summary:

	Animal		Improper Backing
	Ran Traffic Signal		Illegally Parked/Unattended
	Ran Stop Sign		Swerving/Evasive Action
	Crossed Centerline		Over-Correcting/Over-Steering
	FTYROW: At Uncontrolled Intersection		Downhill Runaway
	FTYROW: Making Right Turn on Red Signal		Equipment Failure
	FTYROW: From Stop Sign		Separation of Units
	FTYROW: From Yield Sign		Ran Off Road - Right
	FTYROW: Making Left Turn		Ran Off Road - Straight
	FTYROW: From Driveway		Ran Off Road - Left
	FTYROW: From Parked Position		Lost Control
	FTYROW: To Pedestrian		Inattentive/Distracted By: Passenger
	FTYROW: Other (explain in narrative)		Inattentive/Distracted By: Use of Phone or Other
	Traveling Wrong Way or on Wrong Side of Rd		Inattentive/Distracted By: Fallen Object
	Driving Too Fast for Conditions		Inattentive/Distracted By: Fatigued/Asleep
	Exceeded Authorized Speed		Other: Vision Obstructed
	Made Improper Turn		Oversized Load/ Oversized Vehicle
	Improper Lane Change		Cargo/Equipment Loss or Shift
1	Followed Too Close	2	Other: Other Improper Action
	Disregarded Railroad Signal		Unknown
	Disregarded Warning Sign		Other: No Improper Action
	Operating Vehicle in Reckless/Aggressive Manner		None Indicated

Selection Filter:

None

Analyst: OMV

Notes:

Iowa Department of Transportation

Driver and Time Summary

S 22nd St and 11th/12th Ave S

Report Version 1.0 Aug 2006

Crash Time of Day Summary:

From / To	00:00 01:59	02:00 03:59	04:00 05:59	06:00 07:59	08:00 09:59	10:00 11:59	12:00 13:59	14:00 15:59	16:00 17:59	18:00 19:59	20:00 21:59	22:00 23:59	NR	Total	%
SUN	-	-	-	-	-	-	-	-	-	-	-	-	-		
MON	-	-	-	-	-	-	-	-	-	-	-	-	-		
TUE	-	-	-	-	-	-	-	-	-	-	-	-	-		
WED	-	-	-	-	-	-	-	-	-	-	-	1	-	1	33
THU	-	-	-	1	-	-	-	-	-	-	-	-	-	1	33
FRI	-	-	-	-	-	-	-	-	-	-	-	-	-		
SAT	1	-	-	-	-	-	-	-	-	-	-	-	-	1	33
Tot.	1			1								1		3	
%	33			33								33			100

Driver Age/Gender Summary:

Age	Male	Female	NR	Drivers	%
<14	-	-	-		
14	-	-	-		
15	-	-	-		
16	1	-	-	1	20
17	-	-	-		
18	1	-	-	1	20
19	-	-	-		
20	-	-	-		
21 to 24	-	-	-		
25 to 29	1	-	-	1	20
30 to 34	-	-	-		
35 to 39	-	-	-		
40 to 44	-	-	-		
45 to 49	1	-	-	1	20
50 to 54	-	-	-		
55 to 59	-	-	-		
60 to 64	-	-	-		
65 to 69	-	-	-		
70 to 74	-	-	-		
75 to 79	-	-	-		
80 to 84	-	-	-		
85 to 89	-	-	-		
90 to 94	-	-	-		
95 plus	-	-	-		
NR	-	-	1	1	20
Drivers	4	0	1	5	
%	80	0	20		100

Drug/Alcohol Summary:

	Total	%
Drug		
Alcohol, Less than Statutory		
Alcohol, Statutory		
Drug/Alcohol, Less than Statutory		
Drug/Alcohol, Statutory		
Refused		
Under Influence of Alc/Drugs/Meds		
None Indicated	3	100
Total Crashes	3	100

Fixed Object Struck Summary:

	Vehs.	%
Bridge/Bridge rail/Overpass		
Underpass/Structure Support		
Culvert		
Ditch/Embankment		
Curb/Island/Raised Median		
Guardrail		
Concrete Barrier		
Tree		
Pole - Utility/Light/Etc		
Sign Post		
Mailbox		
Impact Attenuator		
Other Fixed Object	1	20
None	4	80
Total Vehicles	5	100

Selection Filter:

None

Analyst: OMV

Notes:

Crossing: S 22nd St - 11th/12th Ave S ID#: 903

Lane Width	**Turn Lanes**
Approaching N/S: 17 ft	None at crossing
Sidewalk/ADA Ramps	**Lighting**
5 ft sidewalks exist along both sides of S 22nd St and connected by a 5 ft wide crossing. The west side has concrete steps connecting the sidewalk to the crossing. And there are no ramps to cross the street.	There is no street lighting near the crossing
Parking	**Access/Driveways**
Parking is unrestricted near the crossing	There is a residential driveway located 20 ft south of the crossing on the east side.
Miscellaneous	
1. There is a retaining wall located along the west side of the sidewalk on the west side of S 22nd St. Lowering the sidewalk to create an ADA compliant crossing may require reconstruction of the retaining wall. 2. If the crossing is removed, the sidewalks connecting to the street, including the stairs can be removed and the disturbed area seeded/sodded.	

Cost Opinion

Intersection	Item	Period for Modification		
		Short-Term	Mid-Term	Long-Term
		(0-2 Years)	(2-5 Years)	(5-15 Years)
S 22nd St - 11th/12th Ave S	Remove Sidewalk paths to crossing and Crosswalk Markings	$2,000		
Total		$2,000		

CLICK TO RETURN TO INDEX PAGE

Click on intersection to be taken to location.

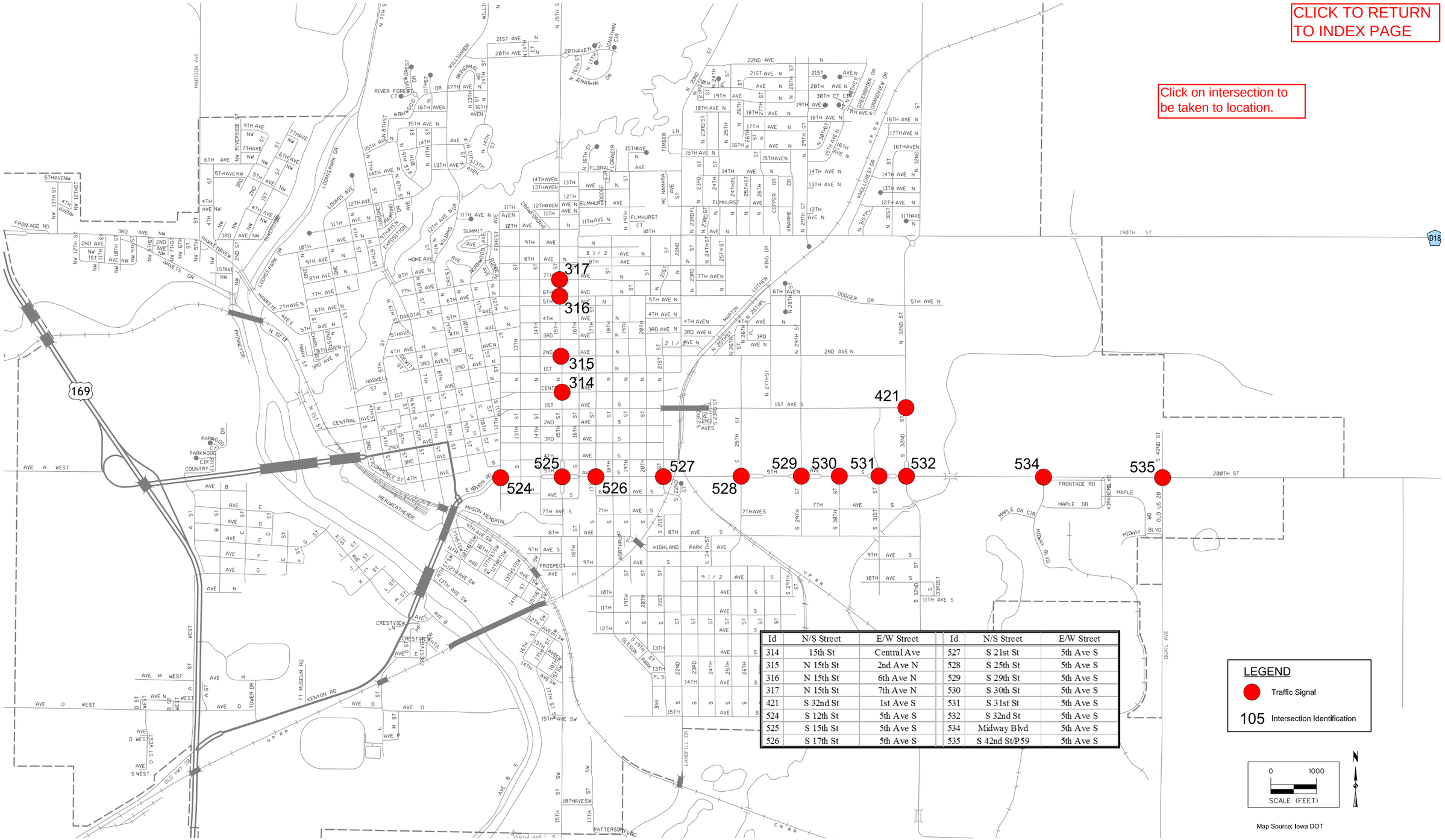

Id	N/S Street	E/W Street	Id	N/S Street	E/W Street
314	15th St	Central Ave	527	S 21st St	5th Ave S
315	N 15th St	2nd Ave N	528	S 25th St	5th Ave S
316	N 15th St	6th Ave N	529	S 29th St	5th Ave S
317	N 15th St	7th Ave N	530	S 30th St	5th Ave S
421	S 32nd St	1st Ave S	531	S 31st St	5th Ave S
524	S 12th St	5th Ave S	532	S 32nd St	5th Ave S
525	S 15th St	5th Ave S	534	Midway Blvd	5th Ave S
526	S 17th St	5th Ave S	535	S 42nd St/P59	5th Ave S

2014 Turning Movement Count Locations
Traffic Systems Improvement Study
Fort Dodge, Iowa

Figure 1

Snyder & Associates
Engineers and Planners

1:2000 Snyder Y:\print_drivers\Color\V8\ColorHalfPostscriptplt.cfg J:\2014_projects\114.0451\Cadd\COUNTLocations.dgn 8/5/2015 TDK

CLICK TO RETURN TO COUNT MAP

Central Ave & 15th St
Fort Dodge Traffic Signal Improvements
Traffic Counts
Fort Dodge, Iowa

File Name : 314-central & 15th
Site Code :
Start Date : 9/10/2014
Page No : 1

Groups Printed- Car - Truck

	15th St Southbound				Central Ave Westbound				15th St Northbound				Central Ave Eastbound				
Start Time	Left	Thru	Right	App. Total	Left	Thru	Right	App. Total	Left	Thru	Right	App. Total	Left	Thru	Right	App. Total	Int. Total
07:00 AM	7	46	12	65	1	20	2	23	3	18	2	23	4	7	4	15	126
07:15 AM	5	50	15	70	4	23	2	29	5	26	4	35	7	7	2	16	150
07:30 AM	10	89	20	119	3	19	6	28	2	57	2	61	18	14	2	34	242
07:45 AM	13	126	36	175	6	40	1	47	1	80	6	87	10	13	3	26	335
Total	35	311	83	429	14	102	11	127	11	181	14	206	39	41	11	91	853
08:00 AM	9	93	32	134	4	30	4	38	3	62	6	71	10	10	4	24	267
08:15 AM	5	67	28	100	7	29	6	42	7	46	9	62	3	21	4	28	232
08:30 AM	5	58	16	79	4	17	5	26	10	43	3	56	7	20	8	35	196
08:45 AM	2	57	17	76	3	13	4	20	5	30	12	47	7	17	5	29	172
Total	21	275	93	389	18	89	19	126	25	181	30	236	27	68	21	116	867
12:00 PM	3	62	19	84	0	3	32	35	4	0	7	11	53	3	0	56	186
12:15 PM	6	68	23	97	0	6	31	37	13	0	5	18	80	6	0	86	238
12:30 PM	5	87	25	117	0	4	34	38	5	0	9	14	56	3	0	59	228
12:45 PM	8	69	21	98	0	9	53	62	9	0	6	15	94	5	0	99	274
Total	22	286	88	396	0	22	150	172	31	0	27	58	283	17	0	300	926
01:00 PM	10	97	27	134	0	8	42	50	7	0	5	12	76	7	0	83	279
01:15 PM	8	83	23	114	0	11	41	52	10	0	12	22	97	7	0	104	292
Total	18	180	50	248	0	19	83	102	17	0	17	34	173	14	0	187	571
03:45 PM	8	86	22	116	0	8	30	38	10	0	8	18	73	8	0	81	253
Total	8	86	22	116	0	8	30	38	10	0	8	18	73	8	0	81	253
04:00 PM	9	58	19	86	0	9	30	39	13	1	4	18	66	3	0	69	212
04:15 PM	11	85	11	107	0	3	25	28	5	0	5	10	72	0	0	72	217
04:30 PM	7	78	12	97	0	10	37	47	7	0	8	15	78	3	0	81	240
04:45 PM	12	89	15	116	0	8	45	53	8	0	6	14	66	3	0	69	252
Total	39	310	57	406	0	30	137	167	33	1	23	57	282	9	0	291	921
Grand Total	143	1448	393	1984	32	270	430	732	127	363	119	609	877	157	32	1066	4391
Apprch %	7.2	73	19.8		4.4	36.9	58.7		20.9	59.6	19.5		82.3	14.7	3		
Total %	3.3	33	9	45.2	0.7	6.1	9.8	16.7	2.9	8.3	2.7	13.9	20	3.6	0.7	24.3	
Car	138	1418	393	1949	29	261	429	719	123	337	118	578	865	152	30	1047	4293
% Car	96.5	97.9	100	98.2	90.6	96.7	99.8	98.2	96.9	92.8	99.2	94.9	98.6	96.8	93.8	98.2	97.8
Truck	5	30	0	35	3	9	1	13	4	26	1	31	12	5	2	19	98
% Truck	3.5	2.1	0	1.8	9.4	3.3	0.2	1.8	3.1	7.2	0.8	5.1	1.4	3.2	6.2	1.8	2.2

Central Ave & 15th St
Fort Dodge Traffic Signal Improvements
Traffic Counts
Fort Dodge, Iowa

File Name : 314-central & 15th
Site Code :
Start Date : 9/10/2014
Page No : 2

	15th St Southbound				Central Ave Westbound				15th St Northbound				Central Ave Eastbound				
Start Time	Left	Thru	Right	App. Total	Left	Thru	Right	App. Total	Left	Thru	Right	App. Total	Left	Thru	Right	App. Total	Int. Total
Peak Hour Analysis From 07:00 AM to 09:45 AM - Peak 1 of 1																	
Peak Hour for Entire Intersection Begins at 07:30 AM																	
07:30 AM	10	89	20	119	3	19	**6**	28	2	57	2	61	**18**	14	2	**34**	242
07:45 AM	**13**	**126**	**36**	**175**	6	**40**	1	**47**	1	**80**	6	**87**	10	13	3	26	**335**
08:00 AM	9	93	32	134	4	30	4	38	3	62	6	71	10	10	**4**	24	267
08:15 AM	5	67	28	100	**7**	29	6	42	**7**	46	**9**	62	3	**21**	4	28	232
Total Volume	37	375	116	528	20	118	17	155	13	245	23	281	41	58	13	112	1076
% App. Total	7	71	22		12.9	76.1	11		4.6	87.2	8.2		36.6	51.8	11.6		
PHF	.712	.744	.806	.754	.714	.738	.708	.824	.464	.766	.639	.807	.569	.690	.813	.824	.803

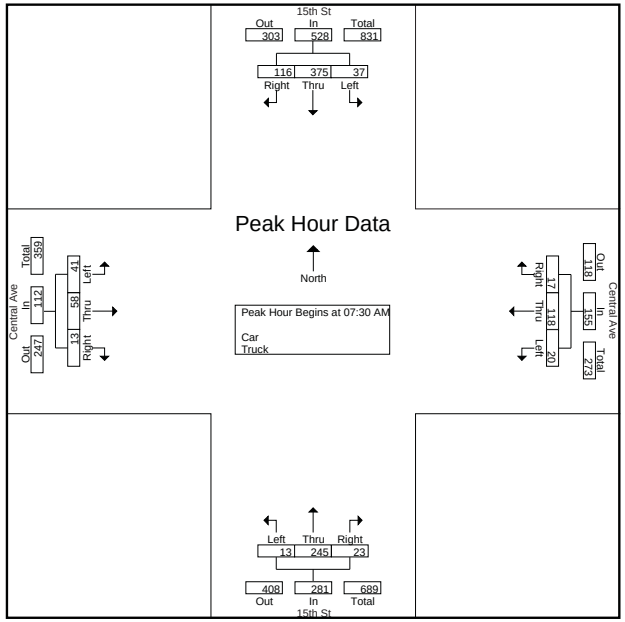

Central Ave & 15th St
Fort Dodge Traffic Signal Improvements
Traffic Counts
Fort Dodge, Iowa

File Name : 314-central & 15th
Site Code :
Start Date : 9/10/2014
Page No : 3

	15th St Southbound				Central Ave Westbound				15th St Northbound				Central Ave Eastbound				
Start Time	Left	Thru	Right	App. Total	Left	Thru	Right	App. Total	Left	Thru	Right	App. Total	Left	Thru	Right	App. Total	Int. Total
Peak Hour Analysis From 10:00 AM to 01:45 PM - Peak 1 of 1																	
Peak Hour for Entire Intersection Begins at 12:30 PM																	
12:30 PM	5	87	25	117	0	4	34	38	5	0	9	14	56	3	0	59	228
12:45 PM	8	69	21	98	0	9	**53**	**62**	9	0	6	15	94	5	0	99	274
01:00 PM	**10**	**97**	**27**	**134**	0	8	42	50	7	0	5	12	76	**7**	0	83	279
01:15 PM	8	83	23	114	0	**11**	41	52	**10**	0	**12**	**22**	**97**	7	0	**104**	**292**
Total Volume	31	336	96	463	0	32	170	202	31	0	32	63	323	22	0	345	1073
% App. Total	6.7	72.6	20.7		0	15.8	84.2		49.2	0	50.8		93.6	6.4	0		
PHF	.775	.866	.889	.864	.000	.727	.802	.815	.775	.000	.667	.716	.832	.786	.000	.829	.919

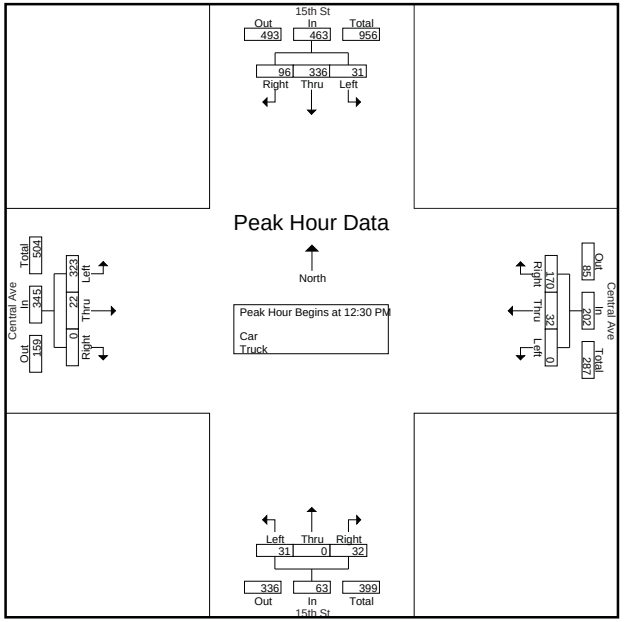

Central Ave & 15th St
Fort Dodge Traffic Signal Improvements
Traffic Counts
Fort Dodge, Iowa

File Name : 314-central & 15th
Site Code :
Start Date : 9/10/2014
Page No : 4

	15th St Southbound				Central Ave Westbound				15th St Northbound				Central Ave Eastbound				
Start Time	Left	Thru	Right	App. Total	Left	Thru	Right	App. Total	Left	Thru	Right	App. Total	Left	Thru	Right	App. Total	Int. Total
Peak Hour Analysis From 02:00 PM to 06:45 PM - Peak 1 of 1																	
Peak Hour for Entire Intersection Begins at 03:45 PM																	
03:45 PM	8	**86**	**22**	**116**	0	8	30	38	10	0	**8**	**18**	73	**8**	0	**81**	**253**
04:00 PM	9	58	19	86	0	9	30	39	**13**	**1**	4	18	66	3	0	69	212
04:15 PM	**11**	85	11	107	0	3	25	28	5	0	5	10	72	0	0	72	217
04:30 PM	7	78	12	97	0	**10**	**37**	**47**	7	0	8	15	**78**	3	0	81	240
Total Volume	35	307	64	406	0	30	122	152	35	1	25	61	289	14	0	303	922
% App. Total	8.6	75.6	15.8		0	19.7	80.3		57.4	1.6	41		95.4	4.6	0		
PHF	.795	.892	.727	.875	.000	.750	.824	.809	.673	.250	.781	.847	.926	.438	.000	.935	.911

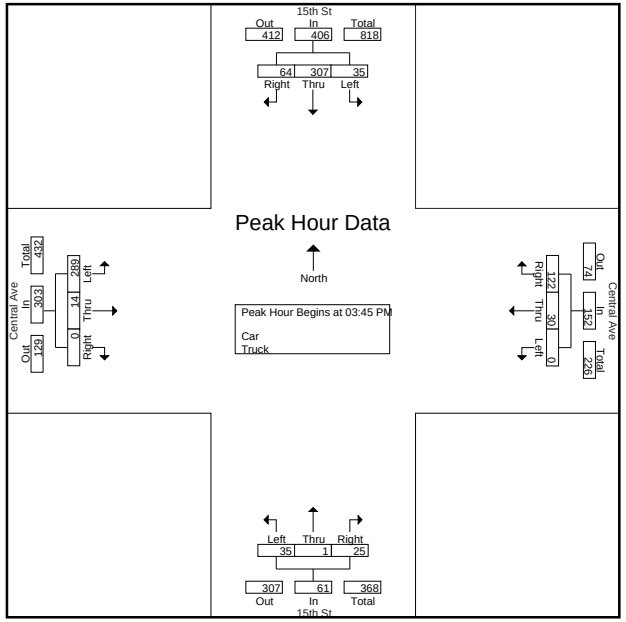

CLICK TO RETURN TO COUNT MAP

N 15th St & 2nd Ave N
Fort Dodge Traffic Signal Improvements
Traffic Counts
Fort Dodge, Iowa

File Name : 315-2nd N & N 15th
Site Code : 00000000
Start Date : 9/10/2014
Page No : 1

Groups Printed- Car - Truck

	N 15TH ST Southbound					2ND AVE N Westbound					N 15TH ST Northbound					2ND AVE N Eastbound					
Start Time			Right	Peds	App. Total	Left	Thru	Right	Peds	App. Total	Left	Thru	Right	Peds	App. Total	Left	Thru	Right	Peds	App. Total	Int. Total
11:45 AM	13	41	4	0	58	19	27	15	0	61	5	56	15	0	76	7	21	4	0	32	227
Total	13	41	4	0	58	19	27	15	0	61	5	56	15	0	76	7	21	4	0	32	227
12:00 PM	12	76	2	0	90	21	42	20	0	83	2	59	19	0	80	7	35	2	0	44	297
12:15 PM	19	58	5	0	82	17	42	16	0	75	6	53	16	0	75	2	31	4	0	37	269
12:30 PM	25	70	5	0	100	17	38	17	0	72	2	60	19	0	81	10	19	2	0	31	284
12:45 PM	15	78	6	0	99	18	50	18	0	86	3	48	15	0	66	3	23	3	0	29	280
Total	71	282	18	0	371	73	172	71	0	316	13	220	69	0	302	22	108	11	0	141	1130
01:00 PM	7	63	5	0	75	9	35	21	0	65	7	73	14	0	94	5	20	4	0	29	263
Total	7	63	5	0	75	9	35	21	0	65	7	73	14	0	94	5	20	4	0	29	263
04:00 PM	12	68	9	0	89	20	37	15	0	72	2	68	19	0	89	6	35	2	0	43	293
04:15 PM	24	70	9	0	103	31	36	17	1	85	2	88	23	0	113	1	26	1	0	28	329
04:30 PM	25	72	5	0	102	16	31	29	4	80	3	88	16	1	108	13	27	3	0	43	333
04:45 PM	18	77	3	0	98	20	40	20	0	80	3	81	22	0	106	11	33	3	0	47	331
Total	79	287	26	0	392	87	144	81	5	317	10	325	80	1	416	31	121	9	0	161	1286
05:00 PM	21	84	7	0	112	19	32	23	0	74	1	102	15	0	118	15	53	4	0	72	376
05:15 PM	14	58	6	0	78	14	49	26	0	89	10	98	20	0	128	15	31	3	0	49	344
05:30 PM	14	54	1	0	69	18	35	18	0	71	5	84	13	0	102	6	24	6	0	36	278
05:45 PM	16	62	3	0	81	18	39	24	0	81	4	94	17	1	116	4	22	7	0	33	311
Total	65	258	17	0	340	69	155	91	0	315	20	378	65	1	464	40	130	20	0	190	1309
Grand Total	235	931	70	0	1236	257	533	279	5	1074	55	1052	243	2	1352	105	400	48	0	553	4215
Apprch %	19	75.3	5.7	0		23.9	49.6	26	0.5		4.1	77.8	18	0.1		19	72.3	8.7	0		
Total %	5.6	22.1	1.7	0	29.3	6.1	12.6	6.6	0.1	25.5	1.3	25	5.8	0	32.1	2.5	9.5	1.1	0	13.1	
Car	235	924	70	0	1229	257	531	279	5	1072	55	1040	243	2	1340	105	400	48	0	553	4194
% Car	100	99.2	100	0	99.4	100	99.6	100	100	99.8	100	98.9	100	100	99.1	100	100	100	0	100	99.5
Truck	0	7	0	0	7	0	2	0	0	2	0	12	0	0	12	0	0	0	0	0	21
% Truck	0	0.8	0	0	0.6	0	0.4	0	0	0.2	0	1.1	0	0	0.9	0	0	0	0	0	0.5

N 15th St & 2nd Ave N
Fort Dodge Traffic Signal Improvements
Traffic Counts
Fort Dodge, Iowa

File Name : 315-2nd N & N 15th
Site Code : 00000000
Start Date : 9/10/2014
Page No : 2

	N 15TH ST Southbound					2ND AVE N Westbound					N 15TH ST Northbound					2ND AVE N Eastbound					
Start Time	Left	Thru	Right	Peds	App. Total	Left	Thru	Right	Peds	App. Total	Left	Thru	Right	Peds	App. Total	Left	Thru	Right	Peds	App. Total	Int. Total
Peak Hour Analysis From 11:45 AM to 02:00 PM - Peak 1 of 1																					
Peak Hour for Entire Intersection Begins at 12:00 PM																					
12:00 PM	12	76	2	0	90	**21**	42	**20**	0	83	2	59	**19**	0	80	7	**35**	2	0	**44**	**297**
12:15 PM	19	58	5	0	82	17	42	16	0	75	**6**	53	16	0	75	2	31	**4**	0	37	269
12:30 PM	**25**	70	5	0	**100**	17	38	17	0	72	2	**60**	19	0	**81**	**10**	19	2	0	31	284
12:45 PM	15	**78**	**6**	0	99	18	**50**	18	0	**86**	3	48	15	0	66	3	23	3	0	29	280
Total Volume	71	282	18	0	371	73	172	71	0	316	13	220	69	0	302	22	108	11	0	141	1130
% App. Total	19.1	76	4.9	0		23.1	54.4	22.5	0		4.3	72.8	22.8	0		15.6	76.6	7.8	0		
PHF	.710	.904	.750	.000	.928	.869	.860	.888	.000	.919	.542	.917	.908	.000	.932	.550	.771	.688	.000	.801	.951

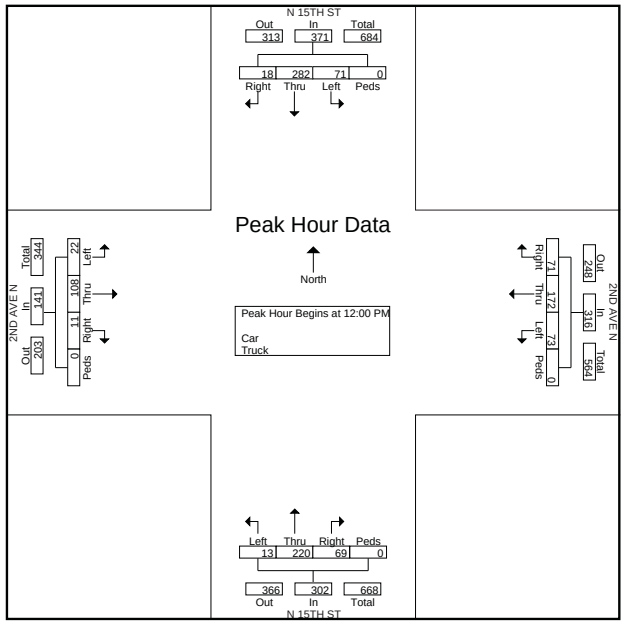

N 15th St & 2nd Ave N
Fort Dodge Traffic Signal Improvements
Traffic Counts
Fort Dodge, Iowa

File Name : 315-2nd N & N 15th
Site Code : 00000000
Start Date : 9/10/2014
Page No : 3

	N 15TH ST Southbound					2ND AVE N Westbound					N 15TH ST Northbound					2ND AVE N Eastbound					
Start Time	Left	Thru	Right	Peds	App. Total	Left	Thru	Right	Peds	App. Total	Left	Thru	Right	Peds	App. Total	Left	Thru	Right	Peds	App. Total	Int. Total
Peak Hour Analysis From 02:00 PM to 05:45 PM - Peak 1 of 1																					
Peak Hour for Entire Intersection Begins at 04:30 PM																					
04:30 PM	**25**	72	5	0	102	16	31	**29**	**4**	80	3	88	16	**1**	108	13	27	3	0	43	333
04:45 PM	18	77	3	0	98	**20**	40	20	0	80	3	81	**22**	0	106	11	33	3	0	47	331
05:00 PM	21	**84**	**7**	0	**112**	19	32	23	0	74	1	**102**	15	0	118	**15**	**53**	**4**	0	**72**	**376**
05:15 PM	14	58	6	0	78	14	**49**	26	0	**89**	**10**	98	20	0	**128**	15	31	3	0	49	344
Total Volume	78	291	21	0	390	69	152	98	4	323	17	369	73	1	460	54	144	13	0	211	1384
% App. Total	20	74.6	5.4	0		21.4	47.1	30.3	1.2		3.7	80.2	15.9	0.2		25.6	68.2	6.2	0		
PHF	.780	.866	.750	.000	.871	.863	.776	.845	.250	.907	.425	.904	.830	.250	.898	.900	.679	.813	.000	.733	.920

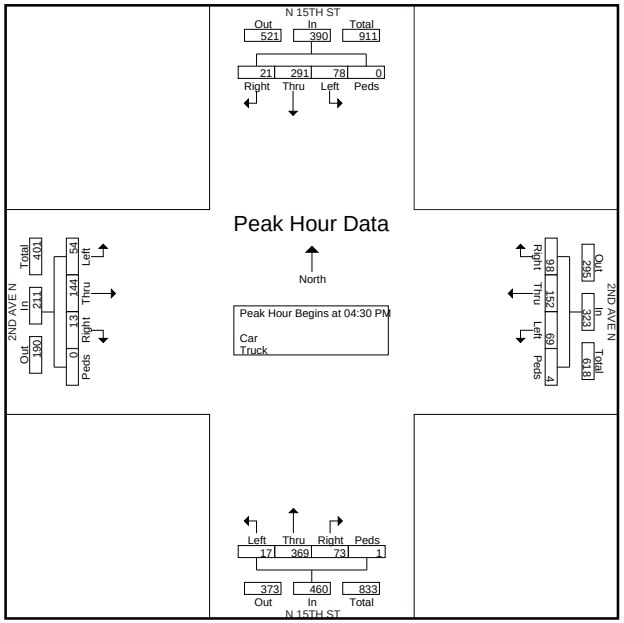

CLICK TO RETURN TO COUNT MAP

6th Ave N & N 15th St
Fort Dodge Traffic Signal Improvements
Traffic Counts
Fort Dodge, Iowa

File Name : 316-6th N & N 15th
Site Code : N 15th St & 6th Ave N
Start Date : 9/9/2014
Page No : 1

Groups Printed- Car - Truck

	N 15th St Southbound			N 15th St Northbound			6th Ave N Eastbound				
Start Time	Left	Thru	App. Total	Thru	Right	App. Total	Left	Thru	Right	App. Total	Int. Total
07:00 AM	9	53	62	27	5	32	7	32	16	55	149
07:15 AM	14	80	94	39	6	45	10	68	17	95	234
07:30 AM	27	132	159	61	23	84	18	94	28	140	383
07:45 AM	26	166	192	62	23	85	12	113	38	163	440
Total	76	431	507	189	57	246	47	307	99	453	1206
08:00 AM	7	113	120	68	7	75	12	42	17	71	266
08:15 AM	6	96	102	48	5	53	12	19	10	41	196
08:30 AM	2	75	77	52	5	57	1	20	15	36	170
08:45 AM	3	90	93	48	3	51	4	17	16	37	181
Total	18	374	392	216	20	236	29	98	58	185	813
11:30 AM	9	60	69	63	7	70	10	30	12	52	191
11:45 AM	5	74	79	56	12	68	13	28	13	54	201
Total	14	134	148	119	19	138	23	58	25	106	392
12:00 PM	6	47	53	70	11	81	17	45	10	72	206
12:15 PM	4	64	68	58	5	63	5	27	9	41	172
12:30 PM	8	68	76	65	5	70	7	25	15	47	193
12:45 PM	2	88	90	62	5	67	4	43	14	61	218
Total	20	267	287	255	26	281	33	140	48	221	789
01:00 PM	4	61	65	70	7	77	10	24	20	54	196
01:15 PM	5	69	74	71	6	77	17	38	13	68	219
Total	9	130	139	141	13	154	27	62	33	122	415
03:00 PM	26	72	98	96	27	123	13	62	10	85	306
03:15 PM	15	73	88	82	17	99	18	72	18	108	295
03:30 PM	12	108	120	117	19	136	14	49	17	80	336
03:45 PM	11	97	108	110	13	123	15	53	17	85	316
Total	64	350	414	405	76	481	60	236	62	358	1253
04:00 PM	2	76	78	90	15	105	13	35	12	60	243
04:15 PM	10	60	70	98	9	107	18	35	16	69	246
04:30 PM	6	77	83	94	11	105	22	54	20	96	284
04:45 PM	7	82	89	106	14	120	16	64	19	99	308
Total	25	295	320	388	49	437	69	188	67	324	1081
05:00 PM	7	68	75	125	19	144	26	71	18	115	334
05:15 PM	5	68	73	72	13	85	14	57	22	93	251
05:30 PM	9	64	73	90	11	101	16	54	18	88	262
05:45 PM	5	74	79	82	12	94	10	25	10	45	218
Total	26	274	300	369	55	424	66	207	68	341	1065
Grand Total	252	2255	2507	2082	315	2397	354	1296	460	2110	7014
Apprch %	10.1	89.9		86.9	13.1		16.8	61.4	21.8		
Total %	3.6	32.1	35.7	29.7	4.5	34.2	5	18.5	6.6	30.1	
Car	244	2185	2429	2018	305	2323	335	1278	456	2069	6821
% Car	96.8	96.9	96.9	96.9	96.8	96.9	94.6	98.6	99.1	98.1	97.2
Truck	8	70	78	64	10	74	19	18	4	41	193
% Truck	3.2	3.1	3.1	3.1	3.2	3.1	5.4	1.4	0.9	1.9	2.8

6th Ave N & N 15th St
Fort Dodge Traffic Signal Improvements
Traffic Counts
Fort Dodge, Iowa

File Name : 316-6th N & N 15th
Site Code : N 15th St & 6th Ave N
Start Date : 9/9/2014
Page No : 2

	N 15th St Southbound			N 15th St Northbound			6th Ave N Eastbound				
Start Time	Left	Thru	App. Total	Thru	Right	App. Total	Left	Thru	Right	App. Total	Int. Total
Peak Hour Analysis From 07:00 AM to 09:45 AM - Peak 1 of 1											
Peak Hour for Entire Intersection Begins at 07:15 AM											
07:15 AM	14	80	94	39	6	45	10	68	17	95	234
07:30 AM	**27**	132	159	61	**23**	84	**18**	94	28	140	383
07:45 AM	26	**166**	**192**	62	23	**85**	12	**113**	**38**	**163**	**440**
08:00 AM	7	113	120	**68**	7	75	12	42	17	71	266
Total Volume	74	491	565	230	59	289	52	317	100	469	1323
% App. Total	13.1	86.9		79.6	20.4		11.1	67.6	21.3		
PHF	.685	.739	.736	.846	.641	.850	.722	.701	.658	.719	.752

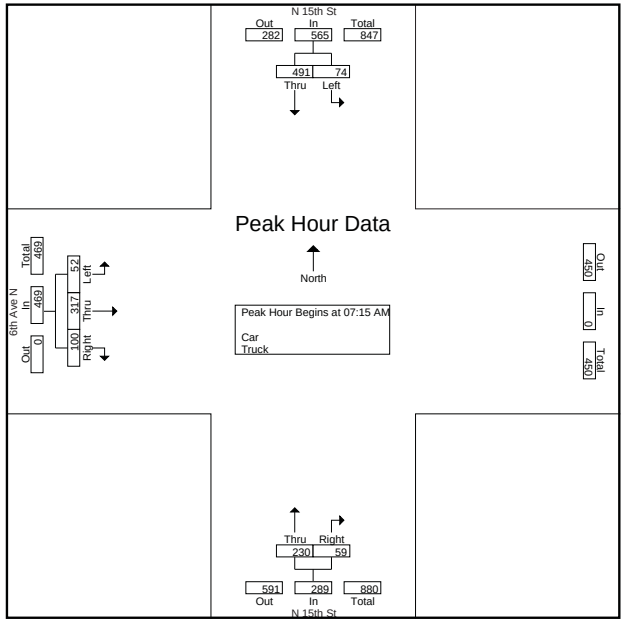

6th Ave N & N 15th St
Fort Dodge Traffic Signal Improvements
Traffic Counts
Fort Dodge, Iowa

File Name : 316-6th N & N 15th
Site Code : N 15th St & 6th Ave N
Start Date : 9/9/2014
Page No : 3

	N 15th St Southbound			N 15th St Northbound			6th Ave N Eastbound				
Start Time	Left	Thru	App. Total	Thru	Right	App. Total	Left	Thru	Right	App. Total	Int. Total
Peak Hour Analysis From 10:00 AM to 01:45 PM - Peak 1 of 1											
Peak Hour for Entire Intersection Begins at 12:30 PM											
12:30 PM	**8**	68	76	65	5	70	7	25	15	47	193
12:45 PM	2	**88**	**90**	62	5	67	4	**43**	14	61	218
01:00 PM	4	61	65	70	**7**	**77**	10	24	**20**	54	196
01:15 PM	5	69	74	**71**	6	77	**17**	38	13	**68**	**219**
Total Volume	19	286	305	268	23	291	38	130	62	230	826
% App. Total	6.2	93.8		92.1	7.9		16.5	56.5	27		
PHF	.594	.813	.847	.944	.821	.945	.559	.756	.775	.846	.943

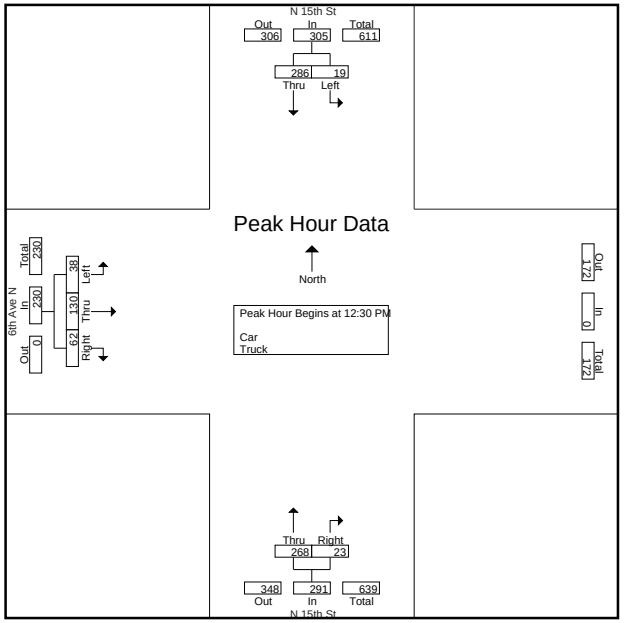

6th Ave N & N 15th St
Fort Dodge Traffic Signal Improvements
Traffic Counts
Fort Dodge, Iowa

File Name : 316-6th N & N 15th
Site Code : N 15th St & 6th Ave N
Start Date : 9/9/2014
Page No : 4

	N 15th St Southbound			N 15th St Northbound			6th Ave N Eastbound				
Start Time	Left	Thru	App. Total	Thru	Right	App. Total	Left	Thru	Right	App. Total	Int. Total
Peak Hour Analysis From 02:00 PM to 05:45 PM - Peak 1 of 1											
Peak Hour for Entire Intersection Begins at 03:00 PM											
03:00 PM	**26**	72	98	96	**27**	123	13	62	10	85	306
03:15 PM	15	73	88	82	17	99	**18**	**72**	**18**	**108**	295
03:30 PM	12	**108**	**120**	**117**	19	**136**	14	49	17	80	**336**
03:45 PM	11	97	108	110	13	123	15	53	17	85	316
Total Volume	64	350	414	405	76	481	60	236	62	358	1253
% App. Total	15.5	84.5		84.2	15.8		16.8	65.9	17.3		
PHF	.615	.810	.863	.865	.704	.884	.833	.819	.861	.829	.932

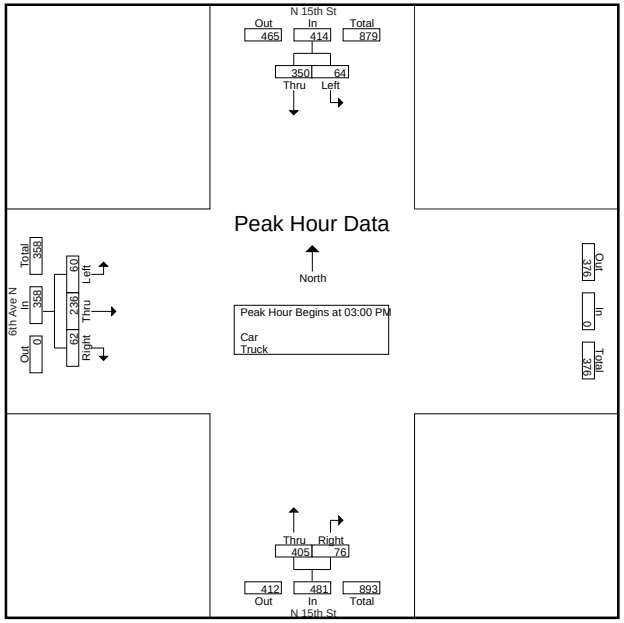

CLICK TO RETURN TO COUNT MAP

N 15th St & 7th Ave N
Fort Dodge Traffic Signal Improvements
Traffic Counts
Fort Dodge, Iowa

File Name : 317-7th N & N 15th
Site Code : 00000000
Start Date : 9/9/2014
Page No : 1

Groups Printed- Car - Truck

	N 15TH ST Southbound					7TH AVE N Westbound					N 15TH ST Northbound					7TH AVE N Eastbound					
Start Time			Right	Peds	App. Total	Left	Thru	Right	Peds	App. Total	Left	Thru	Right	Peds	App. Total	Left	Thru	Right	Peds	App. Total	Int. Total
06:45 AM	0	61	11	0	72	9	11	1	0	21	2	29	0	0	31	0	0	0	0	0	124
Total	0	61	11	0	72	9	11	1	0	21	2	29	0	0	31	0	0	0	0	0	124
07:00 AM	0	57	7	0	64	2	18	1	0	21	3	23	0	0	26	0	0	0	0	0	111
07:15 AM	0	76	11	0	87	16	37	5	0	58	7	40	0	0	47	0	0	0	0	0	192
07:30 AM	0	122	18	0	140	27	47	5	0	79	7	63	0	0	70	0	0	0	0	0	289
07:45 AM	0	151	23	0	174	41	77	6	0	124	15	62	0	0	77	0	0	0	0	0	375
Total	0	406	59	0	465	86	179	17	0	282	32	188	0	0	220	0	0	0	0	0	967
08:00 AM	0	88	16	0	104	40	68	10	0	118	14	72	1	0	87	0	0	0	0	0	309
Total	0	88	16	0	104	40	68	10	0	118	14	72	1	0	87	0	0	0	0	0	309
11:45 AM	0	58	6	0	64	4	33	4	0	41	9	62	0	0	71	0	0	0	0	0	176
Total	0	58	6	0	64	4	33	4	0	41	9	62	0	0	71	0	0	0	0	0	176
12:00 PM	0	57	4	0	61	6	21	6	0	33	18	67	0	0	85	0	0	0	0	0	179
12:15 PM	0	68	7	0	75	6	22	2	0	30	13	57	0	0	70	0	0	0	0	0	175
12:30 PM	0	55	6	0	61	8	38	4	0	50	8	51	0	0	59	0	0	0	0	0	170
12:45 PM	0	75	14	0	89	9	29	2	0	40	12	47	0	0	59	0	0	0	0	0	188
Total	0	255	31	0	286	29	110	14	0	153	51	222	0	0	273	0	0	0	0	0	712
01:00 PM	0	54	9	0	63	6	30	5	0	41	22	80	0	0	102	0	0	0	0	0	206
Total	0	54	9	0	63	6	30	5	0	41	22	80	0	0	102	0	0	0	0	0	206
03:45 PM	0	71	7	0	78	16	33	10	0	59	17	84	0	0	101	0	0	0	0	0	238
Total	0	71	7	0	78	16	33	10	0	59	17	84	0	0	101	0	0	0	0	0	238
04:00 PM	0	63	13	0	76	10	35	9	1	55	21	95	0	0	116	0	0	0	0	0	247
04:15 PM	0	66	8	0	74	6	30	5	0	41	18	93	0	0	111	0	0	0	0	0	226
04:30 PM	0	85	10	0	95	9	36	9	0	54	18	98	0	0	116	0	0	0	0	0	265
04:45 PM	0	54	11	0	65	6	40	6	0	52	27	99	0	0	126	0	0	0	0	0	243
Total	0	268	42	0	310	31	141	29	1	202	84	385	0	0	469	0	0	0	0	0	981
05:00 PM	0	70	12	0	82	9	46	6	1	62	20	110	0	0	130	0	0	0	0	0	274
05:15 PM	0	49	16	0	65	7	35	8	0	50	15	69	0	0	84	0	0	0	0	0	199
05:30 PM	0	69	10	0	79	14	38	9	0	61	20	77	0	0	97	0	0	0	0	0	237
Grand Total	0	1449	219	0	1668	251	724	113	2	1090	286	1378	1	0	1665	0	0	0	0	0	4423
Apprch %	0	86.9	13.1	0		23	66.4	10.4	0.2		17.2	82.8	0.1	0		0	0	0	0		
Total %	0	32.8	5	0	37.7	5.7	16.4	2.6	0	24.6	6.5	31.2	0	0	37.6	0	0	0	0	0	
Car	0	1429	217	0	1646	248	723	111	2	1084	284	1341	1	0	1626	0	0	0	0	0	4356
% Car	0	98.6	99.1	0	98.7	98.8	99.9	98.2	100	99.4	99.3	97.3	100	0	97.7	0	0	0	0	0	98.5
Truck	0	20	2	0	22	3	1	2	0	6	2	37	0	0	39	0	0	0	0	0	67
% Truck	0	1.4	0.9	0	1.3	1.2	0.1	1.8	0	0.6	0.7	2.7	0	0	2.3	0	0	0	0	0	1.5

N 15th St & 7th Ave N
Fort Dodge Traffic Signal Improvements
Traffic Counts
Fort Dodge, Iowa

File Name : 317-7th N & N 15th
Site Code : 00000000
Start Date : 9/9/2014
Page No : 2

	N 15TH ST Southbound					7TH AVE N Westbound					N 15TH ST Northbound					7TH AVE N Eastbound					
Start Time	Left	Thru	Right	Peds	App. Total	Left	Thru	Right	Peds	App. Total	Left	Thru	Right	Peds	App. Total	Left	Thru	Right	Peds	App. Total	Int. Total
Peak Hour Analysis From 06:45 AM to 09:45 AM - Peak 1 of 1																					
Peak Hour for Entire Intersection Begins at 07:15 AM																					
07:15 AM	0	76	11	0	87	16	37	5	0	58	7	40	0	0	47	0	0	0	0	0	192
07:30 AM	0	122	18	0	140	27	47	5	0	79	7	63	0	0	70	0	0	0	0	0	289
07:45 AM	0	**151**	**23**	0	**174**	**41**	**77**	6	0	**124**	**15**	62	0	0	77	0	0	0	0	0	**375**
08:00 AM	0	88	16	0	104	40	68	**10**	0	118	14	**72**	**1**	0	**87**	0	0	0	0	0	309
Total Volume	0	437	68	0	505	124	229	26	0	379	43	237	1	0	281	0	0	0	0	0	1165
% App. Total	0	86.5	13.5	0		32.7	60.4	6.9	0		15.3	84.3	0.4	0		0	0	0	0		
PHF	.000	.724	.739	.000	.726	.756	.744	.650	.000	.764	.717	.823	.250	.000	.807	.000	.000	.000	.000	.000	.777

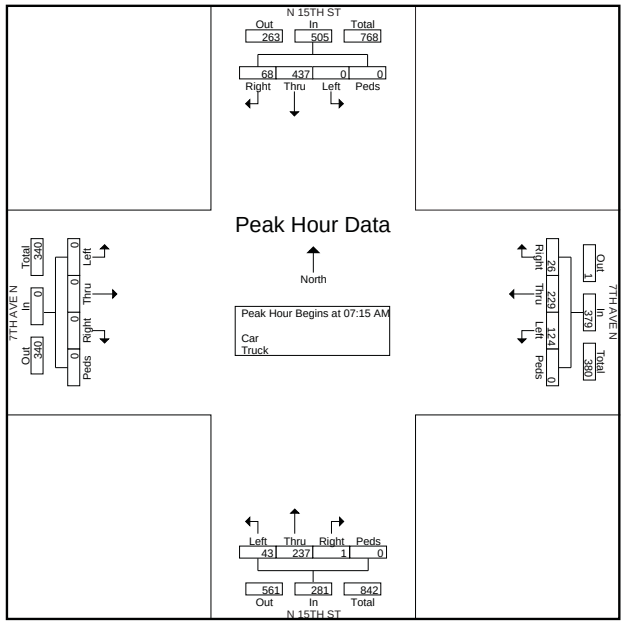

N 15th St & 7th Ave N
Fort Dodge Traffic Signal Improvements
Traffic Counts
Fort Dodge, Iowa

File Name : 317-7th N & N 15th
Site Code : 00000000
Start Date : 9/9/2014
Page No : 3

	N 15TH ST Southbound					7TH AVE N Westbound					N 15TH ST Northbound					7TH AVE N Eastbound					
Start Time	Left	Thru	Right	Peds	App. Total	Left	Thru	Right	Peds	App. Total	Left	Thru	Right	Peds	App. Total	Left	Thru	Right	Peds	App. Total	Int. Total
Peak Hour Analysis From 10:00 AM to 01:45 PM - Peak 1 of 1																					
Peak Hour for Entire Intersection Begins at 12:15 PM																					
12:15 PM	0	68	7	0	75	6	22	2	0	30	13	57	0	0	70	0	0	0	0	0	175
12:30 PM	0	55	6	0	61	8	**38**	4	0	**50**	8	51	0	0	59	0	0	0	0	0	170
12:45 PM	0	**75**	**14**	0	**89**	**9**	29	2	0	40	12	47	0	0	59	0	0	0	0	0	188
01:00 PM	0	54	9	0	63	6	30	**5**	0	41	**22**	**80**	0	0	**102**	0	0	0	0	0	**206**
Total Volume	0	252	36	0	288	29	119	13	0	161	55	235	0	0	290	0	0	0	0	0	739
% App. Total	0	87.5	12.5	0		18	73.9	8.1	0		19	81	0	0		0	0	0	0		
PHF	.000	.840	.643	.000	.809	.806	.783	.650	.000	.805	.625	.734	.000	.000	.711	.000	.000	.000	.000	.000	.897

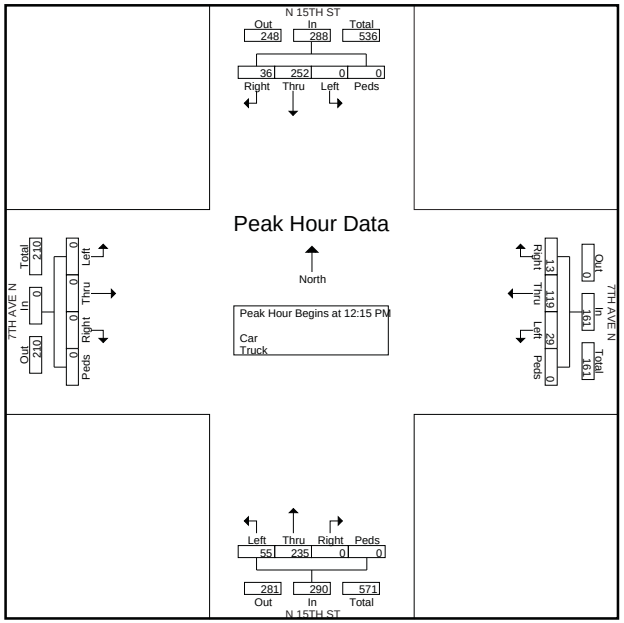

N 15th St & 7th Ave N
Fort Dodge Traffic Signal Improvements
Traffic Counts
Fort Dodge, Iowa

File Name : 317-7th N & N 15th
Site Code : 00000000
Start Date : 9/9/2014
Page No : 4

	N 15TH ST Southbound					7TH AVE N Westbound					N 15TH ST Northbound					7TH AVE N Eastbound					
Start Time	Left	Thru	Right	Peds	App. Total	Left	Thru	Right	Peds	App. Total	Left	Thru	Right	Peds	App. Total	Left	Thru	Right	Peds	App. Total	Int. Total
Peak Hour Analysis From 02:00 PM to 05:30 PM - Peak 1 of 1																					
Peak Hour for Entire Intersection Begins at 04:15 PM																					
04:15 PM	0	66	8	0	74	6	30	5	0	41	18	93	0	0	111	0	0	0	0	0	226
04:30 PM	0	**85**	10	0	**95**	**9**	36	**9**	0	54	18	98	0	0	116	0	0	0	0	0	265
04:45 PM	0	54	11	0	65	6	40	6	0	52	**27**	99	0	0	126	0	0	0	0	0	243
05:00 PM	0	70	**12**	0	82	9	**46**	6	**1**	**62**	20	**110**	0	0	**130**	0	0	0	0	0	**274**
Total Volume	0	275	41	0	316	30	152	26	1	209	83	400	0	0	483	0	0	0	0	0	1008
% App. Total	0	87	13	0		14.4	72.7	12.4	0.5		17.2	82.8	0	0		0	0	0	0		
PHF	.000	.809	.854	.000	.832	.833	.826	.722	.250	.843	.769	.909	.000	.000	.929	.000	.000	.000	.000	.000	.920

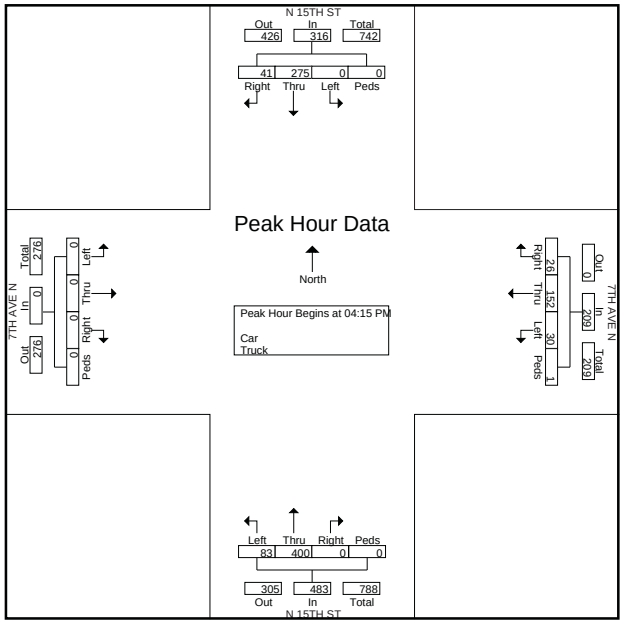

CLICK TO RETURN TO COUNT MAP

1st Ave S & S 32nd St
Fort Dodge Traffic Signal Improvements
Traffic Counts
Fort Dodge, Iowa

File Name : 421-1st S & S 32nd
Site Code : 1st Ave S & S 32nd St
Start Date : 10/21/2014
Page No : 1

Groups Printed- Lights - Mediums - Articulated Trucks - Bicycles on Road - Bicycles on Crosswalk - Pedestrians

	S 32nd St Southbound					1st Ave S Westbound					S 32nd St Northbound					1st Ave S Eastbound					
Start Time			Right	Peds	App. Total	Left	Thru	Right	Peds	App. Total	Left	Thru	Right	Peds	App. Total	Left	Thru	Right	Peds	App. Total	Int. Total
07:00 AM	0	57	15	0	72	0	1	0	0	1	8	21	0	0	29	5	0	5	0	10	112
07:15 AM	0	70	11	0	81	0	0	0	0	0	14	44	0	0	58	8	0	5	0	13	152
07:30 AM	1	77	30	0	108	0	0	0	0	0	13	62	0	0	75	9	0	16	1	26	209
07:45 AM	0	126	23	0	149	0	0	0	0	0	33	102	2	0	137	7	0	15	0	22	308
Total	1	330	79	0	410	0	1	0	0	1	68	229	2	0	299	29	0	41	1	71	781
08:00 AM	0	83	25	0	108	0	0	0	0	0	12	53	0	0	65	8	1	20	0	29	202
08:15 AM	1	56	13	0	70	0	0	0	0	0	21	49	2	0	72	5	2	19	0	26	168
08:30 AM	1	55	23	0	79	1	0	0	0	1	21	39	0	0	60	8	0	13	0	21	161
08:45 AM	0	53	9	0	62	0	0	0	0	0	18	40	1	0	59	10	1	15	0	26	147
Total	2	247	70	0	319	1	0	0	0	1	72	181	3	0	256	31	4	67	0	102	678
09:00 AM	2	44	10	0	56	0	0	0	0	0	28	34	0	0	62	2	0	25	0	27	145
09:15 AM	0	51	13	0	64	0	0	0	0	0	21	39	0	0	60	10	1	18	0	29	153
09:30 AM	0	43	19	0	62	0	0	1	0	1	27	28	1	0	56	8	0	28	1	37	156
09:45 AM	0	39	27	0	66	1	0	0	0	1	31	46	0	0	77	12	0	15	1	28	172
Total	2	177	69	0	248	1	0	1	0	2	107	147	1	0	255	32	1	86	2	121	626
10:00 AM	1	40	13	0	54	0	0	0	0	0	22	40	1	0	63	13	0	28	0	41	158
10:15 AM	0	46	13	0	59	1	1	0	0	2	22	39	0	0	61	14	0	27	0	41	163
10:30 AM	0	52	19	0	71	1	0	0	0	1	21	27	0	0	48	13	0	31	0	44	164
10:45 AM	0	47	19	0	66	0	1	0	0	1	25	49	0	0	74	22	0	21	0	43	184
Total	1	185	64	0	250	2	2	0	0	4	90	155	1	0	246	62	0	107	0	169	669
11:00 AM	0	43	15	0	58	0	1	0	0	1	22	41	1	0	64	15	2	18	0	35	158
11:15 AM	1	52	17	0	70	0	1	0	0	1	23	50	1	0	74	23	0	33	0	56	201
11:30 AM	1	48	20	0	69	0	3	0	0	3	16	41	1	0	58	19	0	37	0	56	186
11:45 AM	1	52	36	0	89	1	4	0	0	5	25	65	2	0	92	19	0	34	0	53	239
Total	3	195	88	0	286	1	9	0	0	10	86	197	5	0	288	76	2	122	0	200	784
12:00 PM	0	49	25	0	74	0	0	2	0	2	33	61	0	0	94	17	0	24	0	41	211
12:15 PM	0	55	16	0	71	1	0	1	0	2	36	40	2	0	78	26	0	29	0	55	206
12:30 PM	0	53	15	0	68	0	0	1	0	1	43	53	0	0	96	24	0	34	1	59	224
12:45 PM	0	54	16	0	70	1	0	0	0	1	22	62	1	0	85	35	0	42	0	77	233
Total	0	211	72	0	283	2	0	4	0	6	134	216	3	0	353	102	0	129	1	232	874
01:00 PM	1	56	21	0	78	1	2	0	0	3	27	58	1	0	86	17	3	28	0	48	215
01:15 PM	2	57	18	0	77	0	1	0	0	1	21	47	0	0	68	26	0	28	0	54	200
01:30 PM	1	55	16	0	72	0	1	0	0	1	30	48	2	0	80	24	0	24	0	48	201
01:45 PM	0	46	16	0	62	0	1	1	0	2	23	38	1	0	62	14	0	39	1	54	180
Total	4	214	71	0	289	1	5	1	0	7	101	191	4	0	296	81	3	119	1	204	796
02:00 PM	0	54	18	0	72	2	0	1	0	3	18	53	0	0	71	20	3	29	1	53	199
02:15 PM	0	51	23	0	74	1	0	0	0	1	21	42	0	0	63	32	2	25	2	61	199
02:30 PM	0	46	20	0	66	0	0	0	0	0	25	50	0	0	75	19	0	38	0	57	198
02:45 PM	0	43	19	0	62	0	1	0	0	1	21	54	0	0	75	25	1	34	0	60	198
Total	0	194	80	0	274	3	1	1	0	5	85	199	0	0	284	96	6	126	3	231	794
03:00 PM	0	43	13	0	56	0	0	1	0	1	23	98	0	0	121	21	1	33	2	57	235
03:15 PM	1	52	16	0	69	2	0	3	0	5	19	79	1	0	99	32	0	32	0	64	237
03:30 PM	3	101	37	0	141	1	2	1	0	4	23	72	2	0	97	30	1	30	0	61	303
03:45 PM	1	63	25	1	90	1	0	0	0	1	21	78	4	0	103	34	0	39	1	74	268
Total	5	259	91	1	356	4	2	5	0	11	86	327	7	0	420	117	2	134	3	256	1043
04:00 PM	0	72	27	0	99	0	0	0	0	0	37	68	1	0	106	27	0	37	2	66	271
04:15 PM	0	59	19	0	78	0	3	0	0	3	31	51	1	0	83	26	0	45	3	74	238
04:30 PM	0	77	30	0	107	2	0	1	0	3	39	65	1	0	105	24	1	38	4	67	282
04:45 PM	1	58	35	0	94	0	0	0	0	0	38	83	2	0	123	40	0	31	0	71	288
Total	1	266	111	0	378	2	3	1	0	6	145	267	5	0	417	117	1	151	9	278	1079
05:00 PM	1	62	30	0	93	2	1	0	0	3	46	114	1	0	161	34	1	43	2	80	337
05:15 PM	4	68	23	0	95	0	0	2	0	2	18	81	0	0	99	60	0	38	2	100	296
05:30 PM	6	66	29	0	101	1	2	1	0	4	28	66	1	0	95	34	3	38	0	75	275
05:45 PM	5	49	26	0	80	1	1	4	0	6	24	65	2	0	91	22	2	30	1	55	232
Total	16	245	108	0	369	4	4	7	0	15	116	326	4	0	446	150	6	149	5	310	1140

1st Ave S & S 32nd St
Fort Dodge Traffic Signal Improvements
Traffic Counts
Fort Dodge, Iowa

File Name : 421-1st S & S 32nd
Site Code : 1st Ave S & S 32nd St
Start Date : 10/21/2014
Page No : 2

Groups Printed- Lights - Mediums - Articulated Trucks - Bicycles on Road - Bicycles on Crosswalk - Pedestrians

	S 32nd St Southbound					1st Ave S Westbound					S 32nd St Northbound					1st Ave S Eastbound					
Start Time			Right	Peds	App. Total	Left	Thru	Right	Peds	App. Total	Left	Thru	Right	Peds	App. Total	Left	Thru	Right	Peds	App. Total	Int. Total
06:00 PM	0	0	0	0	0	0	0	0	0	0	0	0	0	0	0	0	0	0	0	0	0
Grand Total	35	2523	903	1	3462	21	27	20	0	68	1090	2435	35	0	3560	893	25	1231	25	2174	9264
Apprch %	1	72.9	26.1	0		30.9	39.7	29.4	0		30.6	68.4	1	0		41.1	1.1	56.6	1.1		
Total %	0.4	27.2	9.7	0	37.4	0.2	0.3	0.2	0	0.7	11.8	26.3	0.4	0	38.4	9.6	0.3	13.3	0.3	23.5	
Lights	35	2369	893	0	3297	20	24	20	0	64	1044	2288	33	0	3365	878	24	1175	0	2077	8803
% Lights	100	93.9	98.9	0	95.2	95.2	88.9	100	0	94.1	95.8	94	94.3	0	94.5	98.3	96	95.5	0	95.5	95
Mediums	0	99	7	0	106	0	3	0	0	3	28	88	2	0	118	14	1	28	0	43	270
% Mediums	0	3.9	0.8	0	3.1	0	11.1	0	0	4.4	2.6	3.6	5.7	0	3.3	1.6	4	2.3	0	2	2.9
Articulated Trucks	0	55	3	0	58	1	0	0	0	1	18	57	0	0	75	1	0	28	0	29	163
% Articulated Trucks	0	2.2	0.3	0	1.7	4.8	0	0	0	1.5	1.7	2.3	0	0	2.1	0.1	0	2.3	0	1.3	1.8
Bicycles on Road	0	0	0	0	0	0	0	0	0	0	0	2	0	0	2	0	0	0	0	0	2
% Bicycles on Road	0	0	0	0	0	0	0	0	0	0	0	0.1	0	0	0.1	0	0	0	0	0	0
Bicycles on Crosswalk	0	0	0	0	0	0	0	0	0	0	0	0	0	0	0	0	0	0	12	12	12
% Bicycles on Crosswalk	0	0	0	0	0	0	0	0	0	0	0	0	0	0	0	0	0	0	48	0.6	0.1
Pedestrians	0	0	0	1	1	0	0	0	0	0	0	0	0	0	0	0	0	0	13	13	14
% Pedestrians	0	0	0	100	0	0	0	0	0	0	0	0	0	0	0	0	0	0	52	0.6	0.2

1st Ave S & S 32nd St
Fort Dodge Traffic Signal Improvements
Traffic Counts
Fort Dodge, Iowa

File Name : 421-1st S & S 32nd
Site Code : 1st Ave S & S 32nd St
Start Date : 10/21/2014
Page No : 3

	S 32nd St Southbound					1st Ave S Westbound					S 32nd St Northbound					1st Ave S Eastbound					
Start Time	Left	Thru	Right	Peds	App. Total	Left	Thru	Right	Peds	App. Total	Left	Thru	Right	Peds	App. Total	Left	Thru	Right	Peds	App. Total	Int. Total
Peak Hour Analysis From 07:00 AM to 09:45 AM - Peak 1 of 1																					
Peak Hour for Entire Intersection Begins at 07:30 AM																					
07:30 AM	**1**	77	**30**	0	108	0	0	0	0	0	13	62	0	0	75	**9**	0	16	**1**	26	209
07:45 AM	0	**126**	23	0	**149**	0	0	0	0	0	**33**	**102**	**2**	0	**137**	7	0	15	0	22	**308**
08:00 AM	0	83	25	0	108	0	0	0	0	0	12	53	0	0	65	8	1	**20**	0	**29**	202
08:15 AM	1	56	13	0	70	0	0	0	0	0	21	49	2	0	72	5	**2**	19	0	26	168
Total Volume	2	342	91	0	435	0	0	0	0	0	79	266	4	0	349	29	3	70	1	103	887
% App. Total	0.5	78.6	20.9	0		0	0	0	0		22.6	76.2	1.1	0		28.2	2.9	68	1		
PHF	.500	.679	.758	.000	.730	.000	.000	.000	.000	.000	.598	.652	.500	.000	.637	.806	.375	.875	.250	.888	.720

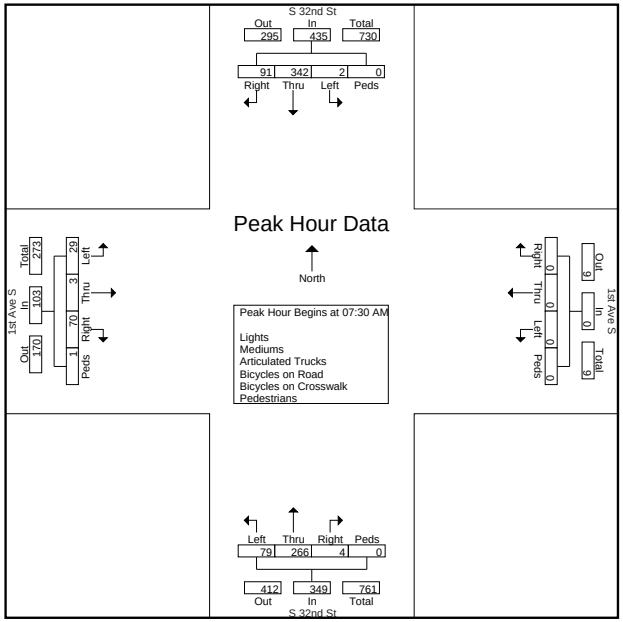

1st Ave S & S 32nd St
Fort Dodge Traffic Signal Improvements
Traffic Counts
Fort Dodge, Iowa

File Name : 421-1st S & S 32nd
Site Code : 1st Ave S & S 32nd St
Start Date : 10/21/2014
Page No : 4

	S 32nd St Southbound					1st Ave S Westbound					S 32nd St Northbound					1st Ave S Eastbound					
Start Time	Left	Thru	Right	Peds	App. Total	Left	Thru	Right	Peds	App. Total	Left	Thru	Right	Peds	App. Total	Left	Thru	Right	Peds	App. Total	Int. Total
Peak Hour Analysis From 10:00 AM to 01:45 PM - Peak 1 of 1																					
Peak Hour for Entire Intersection Begins at 11:45 AM																					
11:45 AM	**1**	52	**36**	0	**89**	**1**	**4**	0	0	**5**	25	**65**	**2**	0	92	19	0	**34**	0	53	**239**
12:00 PM	0	49	25	0	74	0	0	**2**	0	2	33	61	0	0	94	17	0	24	0	41	211
12:15 PM	0	**55**	16	0	71	1	0	1	0	2	36	40	2	0	78	**26**	0	29	0	55	206
12:30 PM	0	53	15	0	68	0	0	1	0	1	**43**	53	0	0	**96**	24	0	34	**1**	**59**	224
Total Volume	1	209	92	0	302	2	4	4	0	10	137	219	4	0	360	86	0	121	1	208	880
% App. Total	0.3	69.2	30.5	0		20	40	40	0		38.1	60.8	1.1	0		41.3	0	58.2	0.5		
PHF	.250	.950	.639	.000	.848	.500	.250	.500	.000	.500	.797	.842	.500	.000	.938	.827	.000	.890	.250	.881	.921

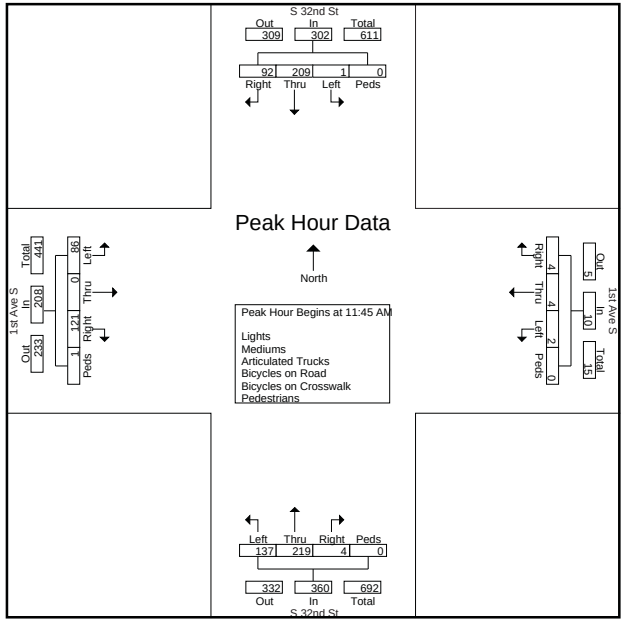

1st Ave S & S 32nd St
Fort Dodge Traffic Signal Improvements
Traffic Counts
Fort Dodge, Iowa

File Name : 421-1st S & S 32nd
Site Code : 1st Ave S & S 32nd St
Start Date : 10/21/2014
Page No : 5

	S 32nd St Southbound					1st Ave S Westbound					S 32nd St Northbound					1st Ave S Eastbound					
Start Time	Left	Thru	Right	Peds	App. Total	Left	Thru	Right	Peds	App. Total	Left	Thru	Right	Peds	App. Total	Left	Thru	Right	Peds	App. Total	Int. Total
Peak Hour Analysis From 02:00 PM to 06:00 PM - Peak 1 of 1																					
Peak Hour for Entire Intersection Begins at 04:30 PM																					
04:30 PM	0	**77**	30	0	**107**	**2**	0	1	0	**3**	39	65	1	0	105	24	**1**	38	**4**	67	282
04:45 PM	1	58	**35**	0	94	0	0	0	0	0	38	83	**2**	0	123	40	0	31	0	71	288
05:00 PM	1	62	30	0	93	2	**1**	0	0	3	**46**	**114**	1	0	**161**	34	1	**43**	2	80	**337**
05:15 PM	**4**	68	23	0	95	0	0	**2**	0	2	18	81	0	0	99	**60**	0	38	2	**100**	296
Total Volume	6	265	118	0	389	4	1	3	0	8	141	343	4	0	488	158	2	150	8	318	1203
% App. Total	1.5	68.1	30.3	0		50	12.5	37.5	0		28.9	70.3	0.8	0		49.7	0.6	47.2	2.5		
PHF	.375	.860	.843	.000	.909	.500	.250	.375	.000	.667	.766	.752	.500	.000	.758	.658	.500	.872	.500	.795	.892

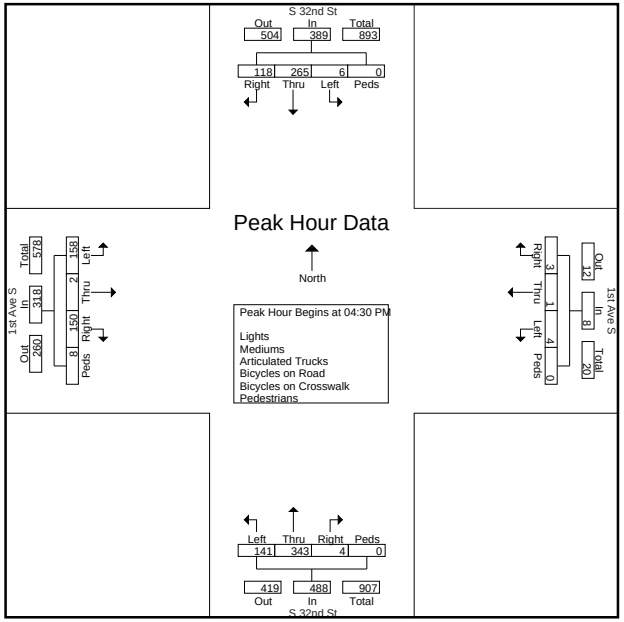

CLICK TO RETURN TO COUNT MAP

5th Ave S & S 12th St
Fort Dodge Traffic Signal Improvements
Traffic Counts
Fort Dodge, Iowa

File Name : 524-5th S & S 12th
Site Code : 5th Ave S & S 12th St
Start Date : 9/9/2014
Page No : 1

Groups Printed- Car - Truck

	S 12th St Southbound				5th Ave S Westbound				S 12th St Northbound				5th Ave S Eastbound				
Start Time	Left	Thru	Right	App. Total	Left	Thru	Right	App. Total	Left	Thru	Right	App. Total	Left	Thru	Right	App. Total	Int. Total
07:00 AM	27	0	8	35	0	71	11	82	1	0	1	2	3	72	0	75	194
07:15 AM	30	0	17	47	0	136	17	153	1	1	0	2	6	85	0	91	293
07:30 AM	33	0	18	51	0	167	22	189	2	4	2	8	14	132	1	147	395
07:45 AM	45	0	28	73	0	267	36	303	6	5	3	14	24	122	0	146	536
Total	135	0	71	206	0	641	86	727	10	10	6	26	47	411	1	459	1418
08:00 AM	40	0	21	61	0	184	38	222	4	2	0	6	16	115	1	132	421
08:15 AM	31	1	15	47	1	139	28	168	2	0	1	3	17	106	1	124	342
08:30 AM	33	3	10	46	0	138	19	157	5	0	1	6	9	88	0	97	306
08:45 AM	26	1	19	46	0	125	32	157	0	2	4	6	10	83	1	94	303
Total	130	5	65	200	1	586	117	704	11	4	6	21	52	392	3	447	1372
09:00 AM	0	0	0	0	0	0	1	1	0	0	0	0	0	0	0	0	1
Total	0	0	0	0	0	0	1	1	0	0	0	0	0	0	0	0	1
11:30 AM	49	2	13	64	0	101	18	119	0	0	1	1	20	178	2	200	384
11:45 AM	41	1	9	51	1	131	27	159	1	1	1	3	15	128	1	144	357
Total	90	3	22	115	1	232	45	278	1	1	2	4	35	306	3	344	741
12:00 PM	47	2	15	64	0	133	23	156	1	2	1	4	13	149	0	162	386
12:15 PM	55	2	14	71	1	125	38	164	1	1	1	3	13	123	0	136	374
12:30 PM	36	5	16	57	2	161	42	205	4	2	1	7	15	143	3	161	430
12:45 PM	38	2	19	59	0	166	40	206	0	7	1	8	11	134	1	146	419
Total	176	11	64	251	3	585	143	731	6	12	4	22	52	549	4	605	1609
01:00 PM	51	2	18	71	0	139	53	192	1	1	3	5	18	141	0	159	427
01:15 PM	49	0	18	67	0	174	41	215	3	4	0	7	14	124	0	138	427
01:30 PM	1	0	0	1	0	0	0	0	0	0	0	0	0	3	0	3	4
Total	101	2	36	139	0	313	94	407	4	5	3	12	32	268	0	300	858
03:00 PM	43	2	16	61	1	163	37	201	3	4	1	8	24	193	1	218	488
03:15 PM	44	3	14	61	0	154	37	191	0	2	2	4	25	189	3	217	473
03:30 PM	58	0	21	79	0	166	29	195	3	2	2	7	24	197	2	223	504
03:45 PM	47	2	22	71	0	178	36	214	2	3	2	7	31	157	1	189	481
Total	192	7	73	272	1	661	139	801	8	11	7	26	104	736	7	847	1946
04:00 PM	57	3	15	75	0	162	44	206	0	1	2	3	19	175	2	196	480
04:15 PM	47	3	20	70	0	137	32	169	0	4	1	5	19	139	0	158	402
04:30 PM	66	1	26	93	0	142	18	160	0	4	1	5	28	139	4	171	429
04:45 PM	41	2	22	65	1	155	19	175	0	4	1	5	23	155	2	180	425
Total	211	9	83	303	1	596	113	710	0	13	5	18	89	608	8	705	1736
05:00 PM	69	1	24	94	0	175	34	209	0	2	1	3	16	198	0	214	520
05:15 PM	51	2	20	73	1	174	36	211	1	2	3	6	22	163	0	185	475
05:30 PM	58	1	23	82	2	144	26	172	2	4	0	6	22	138	1	161	421
05:45 PM	36	3	20	59	0	125	25	150	4	3	0	7	8	123	0	131	347
Total	214	7	87	308	3	618	121	742	7	11	4	22	68	622	1	691	1763
Grand Total	1249	44	501	1794	10	4232	859	5101	47	67	37	151	479	3892	27	4398	11444
Apprch %	69.6	2.5	27.9		0.2	83	16.8		31.1	44.4	24.5		10.9	88.5	0.6		
Total %	10.9	0.4	4.4	15.7	0.1	37	7.5	44.6	0.4	0.6	0.3	1.3	4.2	34	0.2	38.4	
Car	1232	42	488	1762	10	4029	841	4880	47	64	36	147	476	3701	26	4203	10992
% Car	98.6	95.5	97.4	98.2	100	95.2	97.9	95.7	100	95.5	97.3	97.4	99.4	95.1	96.3	95.6	96.1
Truck	17	2	13	32	0	203	18	221	0	3	1	4	3	191	1	195	452
% Truck	1.4	4.5	2.6	1.8	0	4.8	2.1	4.3	0	4.5	2.7	2.6	0.6	4.9	3.7	4.4	3.9

5th Ave S & S 12th St
Fort Dodge Traffic Signal Improvements
Traffic Counts
Fort Dodge, Iowa

File Name : 524-5th S & S 12th
Site Code : 5th Ave S & S 12th St
Start Date : 9/9/2014
Page No : 2

	S 12th St Southbound				5th Ave S Westbound				S 12th St Northbound				5th Ave S Eastbound				
Start Time	Left	Thru	Right	App. Total	Left	Thru	Right	App. Total	Left	Thru	Right	App. Total	Left	Thru	Right	App. Total	Int. Total
Peak Hour Analysis From 07:00 AM to 09:45 AM - Peak 1 of 1																	
Peak Hour for Entire Intersection Begins at 07:30 AM																	
07:30 AM	33	0	18	51	0	167	22	189	2	4	2	8	14	**132**	**1**	**147**	395
07:45 AM	**45**	0	**28**	**73**	0	**267**	36	**303**	**6**	**5**	**3**	**14**	**24**	122	0	146	**536**
08:00 AM	40	0	21	61	0	184	**38**	222	4	2	0	6	16	115	1	132	421
08:15 AM	31	**1**	15	47	**1**	139	28	168	2	0	1	3	17	106	1	124	342
Total Volume	149	1	82	232	1	757	124	882	14	11	6	31	71	475	3	549	1694
% App. Total	64.2	0.4	35.3		0.1	85.8	14.1		45.2	35.5	19.4		12.9	86.5	0.5		
PHF	.828	.250	.732	.795	.250	.709	.816	.728	.583	.550	.500	.554	.740	.900	.750	.934	.790

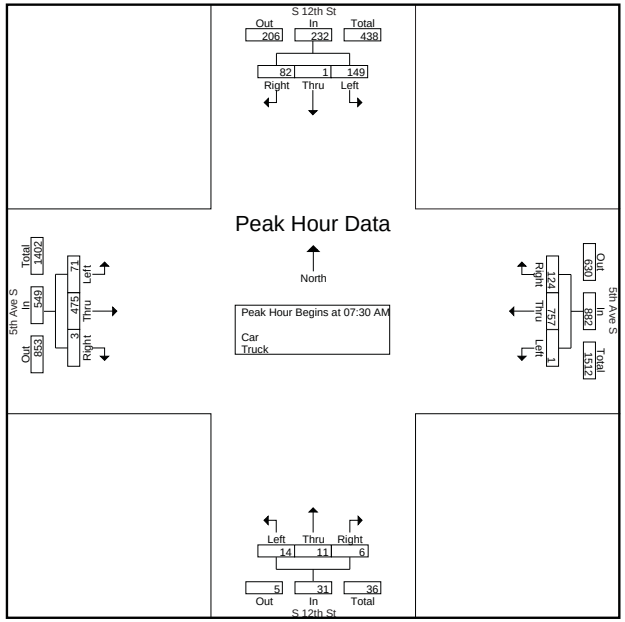

5th Ave S & S 12th St
Fort Dodge Traffic Signal Improvements
Traffic Counts
Fort Dodge, Iowa

File Name : 524-5th S & S 12th
Site Code : 5th Ave S & S 12th St
Start Date : 9/9/2014
Page No : 3

	S 12th St Southbound				5th Ave S Westbound				S 12th St Northbound				5th Ave S Eastbound				
Start Time	Left	Thru	Right	App. Total	Left	Thru	Right	App. Total	Left	Thru	Right	App. Total	Left	Thru	Right	App. Total	Int. Total
Peak Hour Analysis From 10:00 AM to 01:45 PM - Peak 1 of 1																	
Peak Hour for Entire Intersection Begins at 12:30 PM																	
12:30 PM	36	**5**	16	57	**2**	161	42	205	**4**	2	1	7	15	**143**	**3**	**161**	**430**
12:45 PM	38	2	**19**	59	0	166	40	206	0	**7**	1	**8**	11	134	1	146	419
01:00 PM	**51**	2	18	**71**	0	139	**53**	192	1	1	**3**	5	**18**	141	0	159	427
01:15 PM	49	0	18	67	0	**174**	41	**215**	3	4	0	7	14	124	0	138	427
Total Volume	174	9	71	254	2	640	176	818	8	14	5	27	58	542	4	604	1703
% App. Total	68.5	3.5	28		0.2	78.2	21.5		29.6	51.9	18.5		9.6	89.7	0.7		
PHF	.853	.450	.934	.894	.250	.920	.830	.951	.500	.500	.417	.844	.806	.948	.333	.938	.990

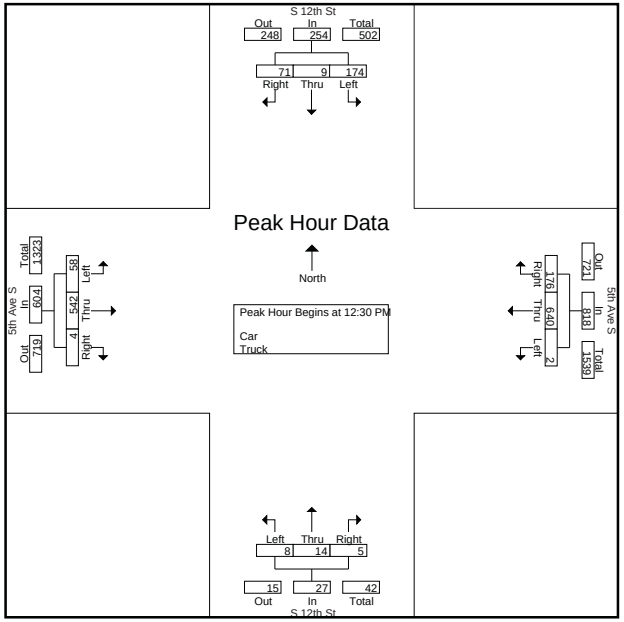

5th Ave S & S 12th St
Fort Dodge Traffic Signal Improvements
Traffic Counts
Fort Dodge, Iowa

File Name : 524-5th S & S 12th
Site Code : 5th Ave S & S 12th St
Start Date : 9/9/2014
Page No : 4

	S 12th St Southbound				5th Ave S Westbound				S 12th St Northbound				5th Ave S Eastbound				
Start Time	Left	Thru	Right	App. Total	Left	Thru	Right	App. Total	Left	Thru	Right	App. Total	Left	Thru	Right	App. Total	Int. Total
Peak Hour Analysis From 02:00 PM to 05:45 PM - Peak 1 of 1																	
Peak Hour for Entire Intersection Begins at 03:00 PM																	
03:00 PM	43	2	16	61	**1**	163	**37**	201	**3**	**4**	1	**8**	24	193	1	218	488
03:15 PM	44	**3**	14	61	0	154	37	191	0	2	**2**	4	25	189	**3**	217	473
03:30 PM	**58**	0	21	**79**	0	166	29	195	3	2	2	7	24	**197**	2	**223**	**504**
03:45 PM	47	2	**22**	71	0	**178**	36	**214**	2	3	2	7	**31**	157	1	189	481
Total Volume	192	7	73	272	1	661	139	801	8	11	7	26	104	736	7	847	1946
% App. Total	70.6	2.6	26.8		0.1	82.5	17.4		30.8	42.3	26.9		12.3	86.9	0.8		
PHF	.828	.583	.830	.861	.250	.928	.939	.936	.667	.688	.875	.813	.839	.934	.583	.950	.965

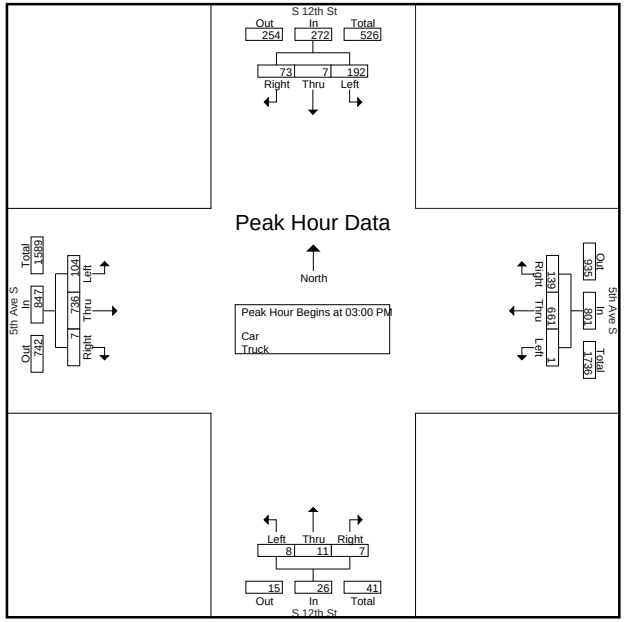

CLICK TO RETURN TO COUNT MAP

5th Ave S & S 15th St
Fort Dodge Traffic Signal Improvements
Traffic Counts
Fort Dodge, Iowa

File Name : 525-5th S & S 15th
Site Code : 5th Ave S & S 15th St
Start Date : 9/8/2014
Page No : 1

Groups Printed- Car - Truck

	S 15th St Southbound				5th Ave S Westbound				S 15th St Northbound				5th Ave S Eastbound				
Start Time	Left	Thru	Right	App. Total	Left	Thru	Right	App. Total	Left	Thru	Right	App. Total	Left	Thru	Right	App. Total	Int. Total
07:00 AM	11	4	24	39	4	70	8	82	5	7	2	14	5	67	4	76	211
07:15 AM	16	10	32	58	3	98	16	117	15	9	3	27	12	94	3	109	311
07:30 AM	32	22	46	100	8	150	20	178	11	20	5	36	43	125	14	182	496
07:45 AM	33	23	55	111	9	197	19	225	24	16	14	54	32	144	10	186	576
Total	92	59	157	308	24	515	63	602	55	52	24	131	92	430	31	553	1594
08:00 AM	22	13	39	74	10	145	31	186	19	12	9	40	24	95	13	132	432
08:15 AM	27	3	38	68	4	118	11	133	7	15	5	27	25	104	8	137	365
08:30 AM	30	8	38	76	9	130	28	167	10	6	3	19	12	89	6	107	369
08:45 AM	22	8	31	61	9	126	20	155	13	6	8	27	22	104	6	132	375
Total	101	32	146	279	32	519	90	641	49	39	25	113	83	392	33	508	1541
09:00 AM	0	0	0	0	0	0	0	0	0	0	0	0	0	1	0	1	1
Total	0	0	0	0	0	0	0	0	0	0	0	0	0	1	0	1	1
11:30 AM	41	9	14	64	5	118	25	148	8	8	9	25	16	158	8	182	419
11:45 AM	40	11	22	73	9	152	31	192	12	10	11	33	24	139	6	169	467
Total	81	20	36	137	14	270	56	340	20	18	20	58	40	297	14	351	886
12:00 PM	38	8	18	64	10	140	30	180	4	16	17	37	20	195	6	221	502
12:15 PM	42	11	27	80	7	180	25	212	7	10	7	24	13	156	9	178	494
12:30 PM	39	13	20	72	12	162	38	212	11	8	7	26	28	167	11	206	516
12:45 PM	35	7	23	65	4	178	37	219	7	7	11	25	20	161	3	184	493
Total	154	39	88	281	33	660	130	823	29	41	42	112	81	679	29	789	2005
01:00 PM	38	8	17	63	5	148	19	172	6	12	4	22	21	157	4	182	439
01:15 PM	24	12	24	60	7	180	31	218	13	10	6	29	17	133	9	159	466
Total	62	20	41	123	12	328	50	390	19	22	10	51	38	290	13	341	905
03:00 PM	47	24	26	97	13	170	28	211	14	21	6	41	38	200	14	252	601
03:15 PM	32	15	30	77	8	135	39	182	16	16	8	40	40	171	11	222	521
03:30 PM	42	19	26	87	21	188	46	255	10	17	6	33	38	205	11	254	629
03:45 PM	34	21	28	83	14	184	44	242	8	15	9	32	30	167	11	208	565
Total	155	79	110	344	56	677	157	890	48	69	29	146	146	743	47	936	2316
04:00 PM	33	8	19	60	16	171	30	217	5	11	12	28	26	182	14	222	527
04:15 PM	39	7	18	64	17	157	30	204	10	14	9	33	23	170	7	200	501
04:30 PM	35	10	16	61	7	140	36	183	4	18	12	34	28	193	10	231	509
04:45 PM	45	12	26	83	14	161	20	195	9	17	7	33	28	187	10	225	536
Total	152	37	79	268	54	629	116	799	28	60	40	128	105	732	41	878	2073
05:00 PM	44	21	27	92	2	182	37	221	8	15	4	27	43	178	11	232	572
05:15 PM	31	11	16	58	11	196	32	239	13	19	13	45	24	154	6	184	526
05:30 PM	30	15	20	65	7	161	28	196	7	5	9	21	22	139	10	171	453
05:45 PM	31	16	15	62	10	135	34	179	9	21	3	33	16	131	8	155	429
Total	136	63	78	277	30	674	131	835	37	60	29	126	105	602	35	742	1980
Grand Total	933	349	735	2017	255	4272	793	5320	285	361	219	865	690	4166	243	5099	13301
Apprch %	46.3	17.3	36.4		4.8	80.3	14.9		32.9	41.7	25.3		13.5	81.7	4.8		
Total %	7	2.6	5.5	15.2	1.9	32.1	6	40	2.1	2.7	1.6	6.5	5.2	31.3	1.8	38.3	
Car	913	348	715	1976	253	4089	762	5104	275	350	217	842	672	4025	241	4938	12860
% Car	97.9	99.7	97.3	98	99.2	95.7	96.1	95.9	96.5	97	99.1	97.3	97.4	96.6	99.2	96.8	96.7
Truck	20	1	20	41	2	183	31	216	10	11	2	23	18	141	2	161	441
% Truck	2.1	0.3	2.7	2	0.8	4.3	3.9	4.1	3.5	3	0.9	2.7	2.6	3.4	0.8	3.2	3.3

5th Ave S & S 15th St
Fort Dodge Traffic Signal Improvements
Traffic Counts
Fort Dodge, Iowa

File Name : 525-5th S & S 15th
Site Code : 5th Ave S & S 15th St
Start Date : 9/8/2014
Page No : 2

	S 15th St Southbound				5th Ave S Westbound				S 15th St Northbound				5th Ave S Eastbound				
Start Time	Left	Thru	Right	App. Total	Left	Thru	Right	App. Total	Left	Thru	Right	App. Total	Left	Thru	Right	App. Total	Int. Total
Peak Hour Analysis From 07:00 AM to 09:45 AM - Peak 1 of 1																	
Peak Hour for Entire Intersection Begins at 07:30 AM																	
07:30 AM	32	22	46	100	8	150	20	178	11	**20**	5	36	**43**	125	**14**	182	496
07:45 AM	**33**	**23**	**55**	**111**	9	**197**	19	**225**	**24**	16	**14**	**54**	32	**144**	10	**186**	**576**
08:00 AM	22	13	39	74	**10**	145	**31**	186	19	12	9	40	24	95	13	132	432
08:15 AM	27	3	38	68	4	118	11	133	7	15	5	27	25	104	8	137	365
Total Volume	114	61	178	353	31	610	81	722	61	63	33	157	124	468	45	637	1869
% App. Total	32.3	17.3	50.4		4.3	84.5	11.2		38.9	40.1	21		19.5	73.5	7.1		
PHF	.864	.663	.809	.795	.775	.774	.653	.802	.635	.788	.589	.727	.721	.813	.804	.856	.811

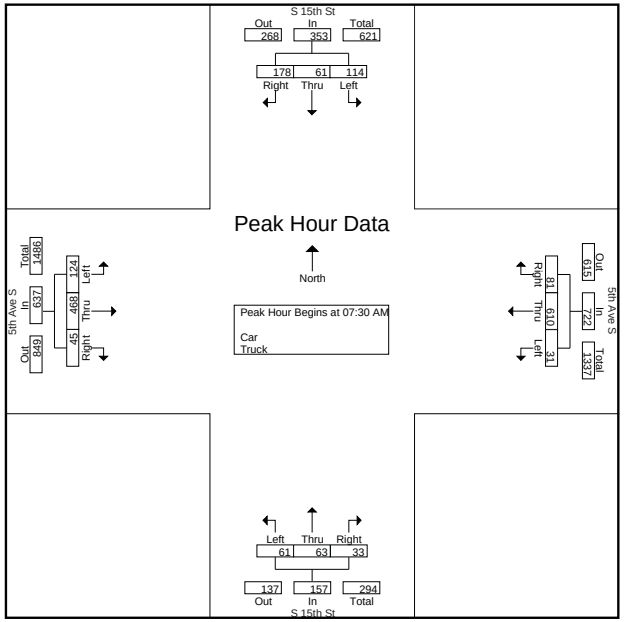

5th Ave S & S 15th St
Fort Dodge Traffic Signal Improvements
Traffic Counts
Fort Dodge, Iowa

File Name : 525-5th S & S 15th
Site Code : 5th Ave S & S 15th St
Start Date : 9/8/2014
Page No : 3

	S 15th St Southbound				5th Ave S Westbound				S 15th St Northbound				5th Ave S Eastbound				
Start Time	Left	Thru	Right	App. Total	Left	Thru	Right	App. Total	Left	Thru	Right	App. Total	Left	Thru	Right	App. Total	Int. Total
Peak Hour Analysis From 10:00 AM to 01:45 PM - Peak 1 of 1																	
Peak Hour for Entire Intersection Begins at 12:00 PM																	
12:00 PM	38	8	18	64	10	140	30	180	4	**16**	**17**	**37**	20	**195**	6	**221**	502
12:15 PM	**42**	11	**27**	**80**	7	**180**	25	212	7	10	7	24	13	156	9	178	494
12:30 PM	39	**13**	20	72	**12**	162	**38**	212	**11**	8	7	26	**28**	167	**11**	206	**516**
12:45 PM	35	7	23	65	4	178	37	**219**	7	7	11	25	20	161	3	184	493
Total Volume	154	39	88	281	33	660	130	823	29	41	42	112	81	679	29	789	2005
% App. Total	54.8	13.9	31.3		4	80.2	15.8		25.9	36.6	37.5		10.3	86.1	3.7		
PHF	.917	.750	.815	.878	.688	.917	.855	.939	.659	.641	.618	.757	.723	.871	.659	.893	.971

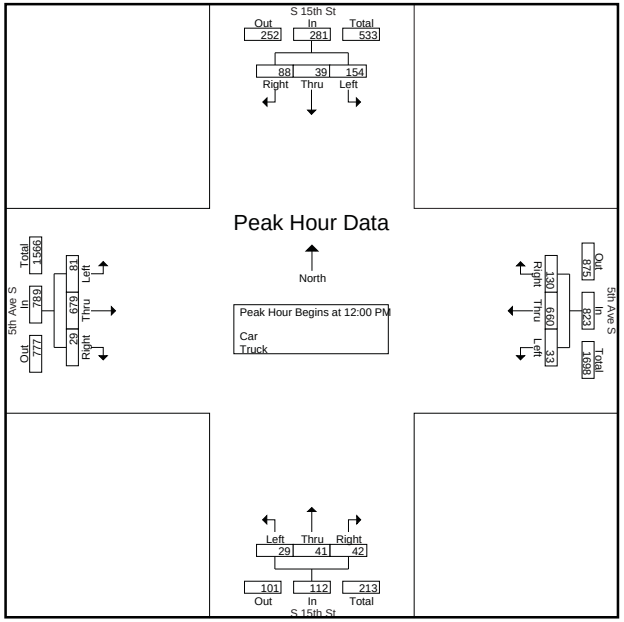

5th Ave S & S 15th St
Fort Dodge Traffic Signal Improvements
Traffic Counts
Fort Dodge, Iowa

File Name : 525-5th S & S 15th
Site Code : 5th Ave S & S 15th St
Start Date : 9/8/2014
Page No : 4

	S 15th St Southbound				5th Ave S Westbound				S 15th St Northbound				5th Ave S Eastbound				
Start Time	Left	Thru	Right	App. Total	Left	Thru	Right	App. Total	Left	Thru	Right	App. Total	Left	Thru	Right	App. Total	Int. Total
Peak Hour Analysis From 02:00 PM to 05:45 PM - Peak 1 of 1																	
Peak Hour for Entire Intersection Begins at 03:00 PM																	
03:00 PM	**47**	**24**	26	**97**	13	170	28	211	14	**21**	6	**41**	38	200	**14**	252	601
03:15 PM	32	15	**30**	77	8	135	39	182	**16**	16	8	40	**40**	171	11	222	521
03:30 PM	42	19	26	87	**21**	**188**	**46**	**255**	10	17	6	33	38	**205**	11	**254**	**629**
03:45 PM	34	21	28	83	14	184	44	242	8	15	**9**	32	30	167	11	208	565
Total Volume	155	79	110	344	56	677	157	890	48	69	29	146	146	743	47	936	2316
% App. Total	45.1	23	32		6.3	76.1	17.6		32.9	47.3	19.9		15.6	79.4	5		
PHF	.824	.823	.917	.887	.667	.900	.853	.873	.750	.821	.806	.890	.913	.906	.839	.921	.921

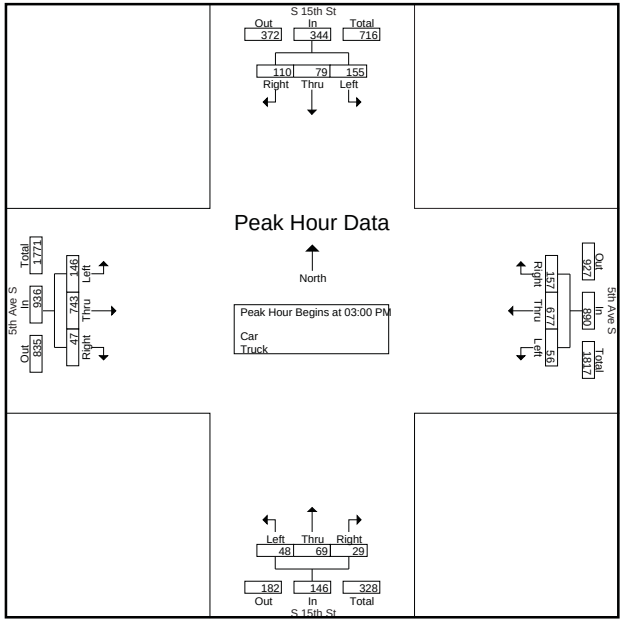

CLICK TO RETURN TO COUNT MAP

5th Ave S & S 17th St
Fort Dodge Traffic Signal Improvements
Traffic Counts
Fort Dodge, Iowa

File Name : 526-5th S & S 17th
Site Code : 00000000
Start Date : 9/8/2014
Page No : 1

Groups Printed- Car - Truck

	S 17TH ST Southbound					5TH AVE S Westbound					S 17TH ST Northbound					5TH AVE S Eastbound					
Start Time			Right	Peds	App. Total	Left	Thru	Right	Peds	App. Total	Left	Thru	Right	Peds	App. Total	Left	Thru	Right	Peds	App. Total	Int. Total
06:45 AM	6	2	1	0	9	5	63	0	0	68	9	1	6	0	16	1	84	5	0	90	183
Total	6	2	1	0	9	5	63	0	0	68	9	1	6	0	16	1	84	5	0	90	183
07:00 AM	1	1	0	0	2	2	86	1	0	89	16	3	1	0	20	0	81	5	0	86	197
07:15 AM	6	3	0	0	9	2	121	3	0	126	11	2	5	0	18	0	103	7	0	110	263
07:30 AM	4	9	3	0	16	22	183	2	0	207	19	7	6	0	32	2	177	5	0	184	439
07:45 AM	5	5	1	0	11	1	183	8	0	192	36	8	5	0	49	5	138	10	0	153	405
Total	16	18	4	0	38	27	573	14	0	614	82	20	17	0	119	7	499	27	0	533	1304
08:00 AM	7	5	1	0	13	7	144	6	0	157	22	3	6	0	31	3	97	5	0	105	306
Total	7	5	1	0	13	7	144	6	0	157	22	3	6	0	31	3	97	5	0	105	306
11:45 AM	11	2	2	0	15	2	183	7	0	192	12	3	7	0	22	1	186	2	0	189	418
Total	11	2	2	0	15	2	183	7	0	192	12	3	7	0	22	1	186	2	0	189	418
12:00 PM	8	3	4	0	15	4	184	7	0	195	10	1	7	0	18	4	240	6	0	250	478
12:15 PM	15	6	3	0	24	5	202	9	0	216	11	5	8	1	25	4	220	3	0	227	492
12:30 PM	7	1	1	0	9	4	195	22	0	221	21	2	7	0	30	1	219	4	0	224	484
12:45 PM	10	3	1	0	14	6	183	11	0	200	10	1	2	0	13	3	185	4	0	192	419
Total	40	13	9	0	62	19	764	49	0	832	52	9	24	1	86	12	864	17	0	893	1873
01:00 PM	16	5	8	0	29	9	156	5	0	170	7	7	13	0	27	5	175	6	0	186	412
Total	16	5	8	0	29	9	156	5	0	170	7	7	13	0	27	5	175	6	0	186	412
04:00 PM	15	2	2	0	19	5	221	6	0	232	20	6	8	0	34	4	201	6	0	211	496
04:15 PM	19	2	2	0	23	8	209	6	0	223	19	5	4	0	28	3	208	15	0	226	500
04:30 PM	15	5	1	0	21	1	195	2	0	198	9	7	3	0	19	3	204	7	0	214	452
04:45 PM	7	5	1	0	13	10	169	6	0	185	12	6	2	0	20	0	213	14	0	227	445
Total	56	14	6	0	76	24	794	20	0	838	60	24	17	0	101	10	826	42	0	878	1893
05:00 PM	17	7	3	0	27	5	185	4	0	194	14	5	7	0	26	5	173	11	0	189	436
05:15 PM	17	8	3	0	28	7	181	3	0	191	28	4	7	0	39	2	194	13	0	209	467
05:30 PM	6	8	2	0	16	20	151	1	0	172	9	3	2	0	14	2	144	7	0	153	355
05:45 PM	14	7	1	0	22	9	202	5	0	216	19	4	6	0	29	2	120	7	0	129	396
Total	54	30	9	0	93	41	719	13	0	773	70	16	22	0	108	11	631	38	0	680	1654
Grand Total	206	89	40	0	335	134	3396	114	0	3644	314	83	112	1	510	50	3362	142	0	3554	8043
Apprch %	61.5	26.6	11.9	0		3.7	93.2	3.1	0		61.6	16.3	22	0.2		1.4	94.6	4	0		
Total %	2.6	1.1	0.5	0	4.2	1.7	42.2	1.4	0	45.3	3.9	1	1.4	0	6.3	0.6	41.8	1.8	0	44.2	
Car	206	89	40	0	335	134	3307	114	0	3555	310	83	112	1	506	49	3291	142	0	3482	7878
% Car	100	100	100	0	100	100	97.4	100	0	97.6	98.7	100	100	100	99.2	98	97.9	100	0	98	97.9
Truck	0	0	0	0	0	0	89	0	0	89	4	0	0	0	4	1	71	0	0	72	165
% Truck	0	0	0	0	0	0	2.6	0	0	2.4	1.3	0	0	0	0.8	2	2.1	0	0	2	2.1

5th Ave S & S 17th St
Fort Dodge Traffic Signal Improvements
Traffic Counts
Fort Dodge, Iowa

File Name : 526-5th S & S 17th
Site Code : 00000000
Start Date : 9/8/2014
Page No : 2

	S 17TH ST Southbound					5TH AVE S Westbound					S 17TH ST Northbound					5TH AVE S Eastbound					
Start Time	Left	Thru	Right	Peds	App. Total	Left	Thru	Right	Peds	App. Total	Left	Thru	Right	Peds	App. Total	Left	Thru	Right	Peds	App. Total	Int. Total
Peak Hour Analysis From 06:45 AM to 09:45 AM - Peak 1 of 1																					
Peak Hour for Entire Intersection Begins at 07:15 AM																					
07:15 AM	6	3	0	0	9	2	121	3	0	126	11	2	5	0	18	0	103	7	0	110	263
07:30 AM	4	**9**	**3**	0	**16**	**22**	**183**	2	0	**207**	19	7	**6**	0	32	2	**177**	5	0	**184**	**439**
07:45 AM	5	5	1	0	11	1	183	**8**	0	192	**36**	**8**	5	0	**49**	**5**	138	**10**	0	153	405
08:00 AM	**7**	5	1	0	13	7	144	6	0	157	22	3	6	0	31	3	97	5	0	105	306
Total Volume	22	22	5	0	49	32	631	19	0	682	88	20	22	0	130	10	515	27	0	552	1413
% App. Total	44.9	44.9	10.2	0		4.7	92.5	2.8	0		67.7	15.4	16.9	0		1.8	93.3	4.9	0		
PHF	.786	.611	.417	.000	.766	.364	.862	.594	.000	.824	.611	.625	.917	.000	.663	.500	.727	.675	.000	.750	.805

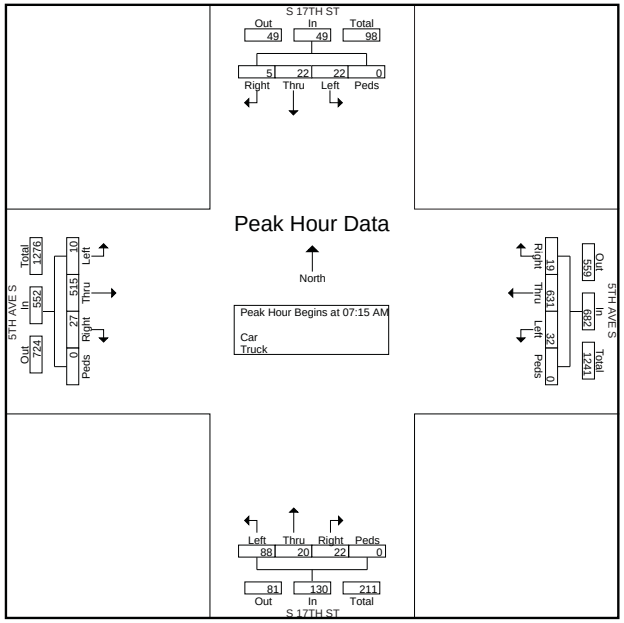

5th Ave S & S 17th St
Fort Dodge Traffic Signal Improvements
Traffic Counts
Fort Dodge, Iowa

File Name : 526-5th S & S 17th
Site Code : 00000000
Start Date : 9/8/2014
Page No : 3

	S 17TH ST Southbound					5TH AVE S Westbound					S 17TH ST Northbound					5TH AVE S Eastbound					
Start Time	Left	Thru	Right	Peds	App. Total	Left	Thru	Right	Peds	App. Total	Left	Thru	Right	Peds	App. Total	Left	Thru	Right	Peds	App. Total	Int. Total
Peak Hour Analysis From 10:00 AM to 01:45 PM - Peak 1 of 1																					
Peak Hour for Entire Intersection Begins at 12:00 PM																					
12:00 PM	8	3	**4**	0	15	4	184	7	0	195	10	1	7	0	18	**4**	**240**	**6**	0	**250**	478
12:15 PM	**15**	**6**	3	0	**24**	5	**202**	9	0	216	11	**5**	**8**	**1**	25	4	220	3	0	227	**492**
12:30 PM	7	1	1	0	9	4	195	**22**	0	**221**	**21**	2	7	0	**30**	1	219	4	0	224	484
12:45 PM	10	3	1	0	14	**6**	183	11	0	200	10	1	2	0	13	3	185	4	0	192	419
Total Volume	40	13	9	0	62	19	764	49	0	832	52	9	24	1	86	12	864	17	0	893	1873
% App. Total	64.5	21	14.5	0		2.3	91.8	5.9	0		60.5	10.5	27.9	1.2		1.3	96.8	1.9	0		
PHF	.667	.542	.563	.000	.646	.792	.946	.557	.000	.941	.619	.450	.750	.250	.717	.750	.900	.708	.000	.893	.952

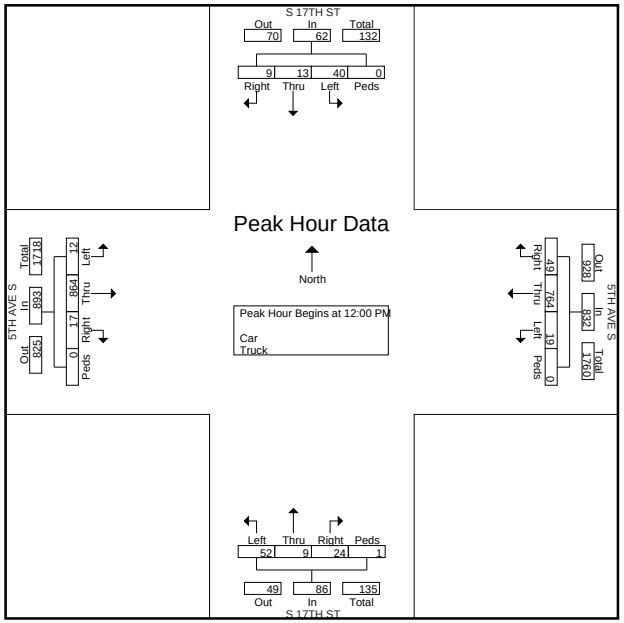

5th Ave S & S 17th St
Fort Dodge Traffic Signal Improvements
Traffic Counts
Fort Dodge, Iowa

File Name : 526-5th S & S 17th
Site Code : 00000000
Start Date : 9/8/2014
Page No : 4

	S 17TH ST Southbound					5TH AVE S Westbound					S 17TH ST Northbound					5TH AVE S Eastbound					
Start Time	Left	Thru	Right	Peds	App. Total	Left	Thru	Right	Peds	App. Total	Left	Thru	Right	Peds	App. Total	Left	Thru	Right	Peds	App. Total	Int. Total
Peak Hour Analysis From 02:00 PM to 05:45 PM - Peak 1 of 1																					
Peak Hour for Entire Intersection Begins at 04:00 PM																					
04:00 PM	15	2	**2**	0	19	5	**221**	**6**	0	**232**	**20**	6	**8**	0	**34**	**4**	201	6	0	211	496
04:15 PM	**19**	2	2	0	**23**	8	209	6	0	223	19	5	4	0	28	3	208	**15**	0	226	**500**
04:30 PM	15	**5**	1	0	21	1	195	2	0	198	9	**7**	3	0	19	3	204	7	0	214	452
04:45 PM	7	5	1	0	13	**10**	169	6	0	185	12	6	2	0	20	0	**213**	14	0	**227**	445
Total Volume	56	14	6	0	76	24	794	20	0	838	60	24	17	0	101	10	826	42	0	878	1893
% App. Total	73.7	18.4	7.9	0		2.9	94.7	2.4	0		59.4	23.8	16.8	0		1.1	94.1	4.8	0		
PHF	.737	.700	.750	.000	.826	.600	.898	.833	.000	.903	.750	.857	.531	.000	.743	.625	.969	.700	.000	.967	.947

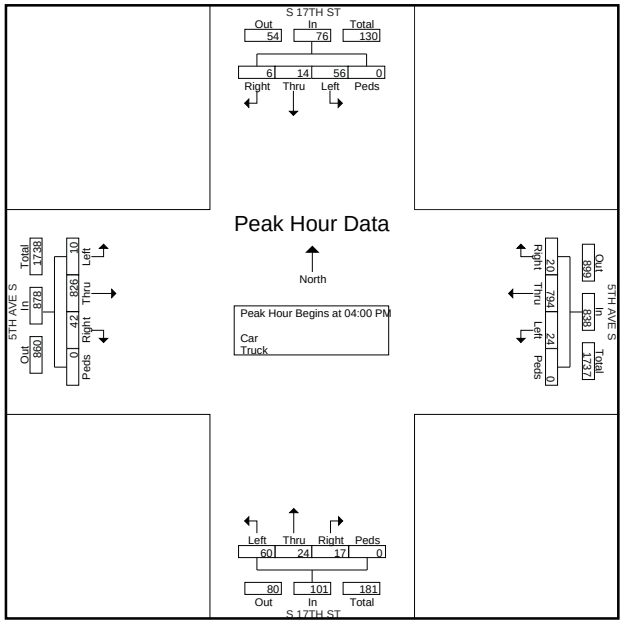

CLICK TO RETURN TO COUNT MAP

5th Ave S & S 21st St
Fort Dodge Traffic Signal Improvements
Traffic Counts
Fort Dodge, Iowa

File Name : 527-5th S & S 21st
Site Code : 5th Ave S & S 21st St
Start Date : 9/8/2014
Page No : 1

Groups Printed- Car - Truck

	S 21st St Southbound				5th Ave S Westbound				S 21st St Northbound				5th Ave S Eastbound				
Start Time	Left	Thru	Right	App. Total	Left	Thru	Right	App. Total	Left	Thru	Right	App. Total	Left	Thru	Right	App. Total	Int. Total
07:00 AM	8	25	19	52	2	46	6	54	10	13	0	23	8	63	10	81	210
07:15 AM	15	27	29	71	5	49	11	65	27	30	3	60	14	76	11	101	297
07:30 AM	13	27	46	86	8	79	15	102	25	55	3	83	31	101	28	160	431
07:45 AM	19	35	46	100	12	118	20	150	51	59	5	115	23	129	21	173	538
Total	55	114	140	309	27	292	52	371	113	157	11	281	76	369	70	515	1476
08:00 AM	21	30	27	78	6	98	14	118	26	39	10	75	17	94	21	132	403
08:15 AM	11	26	19	56	5	72	11	88	20	19	5	44	13	95	9	117	305
08:30 AM	25	16	19	60	4	106	23	133	21	24	5	50	9	103	18	130	373
08:45 AM	15	19	13	47	1	101	14	116	20	22	3	45	13	132	12	157	365
Total	72	91	78	241	16	377	62	455	87	104	23	214	52	424	60	536	1446
11:30 AM	33	26	9	68	7	130	20	157	23	15	8	46	13	193	26	232	503
11:45 AM	36	14	11	61	16	153	15	184	30	27	8	65	5	182	22	209	519
Total	69	40	20	129	23	283	35	341	53	42	16	111	18	375	48	441	1022
12:00 PM	44	36	8	88	10	158	29	197	19	27	20	66	22	216	23	261	612
12:15 PM	27	13	18	58	7	170	23	200	24	21	14	59	14	193	25	232	549
12:30 PM	44	23	16	83	10	182	12	204	18	15	9	42	21	171	30	222	551
12:45 PM	31	17	17	65	8	181	22	211	31	26	15	72	17	182	17	216	564
Total	146	89	59	294	35	691	86	812	92	89	58	239	74	762	95	931	2276
01:00 PM	19	22	17	58	5	128	16	149	31	17	5	53	11	148	24	183	443
01:15 PM	19	20	16	55	11	175	21	207	30	27	10	67	10	164	26	200	529
Total	38	42	33	113	16	303	37	356	61	44	15	120	21	312	50	383	972
03:00 PM	22	26	18	66	7	164	19	190	28	28	11	67	15	196	37	248	571
03:15 PM	23	30	20	73	8	133	28	169	25	53	13	91	27	154	39	220	553
03:30 PM	25	46	28	99	12	209	22	243	29	52	11	92	14	161	20	195	629
03:45 PM	26	40	16	82	13	213	25	251	27	33	13	73	13	207	29	249	655
Total	96	142	82	320	40	719	94	853	109	166	48	323	69	718	125	912	2408
04:00 PM	27	37	21	85	12	167	32	211	30	44	7	81	15	183	28	226	603
04:15 PM	29	23	14	66	6	166	14	186	28	33	5	66	18	178	25	221	539
04:30 PM	28	41	12	81	10	145	17	172	29	30	7	66	21	171	23	215	534
04:45 PM	36	40	18	94	11	143	16	170	27	33	9	69	22	200	32	254	587
Total	120	141	65	326	39	621	79	739	114	140	28	282	76	732	108	916	2263
Grand Total	596	659	477	1732	196	3286	445	3927	629	742	199	1570	386	3692	556	4634	11863
Apprch %	34.4	38	27.5		5	83.7	11.3		40.1	47.3	12.7		8.3	79.7	12		
Total %	5	5.6	4	14.6	1.7	27.7	3.8	33.1	5.3	6.3	1.7	13.2	3.3	31.1	4.7	39.1	
Car	584	632	466	1682	183	3131	431	3745	579	721	190	1490	383	3574	519	4476	11393
% Car	98	95.9	97.7	97.1	93.4	95.3	96.9	95.4	92.1	97.2	95.5	94.9	99.2	96.8	93.3	96.6	96
Truck	12	27	11	50	13	155	14	182	50	21	9	80	3	118	37	158	470
% Truck	2	4.1	2.3	2.9	6.6	4.7	3.1	4.6	7.9	2.8	4.5	5.1	0.8	3.2	6.7	3.4	4

5th Ave S & S 21st St
Fort Dodge Traffic Signal Improvements
Traffic Counts
Fort Dodge, Iowa

File Name : 527-5th S & S 21st
Site Code : 5th Ave S & S 21st St
Start Date : 9/8/2014
Page No : 2

	S 21st St Southbound				5th Ave S Westbound				S 21st St Northbound				5th Ave S Eastbound				
Start Time	Left	Thru	Right	App. Total	Left	Thru	Right	App. Total	Left	Thru	Right	App. Total	Left	Thru	Right	App. Total	Int. Total
Peak Hour Analysis From 07:00 AM to 09:45 AM - Peak 1 of 1																	
Peak Hour for Entire Intersection Begins at 07:30 AM																	
07:30 AM	13	27	**46**	86	8	79	15	102	25	55	3	83	**31**	101	**28**	160	431
07:45 AM	19	**35**	46	**100**	**12**	**118**	**20**	**150**	**51**	**59**	5	**115**	23	**129**	21	**173**	**538**
08:00 AM	**21**	30	27	78	6	98	14	118	26	39	**10**	75	17	94	21	132	403
08:15 AM	11	26	19	56	5	72	11	88	20	19	5	44	13	95	9	117	305
Total Volume	64	118	138	320	31	367	60	458	122	172	23	317	84	419	79	582	1677
% App. Total	20	36.9	43.1		6.8	80.1	13.1		38.5	54.3	7.3		14.4	72	13.6		
PHF	.762	.843	.750	.800	.646	.778	.750	.763	.598	.729	.575	.689	.677	.812	.705	.841	.779

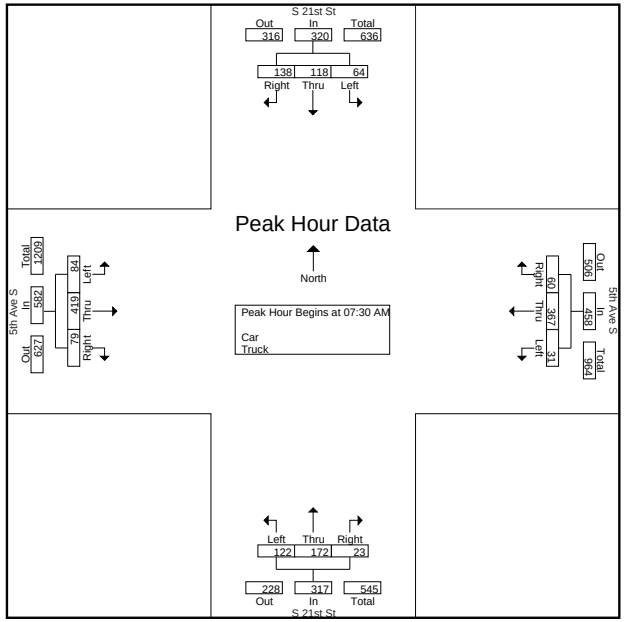

5th Ave S & S 21st St
Fort Dodge Traffic Signal Improvements
Traffic Counts
Fort Dodge, Iowa

File Name : 527-5th S & S 21st
Site Code : 5th Ave S & S 21st St
Start Date : 9/8/2014
Page No : 3

	S 21st St Southbound				5th Ave S Westbound				S 21st St Northbound				5th Ave S Eastbound				
Start Time	Left	Thru	Right	App. Total	Left	Thru	Right	App. Total	Left	Thru	Right	App. Total	Left	Thru	Right	App. Total	Int. Total
Peak Hour Analysis From 10:00 AM to 01:45 PM - Peak 1 of 1																	
Peak Hour for Entire Intersection Begins at 12:00 PM																	
12:00 PM	**44**	**36**	8	**88**	**10**	158	**29**	197	19	**27**	**20**	66	**22**	**216**	23	**261**	**612**
12:15 PM	27	13	**18**	58	7	170	23	200	24	21	14	59	14	193	25	232	549
12:30 PM	44	23	16	83	10	**182**	12	204	18	15	9	42	21	171	**30**	222	551
12:45 PM	31	17	17	65	8	181	22	**211**	**31**	26	15	**72**	17	182	17	216	564
Total Volume	146	89	59	294	35	691	86	812	92	89	58	239	74	762	95	931	2276
% App. Total	49.7	30.3	20.1		4.3	85.1	10.6		38.5	37.2	24.3		7.9	81.8	10.2		
PHF	.830	.618	.819	.835	.875	.949	.741	.962	.742	.824	.725	.830	.841	.882	.792	.892	.930

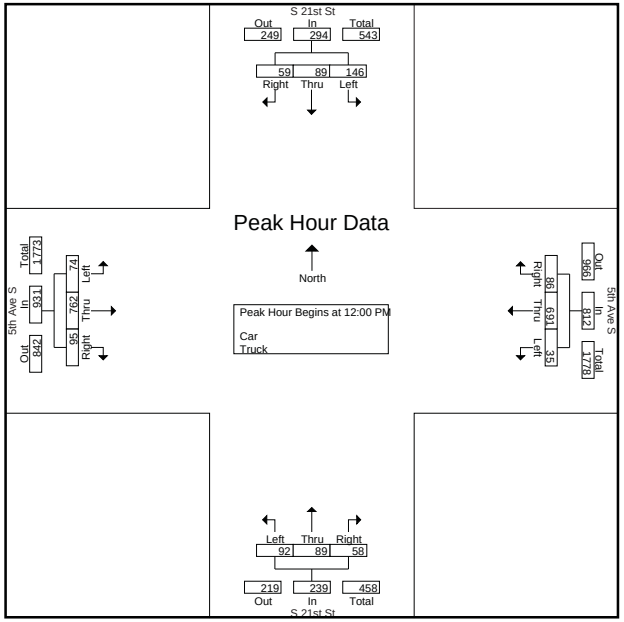

5th Ave S & S 21st St
Fort Dodge Traffic Signal Improvements
Traffic Counts
Fort Dodge, Iowa

File Name : 527-5th S & S 21st
Site Code : 5th Ave S & S 21st St
Start Date : 9/8/2014
Page No : 4

	S 21st St Southbound				5th Ave S Westbound				S 21st St Northbound				5th Ave S Eastbound				
Start Time	Left	Thru	Right	App. Total	Left	Thru	Right	App. Total	Left	Thru	Right	App. Total	Left	Thru	Right	App. Total	Int. Total
Peak Hour Analysis From 02:00 PM to 04:45 PM - Peak 1 of 1																	
Peak Hour for Entire Intersection Begins at 03:15 PM																	
03:15 PM	23	30	20	73	8	133	28	169	25	**53**	**13**	91	**27**	154	**39**	220	553
03:30 PM	25	**46**	**28**	**99**	12	209	22	243	29	52	11	**92**	14	161	20	195	629
03:45 PM	26	40	16	82	**13**	**213**	25	**251**	27	33	13	73	13	**207**	29	**249**	**655**
04:00 PM	**27**	37	21	85	12	167	**32**	211	**30**	44	7	81	15	183	28	226	603
Total Volume	101	153	85	339	45	722	107	874	111	182	44	337	69	705	116	890	2440
% App. Total	29.8	45.1	25.1		5.1	82.6	12.2		32.9	54	13.1		7.8	79.2	13		
PHF	.935	.832	.759	.856	.865	.847	.836	.871	.925	.858	.846	.916	.639	.851	.744	.894	.931

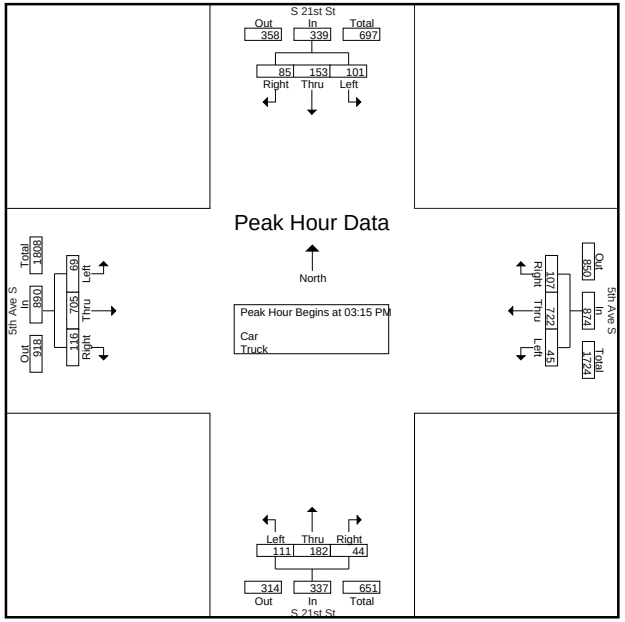

CLICK TO RETURN TO COUNT MAP

5th Ave S & S 25th St
Fort Dodge Traffic Signal Improvements
Traffic Counts
Fort Dodge, Iowa

File Name : 528-5th S & S 25th
Site Code : 5th Ave S & S 25th St
Start Date : 9/3/2014
Page No : 1

Groups Printed- Car - Truck

	S 25th St Southbound				5th Ave S Westbound				S 25th St Northbound				5th Ave S Eastbound				
Start Time	Left	Thru	Right	App. Total	Left	Thru	Right	App. Total	Left	Thru	Right	App. Total	Left	Thru	Right	App. Total	Int. Total
07:00 AM	4	4	9	17	0	47	4	51	2	4	4	10	15	43	4	62	140
07:15 AM	5	5	16	26	6	55	7	68	7	19	3	29	18	54	6	78	201
07:30 AM	7	8	19	34	4	86	6	96	7	30	1	38	32	85	10	127	295
07:45 AM	3	14	38	55	7	97	10	114	8	31	8	47	31	105	14	150	366
Total	19	31	82	132	17	285	27	329	24	84	16	124	96	287	34	417	1002
08:00 AM	8	23	31	62	8	80	9	97	5	19	5	29	37	93	8	138	326
08:15 AM	12	14	28	54	6	73	11	90	8	20	6	34	21	85	14	120	298
08:30 AM	8	10	26	44	4	75	13	92	10	17	4	31	29	85	11	125	292
08:45 AM	4	24	18	46	6	64	12	82	9	23	7	39	41	86	5	132	299
Total	32	71	103	206	24	292	45	361	32	79	22	133	128	349	38	515	1215
09:00 AM	0	0	0	0	0	0	0	0	0	0	0	0	0	1	0	1	1
Total	0	0	0	0	0	0	0	0	0	0	0	0	0	1	0	1	1
11:30 AM	30	18	50	98	10	117	18	145	10	20	7	37	46	185	14	245	525
11:45 AM	23	12	49	84	9	122	25	156	17	21	14	52	38	147	19	204	496
Total	53	30	99	182	19	239	43	301	27	41	21	89	84	332	33	449	1021
12:00 PM	23	28	54	105	13	122	19	154	10	33	11	54	51	176	19	246	559
12:15 PM	17	13	51	81	12	124	23	159	17	22	9	48	56	166	26	248	536
12:30 PM	21	20	53	94	10	149	2	161	26	19	9	54	51	165	13	229	538
12:45 PM	25	20	56	101	16	136	5	157	14	20	7	41	53	167	10	230	529
Total	86	81	214	381	51	531	49	631	67	94	36	197	211	674	68	953	2162
01:00 PM	22	30	55	107	12	134	1	147	15	20	8	43	38	139	7	184	481
01:15 PM	17	18	43	78	15	142	3	160	8	16	10	34	39	155	23	217	489
01:30 PM	0	0	0	0	0	1	0	1	0	0	0	0	0	0	0	0	1
Total	39	48	98	185	27	277	4	308	23	36	18	77	77	294	30	401	971
03:00 PM	21	24	46	91	17	104	7	128	7	18	9	34	45	135	17	197	450
03:15 PM	14	18	52	84	9	112	0	121	8	30	2	40	39	139	14	192	437
03:30 PM	16	25	62	103	15	128	5	148	12	33	4	49	54	165	18	237	537
03:45 PM	12	30	81	123	15	144	9	168	11	20	14	45	47	151	13	211	547
Total	63	97	241	401	56	488	21	565	38	101	29	168	185	590	62	837	1971
04:00 PM	14	17	36	67	8	117	8	133	16	29	11	56	47	174	16	237	493
04:15 PM	12	20	50	82	12	109	17	138	11	29	11	51	48	157	18	223	494
04:30 PM	20	20	56	96	7	96	10	113	21	32	7	60	49	139	17	205	474
04:45 PM	19	20	46	85	10	131	8	149	17	29	13	59	33	176	17	226	519
Total	65	77	188	330	37	453	43	533	65	119	42	226	177	646	68	891	1980
05:00 PM	19	24	62	105	15	132	8	155	24	32	18	74	44	141	17	202	536
05:15 PM	14	28	52	94	16	133	5	154	13	30	14	57	46	170	12	228	533
05:30 PM	19	24	67	110	16	140	11	167	10	16	8	34	34	132	15	181	492
05:45 PM	12	24	38	74	26	101	18	145	19	25	8	52	34	133	13	180	451
Total	64	100	219	383	73	506	42	621	66	103	48	217	158	576	57	791	2012
Grand Total	421	535	1244	2200	304	3071	274	3649	342	657	232	1231	1116	3749	390	5255	12335
Apprch %	19.1	24.3	56.5		8.3	84.2	7.5		27.8	53.4	18.8		21.2	71.3	7.4		
Total %	3.4	4.3	10.1	17.8	2.5	24.9	2.2	29.6	2.8	5.3	1.9	10	9	30.4	3.2	42.6	
Car	414	527	1205	2146	302	2941	271	3514	326	647	229	1202	1089	3614	384	5087	11949
% Car	98.3	98.5	96.9	97.5	99.3	95.8	98.9	96.3	95.3	98.5	98.7	97.6	97.6	96.4	98.5	96.8	96.9
Truck	7	8	39	54	2	130	3	135	16	10	3	29	27	135	6	168	386
% Truck	1.7	1.5	3.1	2.5	0.7	4.2	1.1	3.7	4.7	1.5	1.3	2.4	2.4	3.6	1.5	3.2	3.1

5th Ave S & S 25th St
Fort Dodge Traffic Signal Improvements
Traffic Counts
Fort Dodge, Iowa

File Name : 528-5th S & S 25th
Site Code : 5th Ave S & S 25th St
Start Date : 9/3/2014
Page No : 2

	S 25th St Southbound				5th Ave S Westbound				S 25th St Northbound				5th Ave S Eastbound				
Start Time	Left	Thru	Right	App. Total	Left	Thru	Right	App. Total	Left	Thru	Right	App. Total	Left	Thru	Right	App. Total	Int. Total
Peak Hour Analysis From 07:00 AM to 09:45 AM - Peak 1 of 1																	
Peak Hour for Entire Intersection Begins at 07:30 AM																	
07:30 AM	7	8	19	34	4	86	6	96	7	30	1	38	32	85	10	127	295
07:45 AM	3	14	**38**	55	7	**97**	10	**114**	**8**	**31**	**8**	**47**	31	**105**	**14**	**150**	**366**
08:00 AM	8	**23**	31	**62**	**8**	80	9	97	5	19	5	29	**37**	93	8	138	326
08:15 AM	**12**	14	28	54	6	73	**11**	90	8	20	6	34	21	85	14	120	298
Total Volume	30	59	116	205	25	336	36	397	28	100	20	148	121	368	46	535	1285
% App. Total	14.6	28.8	56.6		6.3	84.6	9.1		18.9	67.6	13.5		22.6	68.8	8.6		
PHF	.625	.641	.763	.827	.781	.866	.818	.871	.875	.806	.625	.787	.818	.876	.821	.892	.878

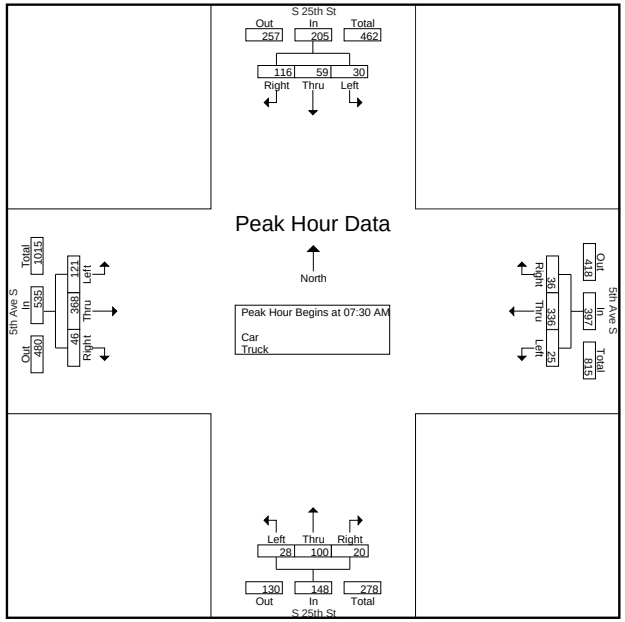

5th Ave S & S 25th St
Fort Dodge Traffic Signal Improvements
Traffic Counts
Fort Dodge, Iowa

File Name : 528-5th S & S 25th
Site Code : 5th Ave S & S 25th St
Start Date : 9/3/2014
Page No : 3

	S 25th St Southbound				5th Ave S Westbound				S 25th St Northbound				5th Ave S Eastbound				
Start Time	Left	Thru	Right	App. Total	Left	Thru	Right	App. Total	Left	Thru	Right	App. Total	Left	Thru	Right	App. Total	Int. Total
Peak Hour Analysis From 10:00 AM to 01:45 PM - Peak 1 of 1																	
Peak Hour for Entire Intersection Begins at 12:00 PM																	
12:00 PM	23	**28**	54	**105**	13	122	19	154	10	**33**	**11**	**54**	51	**176**	19	246	**559**
12:15 PM	17	13	51	81	12	124	**23**	159	17	22	9	48	**56**	166	**26**	**248**	536
12:30 PM	21	20	53	94	10	**149**	2	**161**	**26**	19	9	54	51	165	13	229	538
12:45 PM	**25**	20	**56**	101	**16**	136	5	157	14	20	7	41	53	167	10	230	529
Total Volume	86	81	214	381	51	531	49	631	67	94	36	197	211	674	68	953	2162
% App. Total	22.6	21.3	56.2		8.1	84.2	7.8		34	47.7	18.3		22.1	70.7	7.1		
PHF	.860	.723	.955	.907	.797	.891	.533	.980	.644	.712	.818	.912	.942	.957	.654	.961	.967

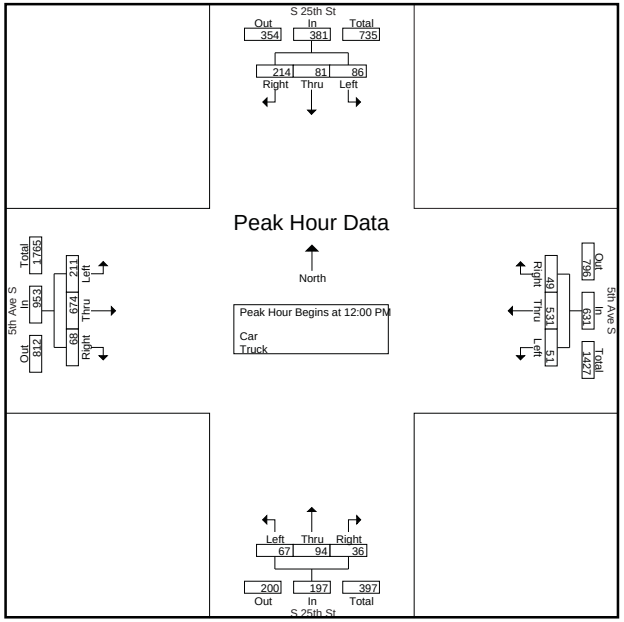

5th Ave S & S 25th St
Fort Dodge Traffic Signal Improvements
Traffic Counts
Fort Dodge, Iowa

File Name : 528-5th S & S 25th
Site Code : 5th Ave S & S 25th St
Start Date : 9/3/2014
Page No : 4

	S 25th St Southbound				5th Ave S Westbound				S 25th St Northbound				5th Ave S Eastbound				
Start Time	Left	Thru	Right	App. Total	Left	Thru	Right	App. Total	Left	Thru	Right	App. Total	Left	Thru	Right	App. Total	Int. Total
Peak Hour Analysis From 02:00 PM to 05:45 PM - Peak 1 of 1																	
Peak Hour for Entire Intersection Begins at 04:45 PM																	
04:45 PM	**19**	20	46	85	10	131	8	149	17	29	13	59	33	**176**	**17**	226	519
05:00 PM	19	24	62	105	15	132	8	155	**24**	**32**	**18**	**74**	44	141	17	202	**536**
05:15 PM	14	**28**	52	94	**16**	133	5	154	13	30	14	57	**46**	170	12	**228**	533
05:30 PM	19	24	**67**	**110**	16	**140**	**11**	**167**	10	16	8	34	34	132	15	181	492
Total Volume	71	96	227	394	57	536	32	625	64	107	53	224	157	619	61	837	2080
% App. Total	18	24.4	57.6		9.1	85.8	5.1		28.6	47.8	23.7		18.8	74	7.3		
PHF	.934	.857	.847	.895	.891	.957	.727	.936	.667	.836	.736	.757	.853	.879	.897	.918	.970

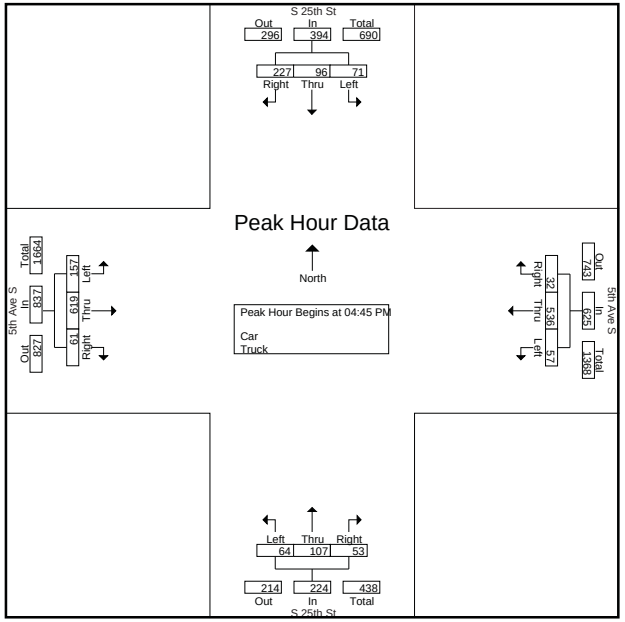

CLICK TO RETURN TO COUNT MAP

5th Ave S & S 29th St
Fort Dodge Traffic Signal Improvements
Traffic Counts
Fort Dodge, Iowa

File Name : 529-5th S & S 29th
Site Code : 5th Ave S & S 29th St
Start Date : 9/3/2014
Page No : 1

Groups Printed- Car - Truck

	S 29th St Southbound				5th Ave S Westbound				S 29th St Northbound				5th Ave S Eastbound				
Start Time	Left	Thru	Right	App. Total	Left	Thru	Right	App. Total	Left	Thru	Right	App. Total	Left	Thru	Right	App. Total	Int. Total
07:00 AM	6	3	5	14	1	47	5	53	1	5	0	6	6	39	0	45	118
07:15 AM	4	4	10	18	1	57	5	63	2	9	3	14	12	43	3	58	153
07:30 AM	4	6	18	28	2	82	3	87	1	9	2	12	16	72	4	92	219
07:45 AM	6	15	31	52	2	83	2	87	3	9	2	14	19	71	1	91	244
Total	20	28	64	112	6	269	15	290	7	32	7	46	53	225	8	286	734
08:00 AM	7	12	20	39	8	61	6	75	5	6	7	18	18	75	7	100	232
08:15 AM	6	8	11	25	5	75	8	88	6	9	2	17	26	73	4	103	233
08:30 AM	10	7	18	35	2	84	13	99	2	7	1	10	19	53	5	77	221
08:45 AM	7	9	14	30	2	55	6	63	5	10	3	18	28	59	4	91	202
Total	30	36	63	129	17	275	33	325	18	32	13	63	91	260	20	371	888
11:30 AM	23	24	35	82	7	90	25	122	10	14	5	29	61	120	6	187	420
11:45 AM	13	11	46	70	2	118	24	144	10	14	7	31	45	125	6	176	421
Total	36	35	81	152	9	208	49	266	20	28	12	60	106	245	12	363	841
12:00 PM	19	22	43	84	12	111	22	145	13	17	3	33	64	123	6	193	455
12:15 PM	31	16	42	89	10	111	23	144	10	16	7	33	56	111	4	171	437
12:30 PM	29	20	52	101	5	121	26	152	7	15	10	32	52	117	9	178	463
12:45 PM	20	16	50	86	8	104	18	130	4	18	3	25	55	126	6	187	428
Total	99	74	187	360	35	447	89	571	34	66	23	123	227	477	25	729	1783
01:00 PM	23	13	46	82	5	126	15	146	12	16	3	31	42	121	6	169	428
01:15 PM	27	18	51	96	7	117	25	149	2	14	7	23	40	122	10	172	440
01:30 PM	0	0	0	0	0	1	1	2	0	0	0	0	0	0	0	0	2
Total	50	31	97	178	12	244	41	297	14	30	10	54	82	243	16	341	870
03:00 PM	17	21	37	75	5	96	20	121	3	12	0	15	54	103	8	165	376
03:15 PM	21	19	42	82	6	78	17	101	10	17	0	27	47	99	5	151	361
03:30 PM	17	17	53	87	5	104	16	125	12	14	0	26	57	136	1	194	432
03:45 PM	29	15	51	95	8	90	12	110	1	15	0	16	64	101	5	170	391
Total	84	72	183	339	24	368	65	457	26	58	0	84	222	439	19	680	1560
04:00 PM	20	25	40	85	8	98	14	120	9	13	0	22	52	121	10	183	410
04:15 PM	14	13	36	63	2	88	20	110	4	14	0	18	60	95	7	162	353
04:30 PM	15	11	41	67	2	78	10	90	7	18	0	25	58	109	5	172	354
04:45 PM	23	18	64	105	7	94	16	117	9	17	0	26	71	111	11	193	441
Total	72	67	181	320	19	358	60	437	29	62	0	91	241	436	33	710	1558
05:00 PM	22	20	53	95	11	97	17	125	10	16	0	26	55	125	3	183	429
05:15 PM	22	15	60	97	4	122	19	145	4	16	0	20	73	98	10	181	443
05:30 PM	20	29	47	96	7	107	26	140	13	17	0	30	53	74	5	132	398
05:45 PM	29	16	37	82	7	101	15	123	9	13	0	22	43	89	6	138	365
Total	93	80	197	370	29	427	77	533	36	62	0	98	224	386	24	634	1635
Grand Total	484	423	1053	1960	151	2596	429	3176	184	370	65	619	1246	2711	157	4114	9869
Apprch %	24.7	21.6	53.7		4.8	81.7	13.5		29.7	59.8	10.5		30.3	65.9	3.8		
Total %	4.9	4.3	10.7	19.9	1.5	26.3	4.3	32.2	1.9	3.7	0.7	6.3	12.6	27.5	1.6	41.7	
Car	462	413	1042	1917	144	2471	415	3030	180	367	60	607	1239	2575	150	3964	9518
% Car	95.5	97.6	99	97.8	95.4	95.2	96.7	95.4	97.8	99.2	92.3	98.1	99.4	95	95.5	96.4	96.4
Truck	22	10	11	43	7	125	14	146	4	3	5	12	7	136	7	150	351
% Truck	4.5	2.4	1	2.2	4.6	4.8	3.3	4.6	2.2	0.8	7.7	1.9	0.6	5	4.5	3.6	3.6

5th Ave S & S 29th St
Fort Dodge Traffic Signal Improvements
Traffic Counts
Fort Dodge, Iowa

File Name : 529-5th S & S 29th
Site Code : 5th Ave S & S 29th St
Start Date : 9/3/2014
Page No : 2

	S 29th St Southbound				5th Ave S Westbound				S 29th St Northbound				5th Ave S Eastbound				
Start Time	Left	Thru	Right	App. Total	Left	Thru	Right	App. Total	Left	Thru	Right	App. Total	Left	Thru	Right	App. Total	Int. Total
Peak Hour Analysis From 07:00 AM to 09:45 AM - Peak 1 of 1																	
Peak Hour for Entire Intersection Begins at 07:45 AM																	
07:45 AM	6	**15**	**31**	**52**	2	83	2	87	3	**9**	2	14	19	71	1	91	**244**
08:00 AM	7	12	20	39	**8**	61	6	75	5	6	**7**	**18**	18	**75**	**7**	100	232
08:15 AM	6	8	11	25	5	75	8	88	**6**	9	2	17	**26**	73	4	**103**	233
08:30 AM	**10**	7	18	35	2	**84**	**13**	**99**	2	7	1	10	19	53	5	77	221
Total Volume	29	42	80	151	17	303	29	349	16	31	12	59	82	272	17	371	930
% App. Total	19.2	27.8	53		4.9	86.8	8.3		27.1	52.5	20.3		22.1	73.3	4.6		
PHF	.725	.700	.645	.726	.531	.902	.558	.881	.667	.861	.429	.819	.788	.907	.607	.900	.953

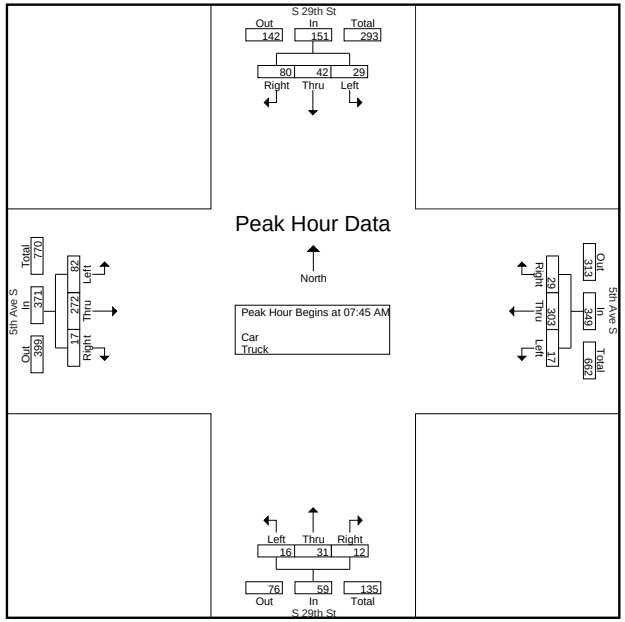

5th Ave S & S 29th St
Fort Dodge Traffic Signal Improvements
Traffic Counts
Fort Dodge, Iowa

File Name : 529-5th S & S 29th
Site Code : 5th Ave S & S 29th St
Start Date : 9/3/2014
Page No : 3

	S 29th St Southbound				5th Ave S Westbound				S 29th St Northbound				5th Ave S Eastbound				
Start Time	Left	Thru	Right	App. Total	Left	Thru	Right	App. Total	Left	Thru	Right	App. Total	Left	Thru	Right	App. Total	Int. Total
Peak Hour Analysis From 10:00 AM to 01:45 PM - Peak 1 of 1																	
Peak Hour for Entire Intersection Begins at 12:00 PM																	
12:00 PM	19	**22**	43	84	**12**	111	22	145	**13**	17	3	**33**	**64**	123	6	**193**	455
12:15 PM	**31**	16	42	89	10	111	23	144	10	16	7	33	56	111	4	171	437
12:30 PM	29	20	**52**	**101**	5	**121**	**26**	**152**	7	15	**10**	32	52	117	**9**	178	**463**
12:45 PM	20	16	50	86	8	104	18	130	4	**18**	3	25	55	**126**	6	187	428
Total Volume	99	74	187	360	35	447	89	571	34	66	23	123	227	477	25	729	1783
% App. Total	27.5	20.6	51.9		6.1	78.3	15.6		27.6	53.7	18.7		31.1	65.4	3.4		
PHF	.798	.841	.899	.891	.729	.924	.856	.939	.654	.917	.575	.932	.887	.946	.694	.944	.963

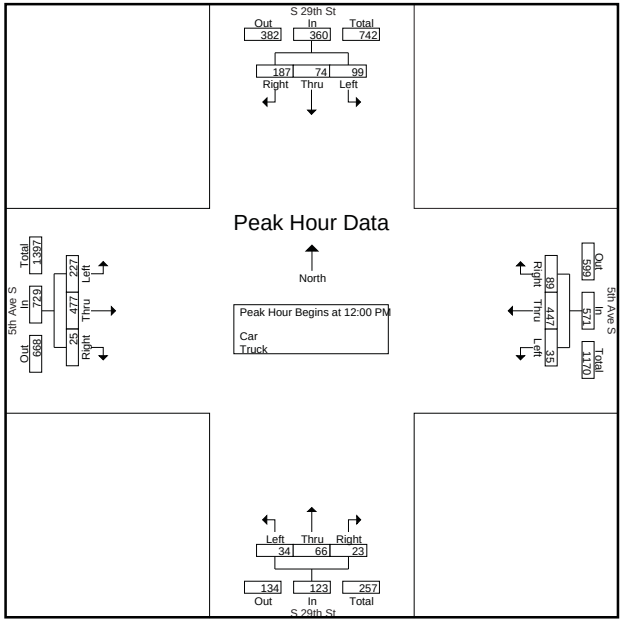

5th Ave S & S 29th St
Fort Dodge Traffic Signal Improvements
Traffic Counts
Fort Dodge, Iowa

File Name : 529-5th S & S 29th
Site Code : 5th Ave S & S 29th St
Start Date : 9/3/2014
Page No : 4

	S 29th St Southbound				5th Ave S Westbound				S 29th St Northbound				5th Ave S Eastbound				
Start Time	Left	Thru	Right	App. Total	Left	Thru	Right	App. Total	Left	Thru	Right	App. Total	Left	Thru	Right	App. Total	Int. Total
Peak Hour Analysis From 02:00 PM to 05:45 PM - Peak 1 of 1																	
Peak Hour for Entire Intersection Begins at 04:45 PM																	
04:45 PM	**23**	18	**64**	**105**	7	94	16	117	9	**17**	0	26	71	111	**11**	**193**	441
05:00 PM	22	20	53	95	**11**	97	17	125	10	16	0	26	55	**125**	3	183	429
05:15 PM	22	15	60	97	4	**122**	19	**145**	4	16	0	20	**73**	98	10	181	**443**
05:30 PM	20	**29**	47	96	7	107	**26**	140	**13**	17	0	**30**	53	74	5	132	398
Total Volume	87	82	224	393	29	420	78	527	36	66	0	102	252	408	29	689	1711
% App. Total	22.1	20.9	57		5.5	79.7	14.8		35.3	64.7	0		36.6	59.2	4.2		
PHF	.946	.707	.875	.936	.659	.861	.750	.909	.692	.971	.000	.850	.863	.816	.659	.892	.966

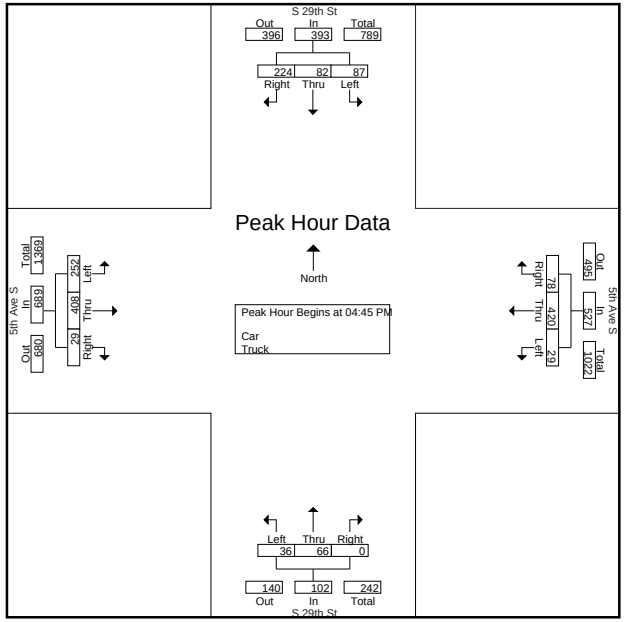

CLICK TO RETURN TO COUNT MAP

5th Ave S & S 30th St
Fort Dodge Traffic Signal Improvements
Traffic Counts
Fort Dodge, Iowa

File Name : 530-5th S & S 30th
Site Code : 00000000
Start Date : 9/3/2014
Page No : 1

Groups Printed- Car - Truck

	S 30TH ST Southbound					5TH AVE S Westbound					S 30TH ST Northbound					5TH AVE S Eastbound					
Start Time			Right	Peds	App. Total	Left	Thru	Right	Peds	App. Total	Left	Thru	Right	Peds	App. Total	Left	Thru	Right	Peds	App. Total	Int. Total
07:00 AM	0	0	0	0	0	0	49	0	0	49	3	0	1	0	4	0	46	1	0	47	100
07:15 AM	0	0	0	0	0	4	61	0	0	65	2	0	2	0	4	0	47	3	0	50	119
07:30 AM	0	0	0	0	0	2	93	0	0	95	0	0	1	0	1	0	71	0	0	71	167
07:45 AM	0	0	0	0	0	4	89	0	0	93	1	0	4	0	5	0	81	1	0	82	180
Total	0	0	0	0	0	10	292	0	0	302	6	0	8	0	14	0	245	5	0	250	566
08:00 AM	0	0	0	0	0	2	74	0	0	76	2	0	5	0	7	0	73	3	0	76	159
08:15 AM	0	0	0	0	0	1	95	0	0	96	3	0	2	0	5	0	71	0	0	71	172
Total	0	0	0	0	0	3	169	0	0	172	5	0	7	0	12	0	144	3	0	147	331
12:00 PM	0	0	0	0	0	4	160	0	0	164	1	0	1	0	2	0	130	0	0	130	296
12:15 PM	0	0	0	0	0	5	123	0	0	128	5	0	3	0	8	0	151	0	0	151	287
12:30 PM	0	0	0	0	0	5	146	0	0	151	14	0	10	0	24	0	131	1	0	132	307
12:45 PM	0	0	0	0	0	4	124	0	0	128	3	0	4	0	7	0	135	0	0	135	270
Total	0	0	0	0	0	18	553	0	0	571	23	0	18	0	41	0	547	1	0	548	1160
01:00 PM	0	0	0	0	0	2	128	0	0	130	7	0	7	0	14	0	146	2	0	148	292
01:15 PM	0	0	0	0	0	2	148	0	0	150	11	0	6	0	17	0	134	3	0	137	304
Total	0	0	0	0	0	4	276	0	0	280	18	0	13	0	31	0	280	5	0	285	596
03:45 PM	0	0	0	0	0	2	103	0	0	105	7	0	1	0	8	1	130	0	0	131	244
Total	0	0	0	0	0	2	103	0	0	105	7	0	1	0	8	1	130	0	0	131	244
04:00 PM	0	0	0	0	0	5	108	0	0	113	6	0	4	0	10	0	132	2	0	134	257
04:15 PM	0	0	0	0	0	2	109	0	0	111	4	0	4	0	8	0	121	1	0	122	241
04:30 PM	0	0	0	0	0	3	86	0	0	89	5	0	4	0	9	0	116	0	0	116	214
04:45 PM	0	0	0	0	0	2	124	0	0	126	2	0	4	0	6	0	136	0	0	136	268
Total	0	0	0	0	0	12	427	0	0	439	17	0	16	0	33	0	505	3	0	508	980
05:00 PM	0	0	0	0	0	2	126	0	0	128	2	0	4	0	6	0	151	0	0	151	285
05:15 PM	0	0	0	0	0	8	130	0	0	138	6	0	4	0	10	0	107	2	0	109	257
05:30 PM	0	0	0	0	0	3	126	0	0	129	8	0	7	0	15	0	100	2	0	102	246
Grand Total	0	0	0	0	0	62	2202	0	0	2264	92	0	78	0	170	1	2209	21	0	2231	4665
Apprch %	0	0	0	0		2.7	97.3	0	0		54.1	0	45.9	0		0	99	0.9	0		
Total %	0	0	0	0	0	1.3	47.2	0	0	48.5	2	0	1.7	0	3.6	0	47.4	0.5	0	47.8	
Car	0	0	0	0	0	57	2111	0	0	2168	89	0	74	0	163	1	2125	19	0	2145	4476
% Car	0	0	0	0	0	91.9	95.9	0	0	95.8	96.7	0	94.9	0	95.9	100	96.2	90.5	0	96.1	95.9
Truck	0	0	0	0	0	5	91	0	0	96	3	0	4	0	7	0	84	2	0	86	189
% Truck	0	0	0	0	0	8.1	4.1	0	0	4.2	3.3	0	5.1	0	4.1	0	3.8	9.5	0	3.9	4.1

5th Ave S & S 30th St
Fort Dodge Traffic Signal Improvements
Traffic Counts
Fort Dodge, Iowa

File Name : 530-5th S & S 30th
Site Code : 00000000
Start Date : 9/3/2014
Page No : 2

	S 30TH ST Southbound					5TH AVE S Westbound					S 30TH ST Northbound					5TH AVE S Eastbound					
Start Time	Left	Thru	Right	Peds	App. Total	Left	Thru	Right	Peds	App. Total	Left	Thru	Right	Peds	App. Total	Left	Thru	Right	Peds	App. Total	Int. Total
Peak Hour Analysis From 07:00 AM to 09:45 AM - Peak 1 of 1																					
Peak Hour for Entire Intersection Begins at 07:30 AM																					
07:30 AM	0	0	0	0	0	2	93	0	0	95	0	0	1	0	1	0	71	0	0	71	167
07:45 AM	0	0	0	0	0	**4**	89	0	0	93	1	0	4	0	5	0	**81**	1	0	**82**	**180**
08:00 AM	0	0	0	0	0	2	74	0	0	76	2	0	**5**	0	**7**	0	73	**3**	0	76	159
08:15 AM	0	0	0	0	0	1	**95**	0	0	**96**	**3**	0	2	0	5	0	71	0	0	71	172
Total Volume	0	0	0	0	0	9	351	0	0	360	6	0	12	0	18	0	296	4	0	300	678
% App. Total	0	0	0	0		2.5	97.5	0	0		33.3	0	66.7	0		0	98.7	1.3	0		
PHF	.000	.000	.000	.000	.000	.563	.924	.000	.000	.938	.500	.000	.600	.000	.643	.000	.914	.333	.000	.915	.942

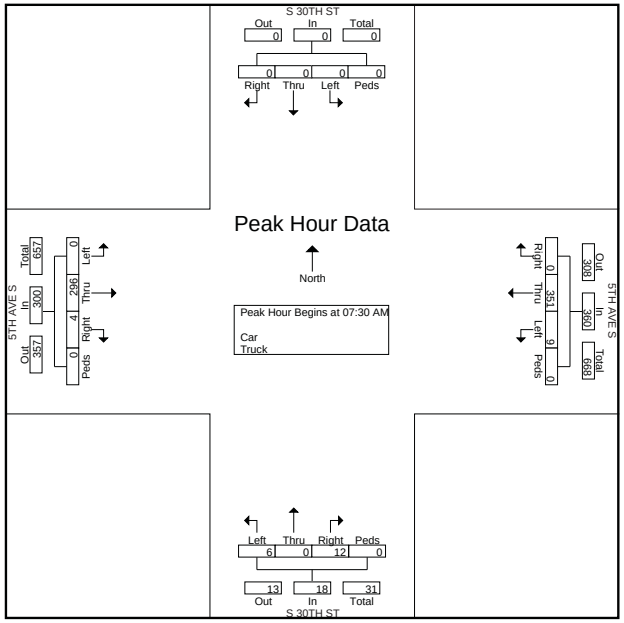

5th Ave S & S 30th St
Fort Dodge Traffic Signal Improvements
Traffic Counts
Fort Dodge, Iowa

File Name : 530-5th S & S 30th
Site Code : 00000000
Start Date : 9/3/2014
Page No : 3

	S 30TH ST Southbound					5TH AVE S Westbound					S 30TH ST Northbound					5TH AVE S Eastbound					
Start Time	Left	Thru	Right	Peds	App. Total	Left	Thru	Right	Peds	App. Total	Left	Thru	Right	Peds	App. Total	Left	Thru	Right	Peds	App. Total	Int. Total
Peak Hour Analysis From 10:00 AM to 01:45 PM - Peak 1 of 1																					
Peak Hour for Entire Intersection Begins at 12:30 PM																					
12:30 PM	0	0	0	0	0	**5**	146	0	0	**151**	**14**	0	**10**	0	**24**	0	131	1	0	132	**307**
12:45 PM	0	0	0	0	0	4	124	0	0	128	3	0	4	0	7	0	135	0	0	135	270
01:00 PM	0	0	0	0	0	2	128	0	0	130	7	0	7	0	14	0	**146**	2	0	**148**	292
01:15 PM	0	0	0	0	0	2	**148**	0	0	150	11	0	6	0	17	0	134	**3**	0	137	304
Total Volume	0	0	0	0	0	13	546	0	0	559	35	0	27	0	62	0	546	6	0	552	1173
% App. Total	0	0	0	0		2.3	97.7	0	0		56.5	0	43.5	0		0	98.9	1.1	0		
PHF	.000	.000	.000	.000	.000	.650	.922	.000	.000	.925	.625	.000	.675	.000	.646	.000	.935	.500	.000	.932	.955

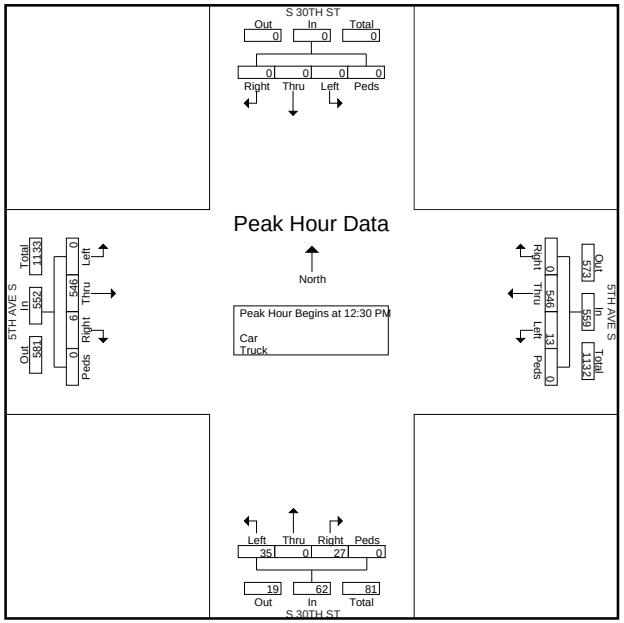

5th Ave S & S 30th St
Fort Dodge Traffic Signal Improvements
Traffic Counts
Fort Dodge, Iowa

File Name : 530-5th S & S 30th
Site Code : 00000000
Start Date : 9/3/2014
Page No : 4

	S 30TH ST Southbound					5TH AVE S Westbound					S 30TH ST Northbound					5TH AVE S Eastbound					
Start Time	Left	Thru	Right	Peds	App. Total	Left	Thru	Right	Peds	App. Total	Left	Thru	Right	Peds	App. Total	Left	Thru	Right	Peds	App. Total	Int. Total
Peak Hour Analysis From 02:00 PM to 05:30 PM - Peak 1 of 1																					
Peak Hour for Entire Intersection Begins at 04:45 PM																					
04:45 PM	0	0	0	0	0	2	124	0	0	126	2	0	4	0	6	0	136	0	0	136	268
05:00 PM	0	0	0	0	0	2	126	0	0	128	2	0	4	0	6	0	**151**	0	0	**151**	**285**
05:15 PM	0	0	0	0	0	**8**	**130**	0	0	**138**	6	0	4	0	10	0	107	**2**	0	109	257
05:30 PM	0	0	0	0	0	3	126	0	0	129	**8**	0	**7**	0	**15**	0	100	2	0	102	246
Total Volume	0	0	0	0	0	15	506	0	0	521	18	0	19	0	37	0	494	4	0	498	1056
% App. Total	0	0	0	0		2.9	97.1	0	0		48.6	0	51.4	0		0	99.2	0.8	0		
PHF	.000	.000	.000	.000	.000	.469	.973	.000	.000	.944	.563	.000	.679	.000	.617	.000	.818	.500	.000	.825	.926

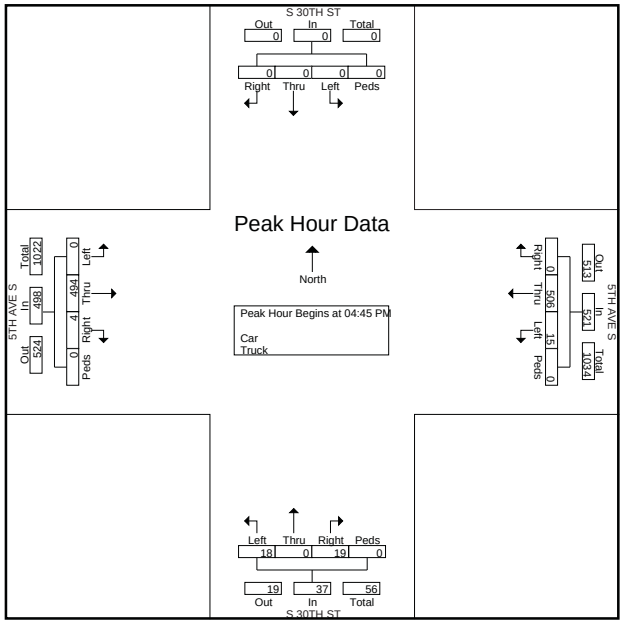

CLICK TO RETURN TO COUNT MAP

5th Ave S & S 31st St
Fort Dodge Traffic Signal Improvements
Traffic Counts
Fort Dodge, Iowa

File Name : 531-5th S & S 31st
Site Code : 00000000
Start Date : 9/4/2014
Page No : 1

Groups Printed- Car - Truck

	S 31ST ST Southbound					5TH AVE S Westbound					S 31ST ST Northbound					5TH AVE S Eastbound					
Start Time			Right	Peds	App. Total	Left	Thru	Right	Peds	App. Total	Left	Thru	Right	Peds	App. Total	Left	Thru	Right	Peds	App. Total	Int. Total
07:00 AM	0	3	2	0	5	2	39	0	0	41	5	1	7	0	13	5	54	4	0	63	122
07:15 AM	2	3	4	0	9	4	58	0	0	62	1	2	1	0	4	3	49	3	0	55	130
07:30 AM	2	3	4	0	9	6	82	1	0	89	7	5	4	0	16	4	61	5	0	70	184
07:45 AM	0	5	5	0	10	3	100	2	0	105	2	3	3	0	8	8	71	5	0	84	207
Total	4	14	15	0	33	15	279	3	0	297	15	11	15	0	41	20	235	17	0	272	643
08:00 AM	2	4	5	0	11	3	75	1	0	79	7	2	4	0	13	4	64	4	0	72	175
08:15 AM	1	2	5	0	8	3	71	2	0	76	8	5	3	0	16	4	63	2	0	69	169
Total	3	6	10	0	19	6	146	3	0	155	15	7	7	0	29	8	127	6	0	141	344
11:45 AM	2	4	9	0	15	4	124	0	0	128	7	8	4	0	19	7	109	8	1	125	287
Total	2	4	9	0	15	4	124	0	0	128	7	8	4	0	19	7	109	8	1	125	287
12:00 PM	1	6	19	0	26	15	137	0	0	152	10	5	10	0	25	19	109	15	0	143	346
12:15 PM	3	6	14	0	23	8	105	0	0	113	10	9	8	0	27	9	109	16	0	134	297
12:30 PM	1	9	5	0	15	4	97	1	0	102	12	3	5	0	20	15	117	8	0	140	277
12:45 PM	1	3	9	0	13	8	96	2	0	106	7	4	1	0	12	9	99	6	0	114	245
Total	6	24	47	0	77	35	435	3	0	473	39	21	24	0	84	52	434	45	0	531	1165
01:00 PM	0	3	8	0	11	7	76	2	0	85	9	4	2	0	15	14	96	7	0	117	228
Total	0	3	8	0	11	7	76	2	0	85	9	4	2	0	15	14	96	7	0	117	228
04:00 PM	0	8	5	0	13	5	100	4	0	109	12	10	2	0	24	11	91	9	0	111	257
04:15 PM	2	4	7	0	13	5	72	1	0	78	5	5	11	0	21	22	100	9	0	131	243
04:30 PM	3	11	9	0	23	5	74	2	0	81	8	5	9	0	22	11	76	7	0	94	220
04:45 PM	1	7	9	0	17	8	80	2	0	90	7	6	3	0	16	20	84	9	0	113	236
Total	6	30	30	0	66	23	326	9	0	358	32	26	25	0	83	64	351	34	0	449	956
05:00 PM	1	9	14	0	24	15	106	0	0	121	7	14	13	0	34	14	111	14	0	139	318
05:15 PM	0	8	13	0	21	7	90	1	0	98	7	7	11	0	25	12	102	5	0	119	263
05:30 PM	0	6	12	0	18	11	72	0	0	83	4	7	11	0	22	9	100	12	0	121	244
05:45 PM	1	5	8	0	14	3	90	0	0	93	3	8	9	0	20	14	101	4	0	119	246
Total	2	28	47	0	77	36	358	1	0	395	21	36	44	0	101	49	414	35	0	498	1071
Grand Total	23	109	166	0	298	126	1744	21	0	1891	138	113	121	0	372	214	1766	152	1	2133	4694
Apprch %	7.7	36.6	55.7	0		6.7	92.2	1.1	0		37.1	30.4	32.5	0		10	82.8	7.1	0		
Total %	0.5	2.3	3.5	0	6.3	2.7	37.2	0.4	0	40.3	2.9	2.4	2.6	0	7.9	4.6	37.6	3.2	0	45.4	
Car	22	109	166	0	297	125	1652	21	0	1798	137	113	121	0	371	213	1672	147	1	2033	4499
% Car	95.7	100	100	0	99.7	99.2	94.7	100	0	95.1	99.3	100	100	0	99.7	99.5	94.7	96.7	100	95.3	95.8
Truck	1	0	0	0	1	1	92	0	0	93	1	0	0	0	1	1	94	5	0	100	195
% Truck	4.3	0	0	0	0.3	0.8	5.3	0	0	4.9	0.7	0	0	0	0.3	0.5	5.3	3.3	0	4.7	4.2

5th Ave S & S 31st St
Fort Dodge Traffic Signal Improvements
Traffic Counts
Fort Dodge, Iowa

File Name : 531-5th S & S 31st
Site Code : 00000000
Start Date : 9/4/2014
Page No : 2

	S 31ST ST Southbound					5TH AVE S Westbound					S 31ST ST Northbound					5TH AVE S Eastbound					
Start Time	Left	Thru	Right	Peds	App. Total	Left	Thru	Right	Peds	App. Total	Left	Thru	Right	Peds	App. Total	Left	Thru	Right	Peds	App. Total	Int. Total
Peak Hour Analysis From 07:00 AM to 09:45 AM - Peak 1 of 1																					
Peak Hour for Entire Intersection Begins at 07:30 AM																					
07:30 AM	**2**	3	4	0	9	**6**	82	1	0	89	7	**5**	**4**	0	**16**	4	61	**5**	0	70	184
07:45 AM	0	**5**	**5**	0	10	3	**100**	**2**	0	**105**	2	3	3	0	8	**8**	**71**	5	0	**84**	**207**
08:00 AM	2	4	5	0	**11**	3	75	1	0	79	7	2	4	0	13	4	64	4	0	72	175
08:15 AM	1	2	5	0	8	3	71	2	0	76	**8**	5	3	0	16	4	63	2	0	69	169
Total Volume	5	14	19	0	38	15	328	6	0	349	24	15	14	0	53	20	259	16	0	295	735
% App. Total	13.2	36.8	50	0		4.3	94	1.7	0		45.3	28.3	26.4	0		6.8	87.8	5.4	0		
PHF	.625	.700	.950	.000	.864	.625	.820	.750	.000	.831	.750	.750	.875	.000	.828	.625	.912	.800	.000	.878	.888

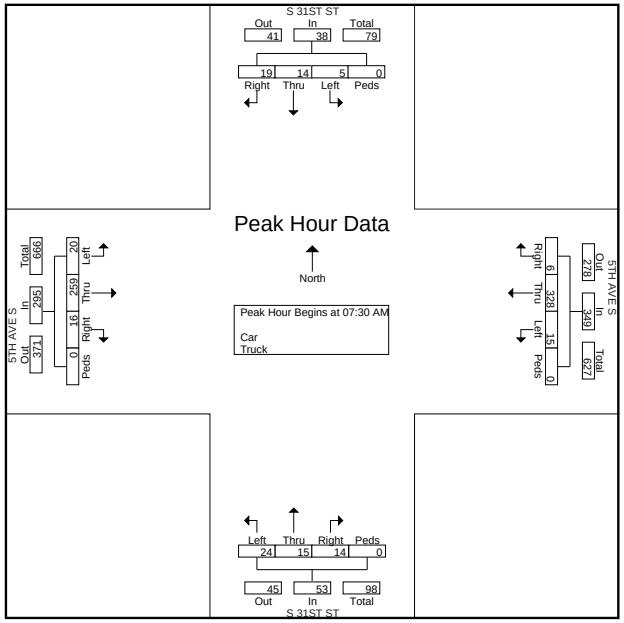

5th Ave S & S 31st St
Fort Dodge Traffic Signal Improvements
Traffic Counts
Fort Dodge, Iowa

File Name : 531-5th S & S 31st
Site Code : 00000000
Start Date : 9/4/2014
Page No : 3

	S 31ST ST Southbound					5TH AVE S Westbound					S 31ST ST Northbound					5TH AVE S Eastbound					
Start Time	Left	Thru	Right	Peds	App. Total	Left	Thru	Right	Peds	App. Total	Left	Thru	Right	Peds	App. Total	Left	Thru	Right	Peds	App. Total	Int. Total
Peak Hour Analysis From 10:00 AM to 01:45 PM - Peak 1 of 1																					
Peak Hour for Entire Intersection Begins at 11:45 AM																					
11:45 AM	2	4	9	0	15	4	124	0	0	128	7	8	4	0	19	7	109	8	**1**	125	287
12:00 PM	1	6	**19**	0	**26**	**15**	**137**	0	0	**152**	10	5	**10**	0	25	**19**	109	15	0	**143**	**346**
12:15 PM	**3**	6	14	0	23	8	105	0	0	113	10	**9**	8	0	**27**	9	109	**16**	0	134	297
12:30 PM	1	**9**	5	0	15	4	97	**1**	0	102	**12**	3	5	0	20	15	**117**	8	0	140	277
Total Volume	7	25	47	0	79	31	463	1	0	495	39	25	27	0	91	50	444	47	1	542	1207
% App. Total	8.9	31.6	59.5	0		6.3	93.5	0.2	0		42.9	27.5	29.7	0		9.2	81.9	8.7	0.2		
PHF	.583	.694	.618	.000	.760	.517	.845	.250	.000	.814	.813	.694	.675	.000	.843	.658	.949	.734	.250	.948	.872

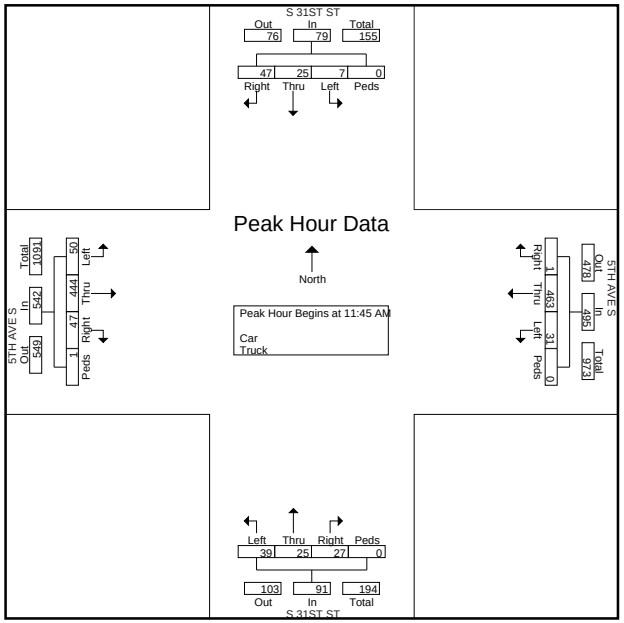

5th Ave S & S 31st St
Fort Dodge Traffic Signal Improvements
Traffic Counts
Fort Dodge, Iowa

File Name : 531-5th S & S 31st
Site Code : 00000000
Start Date : 9/4/2014
Page No : 4

	S 31ST ST Southbound					5TH AVE S Westbound					S 31ST ST Northbound					5TH AVE S Eastbound					
Start Time	Left	Thru	Right	Peds	App. Total	Left	Thru	Right	Peds	App. Total	Left	Thru	Right	Peds	App. Total	Left	Thru	Right	Peds	App. Total	Int. Total
Peak Hour Analysis From 02:00 PM to 05:45 PM - Peak 1 of 1																					
Peak Hour for Entire Intersection Begins at 05:00 PM																					
05:00 PM	**1**	**9**	**14**	0	**24**	**15**	**106**	0	0	**121**	**7**	**14**	**13**	0	**34**	**14**	**111**	**14**	0	**139**	**318**
05:15 PM	0	8	13	0	21	7	90	**1**	0	98	7	7	11	0	25	12	102	5	0	119	263
05:30 PM	0	6	12	0	18	11	72	0	0	83	4	7	11	0	22	9	100	12	0	121	244
05:45 PM	1	5	8	0	14	3	90	0	0	93	3	8	9	0	20	14	101	4	0	119	246
Total Volume	2	28	47	0	77	36	358	1	0	395	21	36	44	0	101	49	414	35	0	498	1071
% App. Total	2.6	36.4	61	0		9.1	90.6	0.3	0		20.8	35.6	43.6	0		9.8	83.1	7	0		
PHF	.500	.778	.839	.000	.802	.600	.844	.250	.000	.816	.750	.643	.846	.000	.743	.875	.932	.625	.000	.896	.842

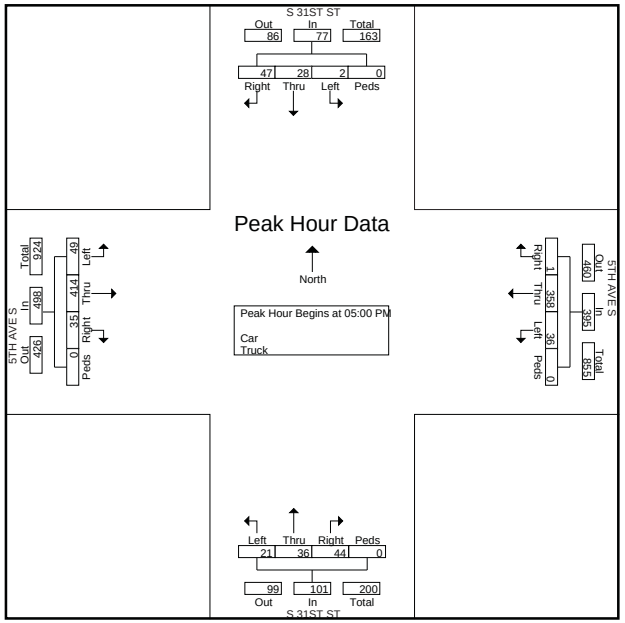

CLICK TO RETURN TO COUNT MAP

5th Ave S & S 32nd St
Fort Dodge Traffic Signal Improvements
Traffic Counts
Fort Dodge, Iowa

File Name : 532-5th S & S 32nd
Site Code : 5th Ave S & S 32nd St
Start Date : 9/4/2014
Page No : 1

Groups Printed- Car - Truck

	S 32nd St Southbound				5th Ave S Westbound				S 32nd St Northbound				5th Ave S Eastbound				
Start Time	Left	Thru	Right	App. Total	Left	Thru	Right	App. Total	Left	Thru	Right	App. Total	Left	Thru	Right	App. Total	Int. Total
07:00 AM	54	12	9	75	3	31	40	74	1	4	14	19	3	53	5	61	229
07:15 AM	55	15	12	82	14	51	45	110	3	8	17	28	9	44	3	56	276
07:30 AM	71	17	26	114	8	62	64	134	2	17	14	33	11	51	5	67	348
07:45 AM	76	35	27	138	10	77	55	142	7	38	13	58	17	50	6	73	411
Total	256	79	74	409	35	221	204	460	13	67	58	138	40	198	19	257	1264
08:00 AM	64	19	17	100	5	48	40	93	8	13	18	39	9	50	10	69	301
08:15 AM	46	15	6	67	6	68	37	111	4	9	11	24	3	54	6	63	265
08:30 AM	33	12	8	53	15	66	58	139	5	10	19	34	4	54	8	66	292
08:45 AM	38	13	5	56	10	65	46	121	5	10	15	30	2	51	7	60	267
Total	181	59	36	276	36	247	181	464	22	42	63	127	18	209	31	258	1125
09:00 AM	0	0	0	0	0	0	0	0	0	1	0	1	0	0	0	0	1
Total	0	0	0	0	0	0	0	0	0	1	0	1	0	0	0	0	1
11:30 AM	53	10	17	80	19	85	37	141	9	10	12	31	17	66	4	87	339
11:45 AM	43	11	16	70	11	104	54	169	12	12	5	29	19	96	7	122	390
Total	96	21	33	150	30	189	91	310	21	22	17	60	36	162	11	209	729
12:00 PM	53	4	22	79	17	112	56	185	13	21	2	36	12	86	5	103	403
12:15 PM	51	10	18	79	7	87	55	149	14	10	0	24	10	102	5	117	369
12:30 PM	67	11	13	91	10	82	41	133	10	7	0	17	14	104	15	133	374
12:45 PM	68	11	14	93	4	92	62	158	8	8	1	17	14	92	11	117	385
Total	239	36	67	342	38	373	214	625	45	46	3	94	50	384	36	470	1531
01:00 PM	76	8	11	95	3	66	55	124	6	14	0	20	15	73	9	97	336
01:15 PM	45	7	11	63	0	91	50	141	9	11	0	20	10	82	10	102	326
Total	121	15	22	158	3	157	105	265	15	25	0	40	25	155	19	199	662
03:00 PM	0	13	14	27	0	106	28	134	0	0	0	0	17	93	6	116	277
03:15 PM	0	17	15	32	0	81	26	107	0	0	0	0	12	85	13	110	249
03:30 PM	0	37	35	72	0	83	25	108	0	0	0	0	25	92	6	123	303
03:45 PM	0	21	16	37	0	94	40	134	0	0	0	0	8	61	6	75	246
Total	0	88	80	168	0	364	119	483	0	0	0	0	62	331	31	424	1075
04:00 PM	0	10	12	22	0	79	82	161	0	0	0	0	12	74	5	91	274
04:15 PM	0	18	7	25	0	73	76	149	0	0	0	0	15	84	7	106	280
04:30 PM	0	10	8	18	0	82	88	170	0	0	0	0	13	78	6	97	285
04:45 PM	0	16	15	31	0	69	81	150	0	0	0	0	13	74	6	93	274
Total	0	54	42	96	0	303	327	630	0	0	0	0	53	310	24	387	1113
05:00 PM	0	13	14	27	0	105	120	225	0	0	0	0	24	101	7	132	384
05:15 PM	0	9	12	21	0	91	94	185	0	0	0	0	32	69	5	106	312
05:30 PM	0	7	9	16	0	76	84	160	0	0	0	0	23	88	5	116	292
05:45 PM	0	17	20	37	0	77	72	149	0	0	0	0	16	65	3	84	270
Total	0	46	55	101	0	349	370	719	0	0	0	0	95	323	20	438	1258
Grand Total	893	398	409	1700	142	2203	1611	3956	116	203	141	460	379	2072	191	2642	8758
Apprch %	52.5	23.4	24.1		3.6	55.7	40.7		25.2	44.1	30.7		14.3	78.4	7.2		
Total %	10.2	4.5	4.7	19.4	1.6	25.2	18.4	45.2	1.3	2.3	1.6	5.3	4.3	23.7	2.2	30.2	
Car	866	372	386	1624	104	2095	1539	3738	93	193	115	401	365	1941	160	2466	8229
% Car	97	93.5	94.4	95.5	73.2	95.1	95.5	94.5	80.2	95.1	81.6	87.2	96.3	93.7	83.8	93.3	94
Truck	27	26	23	76	38	108	72	218	23	10	26	59	14	131	31	176	529
% Truck	3	6.5	5.6	4.5	26.8	4.9	4.5	5.5	19.8	4.9	18.4	12.8	3.7	6.3	16.2	6.7	6

5th Ave S & S 32nd St
Fort Dodge Traffic Signal Improvements
Traffic Counts
Fort Dodge, Iowa

File Name : 532-5th S & S 32nd
Site Code : 5th Ave S & S 32nd St
Start Date : 9/4/2014
Page No : 2

	S 32nd St Southbound				5th Ave S Westbound				S 32nd St Northbound				5th Ave S Eastbound				
Start Time	Left	Thru	Right	App. Total	Left	Thru	Right	App. Total	Left	Thru	Right	App. Total	Left	Thru	Right	App. Total	Int. Total
Peak Hour Analysis From 07:00 AM to 09:45 AM - Peak 1 of 1																	
Peak Hour for Entire Intersection Begins at 07:15 AM																	
07:15 AM	55	15	12	82	**14**	51	45	110	3	8	17	28	9	44	3	56	276
07:30 AM	71	17	26	114	8	62	**64**	134	2	17	14	33	11	**51**	5	67	348
07:45 AM	**76**	**35**	**27**	**138**	10	**77**	55	**142**	7	**38**	13	**58**	**17**	50	6	**73**	**411**
08:00 AM	64	19	17	100	5	48	40	93	**8**	13	**18**	39	9	50	**10**	69	301
Total Volume	266	86	82	434	37	238	204	479	20	76	62	158	46	195	24	265	1336
% App. Total	61.3	19.8	18.9		7.7	49.7	42.6		12.7	48.1	39.2		17.4	73.6	9.1		
PHF	.875	.614	.759	.786	.661	.773	.797	.843	.625	.500	.861	.681	.676	.956	.600	.908	.813

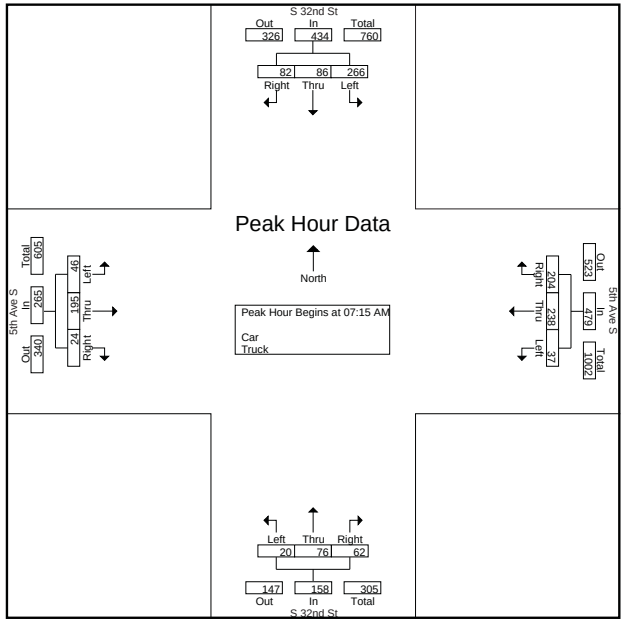

5th Ave S & S 32nd St
Fort Dodge Traffic Signal Improvements
Traffic Counts
Fort Dodge, Iowa

File Name : 532-5th S & S 32nd
Site Code : 5th Ave S & S 32nd St
Start Date : 9/4/2014
Page No : 3

	S 32nd St Southbound				5th Ave S Westbound				S 32nd St Northbound				5th Ave S Eastbound				
Start Time	Left	Thru	Right	App. Total	Left	Thru	Right	App. Total	Left	Thru	Right	App. Total	Left	Thru	Right	App. Total	Int. Total
Peak Hour Analysis From 10:00 AM to 01:45 PM - Peak 1 of 1																	
Peak Hour for Entire Intersection Begins at 11:45 AM																	
11:45 AM	43	**11**	16	70	11	104	54	169	12	12	**5**	29	**19**	96	7	122	390
12:00 PM	53	4	**22**	79	**17**	**112**	**56**	**185**	13	**21**	2	**36**	12	86	5	103	**403**
12:15 PM	51	10	18	79	7	87	55	149	**14**	10	0	24	10	102	5	117	369
12:30 PM	**67**	11	13	**91**	10	82	41	133	10	7	0	17	14	**104**	**15**	**133**	374
Total Volume	214	36	69	319	45	385	206	636	49	50	7	106	55	388	32	475	1536
% App. Total	67.1	11.3	21.6		7.1	60.5	32.4		46.2	47.2	6.6		11.6	81.7	6.7		
PHF	.799	.818	.784	.876	.662	.859	.920	.859	.875	.595	.350	.736	.724	.933	.533	.893	.953

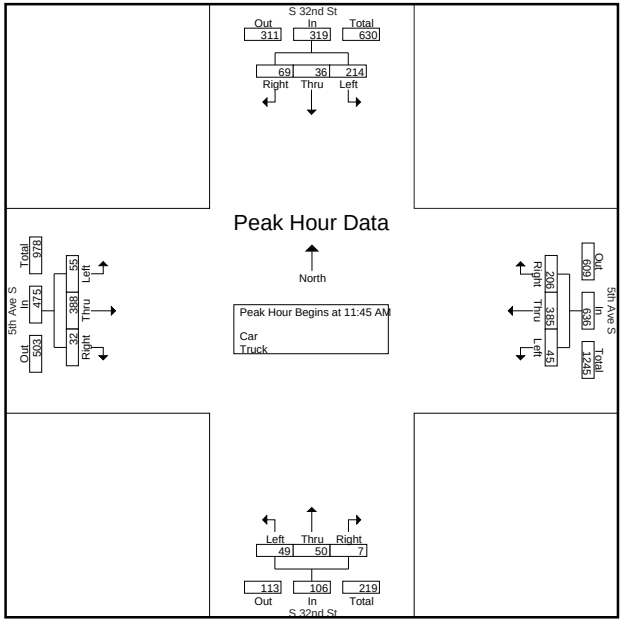

5th Ave S & S 32nd St
Fort Dodge Traffic Signal Improvements
Traffic Counts
Fort Dodge, Iowa

File Name : 532-5th S & S 32nd
Site Code : 5th Ave S & S 32nd St
Start Date : 9/4/2014
Page No : 4

	S 32nd St Southbound				5th Ave S Westbound				S 32nd St Northbound				5th Ave S Eastbound				
Start Time	Left	Thru	Right	App. Total	Left	Thru	Right	App. Total	Left	Thru	Right	App. Total	Left	Thru	Right	App. Total	Int. Total
Peak Hour Analysis From 02:00 PM to 05:45 PM - Peak 1 of 1																	
Peak Hour for Entire Intersection Begins at 04:45 PM																	
04:45 PM	0	**16**	**15**	**31**	0	69	81	150	0	0	0	0	13	74	6	93	274
05:00 PM	0	13	14	27	0	**105**	**120**	**225**	0	0	0	0	24	**101**	**7**	**132**	**384**
05:15 PM	0	9	12	21	0	91	94	185	0	0	0	0	**32**	69	5	106	312
05:30 PM	0	7	9	16	0	76	84	160	0	0	0	0	23	88	5	116	292
Total Volume	0	45	50	95	0	341	379	720	0	0	0	0	92	332	23	447	1262
% App. Total	0	47.4	52.6		0	47.4	52.6		0	0	0		20.6	74.3	5.1		
PHF	.000	.703	.833	.766	.000	.812	.790	.800	.000	.000	.000	.000	.719	.822	.821	.847	.822

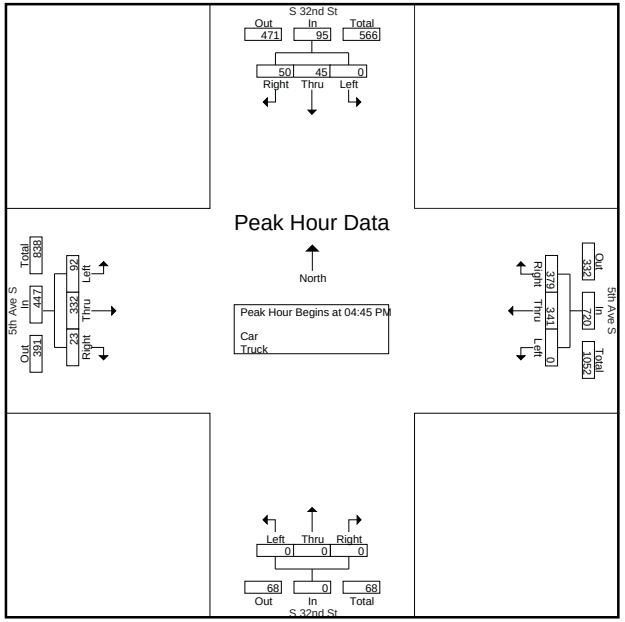

CLICK TO RETURN TO COUNT MAP

5th Ave S & Midway Blvd
Fort Dodge Traffic Signal Improvements
Traffic Counts
Fort Dodge, Iowa

File Name : 534-5th S & Midway
Site Code : 5th Ave S & Midway Blvd
Start Date : 9/4/2014
Page No : 1

Groups Printed- Car - Truck

	5th Ave S Westbound			Midway Blvd Northbound			5th Ave S Eastbound			
Start Time	Left	Thru	App. Total	Left	Right	App. Total	Thru	Right	App. Total	Int. Total
07:00 AM	3	72	75	7	0	7	73	22	95	177
07:15 AM	3	81	84	10	1	11	77	29	106	201
07:30 AM	3	133	136	6	0	6	84	19	103	245
07:45 AM	5	118	123	6	1	7	87	25	112	242
Total	14	404	418	29	2	31	321	95	416	865
08:00 AM	3	76	79	8	2	10	86	16	102	191
08:15 AM	1	83	84	11	2	13	69	15	84	181
08:30 AM	2	111	113	16	1	17	77	12	89	219
08:45 AM	1	75	76	15	0	15	49	20	69	160
Total	7	345	352	50	5	55	281	63	344	751
09:00 AM	2	76	78	19	1	20	59	10	69	167
09:15 AM	3	77	80	22	1	23	57	14	71	174
09:30 AM	1	77	78	23	3	26	80	11	91	195
09:45 AM	2	81	83	9	2	11	52	12	64	158
Total	8	311	319	73	7	80	248	47	295	694
10:00 AM	3	62	65	19	1	20	62	19	81	166
10:15 AM	3	76	79	22	3	25	70	14	84	188
10:30 AM	2	66	68	16	2	18	75	13	88	174
10:45 AM	3	86	89	16	2	18	59	23	82	189
Total	11	290	301	73	8	81	266	69	335	717
11:00 AM	5	70	75	18	0	18	64	19	83	176
11:15 AM	0	73	73	16	4	20	80	10	90	183
11:30 AM	0	101	101	15	1	16	67	16	83	200
11:45 AM	3	88	91	22	1	23	83	24	107	221
Total	8	332	340	71	6	77	294	69	363	780
12:00 PM	0	112	112	27	3	30	72	21	93	235
12:15 PM	2	78	80	20	1	21	91	17	108	209
12:30 PM	2	71	73	14	1	15	104	26	130	218
12:45 PM	0	84	84	11	2	13	93	21	114	211
Total	4	345	349	72	7	79	360	85	445	873
01:00 PM	3	67	70	18	1	19	120	19	139	228
01:15 PM	2	103	105	13	1	14	79	23	102	221
01:30 PM	0	73	73	22	3	25	99	18	117	215
01:45 PM	4	71	75	14	1	15	90	9	99	189
Total	9	314	323	67	6	73	388	69	457	853
02:00 PM	1	65	66	12	2	14	99	15	114	194
02:15 PM	5	74	79	17	1	18	104	14	118	215
02:30 PM	1	78	79	13	1	14	111	17	128	221
02:45 PM	2	92	94	24	2	26	77	17	94	214
Total	9	309	318	66	6	72	391	63	454	844
03:00 PM	3	75	78	18	3	21	98	24	122	221
03:15 PM	0	72	72	18	1	19	81	21	102	193
03:30 PM	1	85	86	28	1	29	104	20	124	239
03:45 PM	0	111	111	17	2	19	117	24	141	271
Total	4	343	347	81	7	88	400	89	489	924
04:00 PM	0	94	94	27	0	27	114	19	133	254
04:15 PM	3	89	92	21	3	24	114	22	136	252
04:30 PM	2	102	104	30	2	32	93	17	110	246
04:45 PM	1	84	85	19	2	21	92	14	106	212
Total	6	369	375	97	7	104	413	72	485	964
05:00 PM	2	149	151	21	1	22	117	23	140	313
05:15 PM	1	102	103	21	1	22	89	19	108	233
05:30 PM	3	102	105	22	1	23	99	21	120	248
05:45 PM	2	80	82	26	1	27	77	28	105	214
Total	8	433	441	90	4	94	382	91	473	1008

5th Ave S & Midway Blvd
Fort Dodge Traffic Signal Improvements
Traffic Counts
Fort Dodge, Iowa

File Name : 534-5th S & Midway
Site Code : 5th Ave S & Midway Blvd
Start Date : 9/4/2014
Page No : 2

Groups Printed- Car - Truck

	5th Ave S Westbound			Midway Blvd Northbound			5th Ave S Eastbound			
	Left	Thru	App. Total	Left	Right	App. Total	Thru	Right	App. Total	Int. Total
Grand Total	88	3795	3883	769	65	834	3744	812	4556	9273
Apprch %	2.3	97.7		92.2	7.8		82.2	17.8		
Total %	0.9	40.9	41.9	8.3	0.7	9	40.4	8.8	49.1	
Car	61	3422	3483	721	47	768	3393	753	4146	8397
% Car	69.3	90.2	89.7	93.8	72.3	92.1	90.6	92.7	91	90.6
Truck	27	373	400	48	18	66	351	59	410	876
% Truck	30.7	9.8	10.3	6.2	27.7	7.9	9.4	7.3	9	9.4

5th Ave S & Midway Blvd
Fort Dodge Traffic Signal Improvements
Traffic Counts
Fort Dodge, Iowa

File Name : 534-5th S & Midway
Site Code : 5th Ave S & Midway Blvd
Start Date : 9/4/2014
Page No : 3

	5th Ave S Westbound			Midway Blvd Northbound			5th Ave S Eastbound			
Start Time	Left	Thru	App. Total	Left	Right	App. Total	Thru	Right	App. Total	Int. Total
Peak Hour Analysis From 07:00 AM to 09:45 AM - Peak 1 of 1										
Peak Hour for Entire Intersection Begins at 07:15 AM										
07:15 AM	3	81	84	**10**	1	**11**	77	**29**	106	201
07:30 AM	3	**133**	**136**	6	0	6	84	19	103	**245**
07:45 AM	**5**	118	123	6	1	7	**87**	25	**112**	242
08:00 AM	3	76	79	8	**2**	10	86	16	102	191
Total Volume	14	408	422	30	4	34	334	89	423	879
% App. Total	3.3	96.7		88.2	11.8		79	21		
PHF	.700	.767	.776	.750	.500	.773	.960	.767	.944	.897

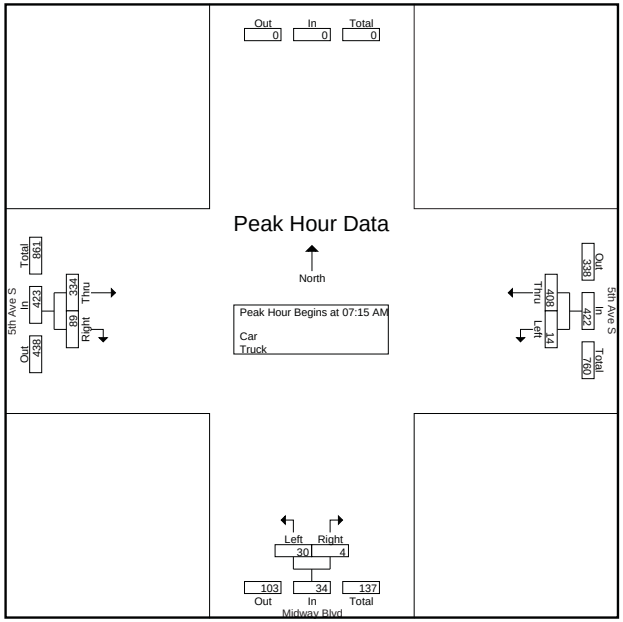

5th Ave S & Midway Blvd
Fort Dodge Traffic Signal Improvements
Traffic Counts
Fort Dodge, Iowa

File Name : 534-5th S & Midway
Site Code : 5th Ave S & Midway Blvd
Start Date : 9/4/2014
Page No : 4

	5th Ave S Westbound			Midway Blvd Northbound			5th Ave S Eastbound			
Start Time	Left	Thru	App. Total	Left	Right	App. Total	Thru	Right	App. Total	Int. Total
Peak Hour Analysis From 10:00 AM to 01:45 PM - Peak 1 of 1										
Peak Hour for Entire Intersection Begins at 11:45 AM										
11:45 AM	**3**	88	91	22	1	23	83	24	107	221
12:00 PM	0	**112**	**112**	**27**	**3**	**30**	72	21	93	**235**
12:15 PM	2	78	80	20	1	21	91	17	108	209
12:30 PM	2	71	73	14	1	15	**104**	**26**	**130**	218
Total Volume	7	349	356	83	6	89	350	88	438	883
% App. Total	2	98		93.3	6.7		79.9	20.1		
PHF	.583	.779	.795	.769	.500	.742	.841	.846	.842	.939

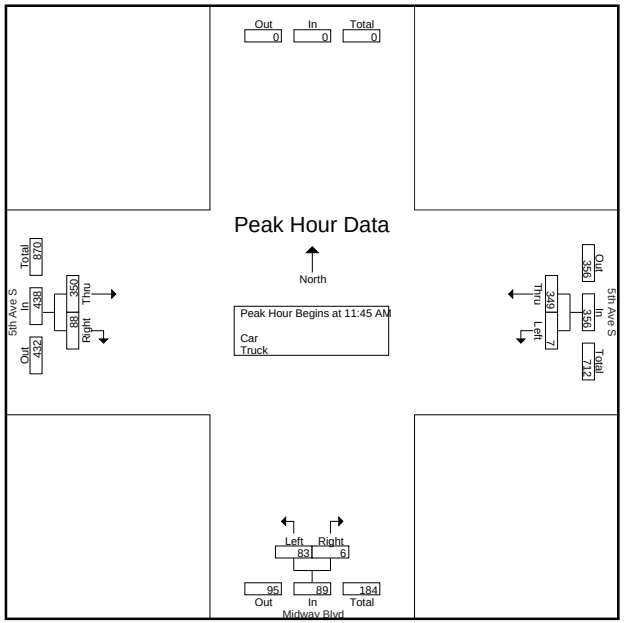

5th Ave S & Midway Blvd
Fort Dodge Traffic Signal Improvements
Traffic Counts
Fort Dodge, Iowa

File Name : 534-5th S & Midway
Site Code : 5th Ave S & Midway Blvd
Start Date : 9/4/2014
Page No : 5

	5th Ave S Westbound			Midway Blvd Northbound			5th Ave S Eastbound			
Start Time	Left	Thru	App. Total	Left	Right	App. Total	Thru	Right	App. Total	Int. Total
Peak Hour Analysis From 02:00 PM to 05:45 PM - Peak 1 of 1										
Peak Hour for Entire Intersection Begins at 03:45 PM										
03:45 PM	0	**111**	**111**	17	2	19	**117**	**24**	**141**	**271**
04:00 PM	0	94	94	27	0	27	114	19	133	254
04:15 PM	**3**	89	92	21	**3**	24	114	22	136	252
04:30 PM	2	102	104	**30**	2	**32**	93	17	110	246
Total Volume	5	396	401	95	7	102	438	82	520	1023
% App. Total	1.2	98.8		93.1	6.9		84.2	15.8		
PHF	.417	.892	.903	.792	.583	.797	.936	.854	.922	.944

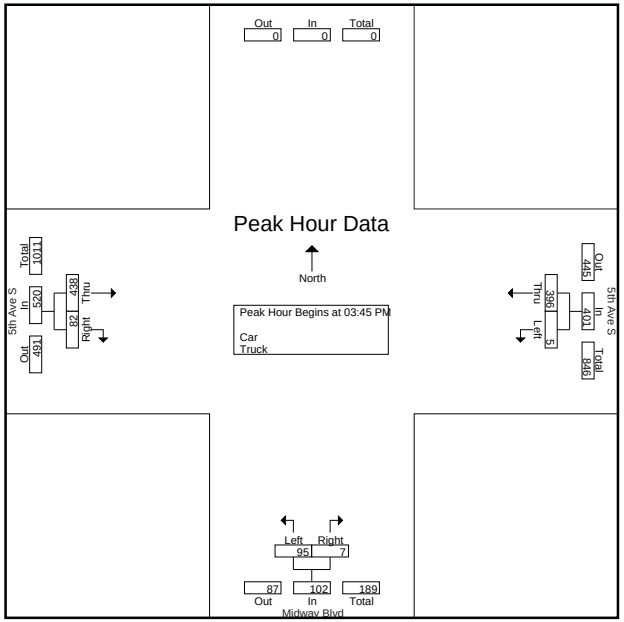

CLICK TO RETURN TO COUNT MAP

5th Ave S & S 42nd St
Fort Dodge Traffic Signal Improvements
Traffic Counts
Fort Dodge, Iowa

File Name : 535-5th S & S 42nd
Site Code :
Start Date : 10/23/2014
Page No : 1

Groups Printed- Lights - Mediums - Articulated Trucks - Bicycles on Road

	S 42nd St Southbound				5th Ave S Westbound				S 42nd St Northbound				5th Ave S Eastbound				
Start Time	Left	Thru	Right	App. Total	Left	Thru	Right	App. Total	Left	Thru	Right	App. Total	Left	Thru	Right	App. Total	Int. Total
07:00 AM	0	2	0	2	4	23	2	29	36	1	5	42	8	23	28	59	132
07:15 AM	0	0	2	2	1	27	1	29	54	1	6	61	3	32	35	70	162
07:30 AM	0	1	0	1	6	36	0	42	83	1	2	86	9	25	30	64	193
07:45 AM	0	0	3	3	2	46	2	50	74	5	2	81	15	18	35	68	202
Total	0	3	5	8	13	132	5	150	247	8	15	270	35	98	128	261	689
08:00 AM	0	1	4	5	6	21	0	27	45	2	3	50	7	17	29	53	135
08:15 AM	0	0	0	0	0	25	0	25	44	2	4	50	3	27	25	55	130
08:30 AM	0	0	3	3	1	20	0	21	48	0	1	49	4	19	40	63	136
08:45 AM	0	2	2	4	2	29	1	32	49	3	3	55	1	13	40	54	145
Total	0	3	9	12	9	95	1	105	186	7	11	204	15	76	134	225	546
09:00 AM	0	1	2	3	0	27	0	27	38	3	7	48	2	22	30	54	132
09:15 AM	0	1	4	5	3	22	0	25	38	0	2	40	1	27	30	58	128
09:30 AM	0	1	1	2	3	25	1	29	40	1	4	45	1	15	34	50	126
09:45 AM	0	0	1	1	3	28	0	31	45	0	5	50	7	19	30	56	138
Total	0	3	8	11	9	102	1	112	161	4	18	183	11	83	124	218	524
10:00 AM	0	1	3	4	1	28	0	29	42	1	1	44	2	20	43	65	142
10:15 AM	0	3	3	6	4	21	0	25	40	3	5	48	1	26	44	71	150
10:30 AM	0	1	3	4	2	37	1	40	27	0	1	28	4	27	35	66	138
10:45 AM	0	1	1	2	3	26	0	29	41	0	3	44	2	30	46	78	153
Total	0	6	10	16	10	112	1	123	150	4	10	164	9	103	168	280	583
11:00 AM	0	0	6	6	1	23	0	24	37	0	2	39	1	20	35	56	125
11:15 AM	0	0	3	3	3	32	1	36	46	1	4	51	4	26	50	80	170
11:30 AM	0	1	21	22	3	48	1	52	57	1	2	60	2	32	40	74	208
11:45 AM	0	1	9	10	1	44	0	45	51	2	3	56	6	28	48	82	193
Total	0	2	39	41	8	147	2	157	191	4	11	206	13	106	173	292	696
12:00 PM	0	0	14	14	3	33	0	36	59	2	3	64	5	33	40	78	192
12:15 PM	0	1	4	5	2	29	1	32	45	1	1	47	11	30	45	86	170
12:30 PM	0	1	12	13	2	29	0	31	48	2	3	53	8	28	50	86	183
12:45 PM	1	4	5	10	2	30	1	33	40	1	4	45	15	38	69	122	210
Total	1	6	35	42	9	121	2	132	192	6	11	209	39	129	204	372	755
01:00 PM	2	0	3	5	3	29	0	32	35	1	4	40	15	35	52	102	179
01:15 PM	0	1	5	6	2	26	0	28	42	2	4	48	10	30	55	95	177
01:30 PM	1	1	5	7	1	27	0	28	40	0	2	42	1	26	56	83	160
01:45 PM	1	3	2	6	4	20	0	24	37	3	5	45	1	39	47	87	162
Total	4	5	15	24	10	102	0	112	154	6	15	175	27	130	210	367	678
02:00 PM	0	0	2	2	3	28	1	32	55	1	1	57	4	36	61	101	192
02:15 PM	0	3	2	5	5	33	0	38	37	3	4	44	6	45	60	111	198
02:30 PM	0	0	1	1	3	22	0	25	51	3	1	55	4	34	56	94	175
02:45 PM	1	0	0	1	2	29	0	31	18	3	3	24	6	30	61	97	153
Total	1	3	5	9	13	112	1	126	161	10	9	180	20	145	238	403	718
03:00 PM	1	2	3	6	3	22	2	27	50	1	7	58	3	31	67	101	192
03:15 PM	2	3	4	9	2	25	0	27	52	2	0	54	3	20	69	92	182
03:30 PM	2	3	7	12	3	18	2	23	40	2	3	45	2	35	67	104	184
03:45 PM	0	1	7	8	0	47	0	47	37	3	1	41	4	36	83	123	219
Total	5	9	21	35	8	112	4	124	179	8	11	198	12	122	286	420	777
04:00 PM	2	2	9	13	5	37	0	42	52	2	4	58	2	34	71	107	220
04:15 PM	1	0	5	6	2	29	0	31	47	1	1	49	0	41	80	121	207
04:30 PM	0	0	9	9	1	43	0	44	53	1	8	62	4	30	62	96	211
04:45 PM	1	3	7	11	4	35	0	39	60	0	3	63	0	24	53	77	190
Total	4	5	30	39	12	144	0	156	212	4	16	232	6	129	266	401	828
05:00 PM	7	8	35	50	1	49	0	50	69	2	7	78	1	46	89	136	314
05:15 PM	1	6	5	12	6	26	0	32	72	1	5	78	1	36	83	120	242
05:30 PM	0	2	7	9	9	32	0	41	60	0	3	63	1	33	63	97	210
05:45 PM	0	0	2	2	5	29	0	34	68	1	2	71	2	29	56	87	194
Total	8	16	49	73	21	136	0	157	269	4	17	290	5	144	291	440	960
Grand Total	23	61	226	310	122	1315	17	1454	2102	65	144	2311	192	1265	2222	3679	7754
Apprch %	7.4	19.7	72.9		8.4	90.4	1.2		91	2.8	6.2		5.2	34.4	60.4		
Total %	0.3	0.8	2.9	4	1.6	17	0.2	18.8	27.1	0.8	1.9	29.8	2.5	16.3	28.7	47.4	

5th Ave S & S 42nd St
Fort Dodge Traffic Signal Improvements
Traffic Counts
Fort Dodge, Iowa

File Name : 535-5th S & S 42nd
Site Code :
Start Date : 10/23/2014
Page No : 2

Groups Printed- Lights - Mediums - Articulated Trucks - Bicycles on Road

	S 42nd St Southbound				5th Ave S Westbound				S 42nd St Northbound				5th Ave S Eastbound				
	Left	Thru	Right	App. Total	Left	Thru	Right	App. Total	Left	Thru	Right	App. Total	Left	Thru	Right	App. Total	Int. Total
Lights	17	32	188	237	75	1185	9	1269	1924	27	87	2038	154	1156	2052	3362	6906
% Lights	73.9	52.5	83.2	76.5	61.5	90.1	52.9	87.3	91.5	41.5	60.4	88.2	80.2	91.4	92.3	91.4	89.1
Mediums	4	4	20	28	7	45	8	60	80	3	11	94	21	44	80	145	327
% Mediums	17.4	6.6	8.8	9	5.7	3.4	47.1	4.1	3.8	4.6	7.6	4.1	10.9	3.5	3.6	3.9	4.2
Articulated Trucks	2	25	18	45	40	85	0	125	98	35	46	179	17	65	90	172	521
% Articulated Trucks	8.7	41	8	14.5	32.8	6.5	0	8.6	4.7	53.8	31.9	7.7	8.9	5.1	4.1	4.7	6.7
Bicycles on Road	0	0	0	0	0	0	0	0	0	0	0	0	0	0	0	0	0
% Bicycles on Road	0	0	0	0	0	0	0	0	0	0	0	0	0	0	0	0	0

5th Ave S & S 42nd St
Fort Dodge Traffic Signal Improvements
Traffic Counts
Fort Dodge, Iowa

File Name : 535-5th S & S 42nd
Site Code :
Start Date : 10/23/2014
Page No : 3

	S 42nd St Southbound				5th Ave S Westbound				S 42nd St Northbound				5th Ave S Eastbound				
Start Time	Left	Thru	Right	App. Total	Left	Thru	Right	App. Total	Left	Thru	Right	App. Total	Left	Thru	Right	App. Total	Int. Total
Peak Hour Analysis From 07:00 AM to 09:45 AM - Peak 1 of 1																	
Peak Hour for Entire Intersection Begins at 07:15 AM																	
07:15 AM	0	0	2	2	1	27	1	29	54	1	**6**	61	3	**32**	**35**	**70**	162
07:30 AM	0	**1**	0	1	**6**	36	0	42	**83**	1	2	**86**	9	25	30	64	193
07:45 AM	0	0	3	3	2	**46**	**2**	**50**	74	**5**	2	81	**15**	18	35	68	**202**
08:00 AM	0	1	**4**	**5**	6	21	0	27	45	2	3	50	7	17	29	53	135
Total Volume	0	2	9	11	15	130	3	148	256	9	13	278	34	92	129	255	692
% App. Total	0	18.2	81.8		10.1	87.8	2		92.1	3.2	4.7		13.3	36.1	50.6		
PHF	.000	.500	.563	.550	.625	.707	.375	.740	.771	.450	.542	.808	.567	.719	.921	.911	.856

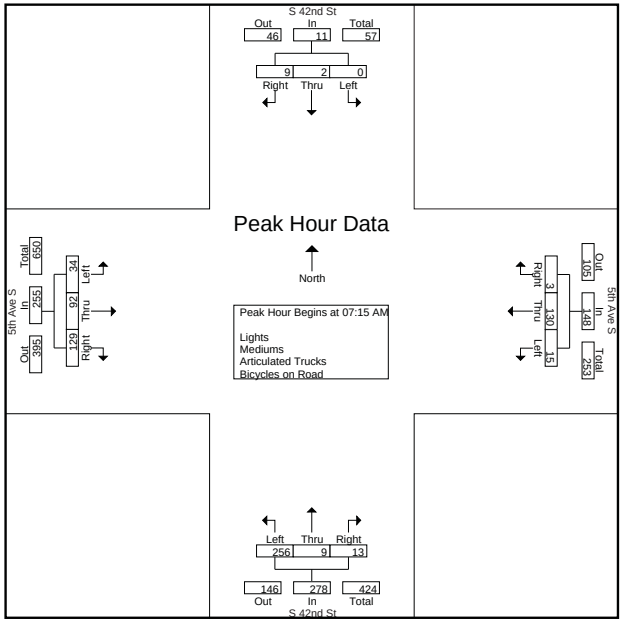

5th Ave S & S 42nd St
Fort Dodge Traffic Signal Improvements
Traffic Counts
Fort Dodge, Iowa

File Name : 535-5th S & S 42nd
Site Code :
Start Date : 10/23/2014
Page No : 4

	S 42nd St Southbound				5th Ave S Westbound				S 42nd St Northbound				5th Ave S Eastbound				
Start Time	Left	Thru	Right	App. Total	Left	Thru	Right	App. Total	Left	Thru	Right	App. Total	Left	Thru	Right	App. Total	Int. Total
Peak Hour Analysis From 10:00 AM to 01:45 PM - Peak 1 of 1																	
Peak Hour for Entire Intersection Begins at 11:15 AM																	
11:15 AM	0	0	3	3	**3**	32	**1**	36	46	1	**4**	51	4	26	**50**	80	170
11:30 AM	0	**1**	**21**	**22**	3	**48**	1	**52**	57	1	2	60	2	32	40	74	**208**
11:45 AM	0	1	9	10	1	44	0	45	51	**2**	3	56	**6**	28	48	**82**	193
12:00 PM	0	0	14	14	3	33	0	36	**59**	2	3	**64**	5	**33**	40	78	192
Total Volume	0	2	47	49	10	157	2	169	213	6	12	231	17	119	178	314	763
% App. Total	0	4.1	95.9		5.9	92.9	1.2		92.2	2.6	5.2		5.4	37.9	56.7		
PHF	.000	.500	.560	.557	.833	.818	.500	.813	.903	.750	.750	.902	.708	.902	.890	.957	.917

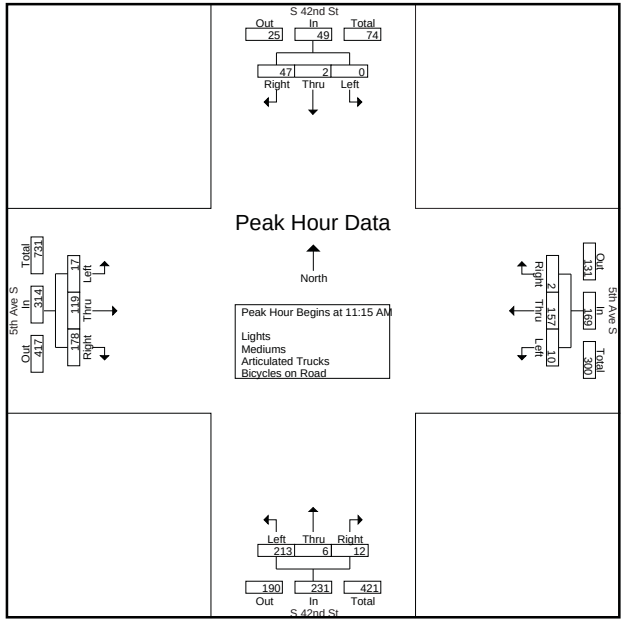

5th Ave S & S 42nd St
Fort Dodge Traffic Signal Improvements
Traffic Counts
Fort Dodge, Iowa

File Name : 535-5th S & S 42nd
Site Code :
Start Date : 10/23/2014
Page No : 5

	S 42nd St Southbound				5th Ave S Westbound				S 42nd St Northbound				5th Ave S Eastbound				
Start Time	Left	Thru	Right	App. Total	Left	Thru	Right	App. Total	Left	Thru	Right	App. Total	Left	Thru	Right	App. Total	Int. Total
Peak Hour Analysis From 02:00 PM to 05:45 PM - Peak 1 of 1																	
Peak Hour for Entire Intersection Begins at 05:00 PM																	
05:00 PM	**7**	**8**	**35**	**50**	1	**49**	0	**50**	69	**2**	**7**	**78**	1	**46**	**89**	**136**	**314**
05:15 PM	1	6	5	12	6	26	0	32	**72**	1	5	78	1	36	83	120	242
05:30 PM	0	2	7	9	**9**	32	0	41	60	0	3	63	1	33	63	97	210
05:45 PM	0	0	2	2	5	29	0	34	68	1	2	71	**2**	29	56	87	194
Total Volume	8	16	49	73	21	136	0	157	269	4	17	290	5	144	291	440	960
% App. Total	11	21.9	67.1		13.4	86.6	0		92.8	1.4	5.9		1.1	32.7	66.1		
PHF	.286	.500	.350	.365	.583	.694	.000	.785	.934	.500	.607	.929	.625	.783	.817	.809	.764

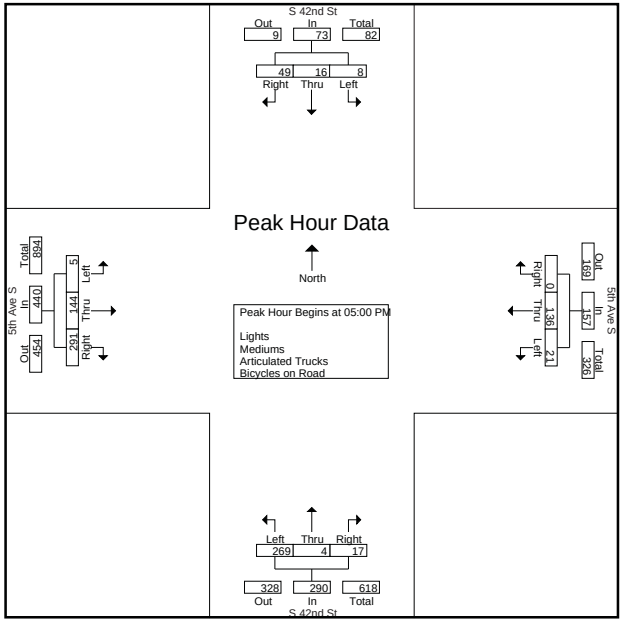

CLICK TO RETURN TO INDEX PAGE

Fort Dodge Traffic Signal Inventory
Cost Estimate Summary - Signal Improvements

Item	Unit	Cost/unit
Install Pushbutton Sign	EA	$50
Touch-up Paint on Pole	EA	$100
Remove Lane Configuration Sign and Bracket on Mast Arm	EA	$100
Replace Signal Visor	EA	$100
Install Backplate	EA	$150
Remove Right Turn Arrows	LS	$250
Replace LED Lens	EA	$250
Replace Ped Pushbutton and Sign	EA	$300
Remove/Relocate Yield Sign	EA	$500
Install Lane Control Sign on Mast Arm	LS	$500
Install Lane Control Sign including Wood Post	LS	$600
Install Street Name Sign	EA	$650
Implement Countdown Pedestrian Signal	EA	$800
Install additional Signal Head	EA	$800
Replace Optically Limiting Signal Head with Standard Head	EA	$1,250
Relocate Pedestrian Pushbuttons to next to Sidewalk	EA	$2,000
Remove Mast Arm Pole & Footing	LS	$3,000
Relocate Existing Signal Pole	LS	$5,000
Replace Controller	EA	$7,500
Network Communication Equipment	LS	$8,000
Install Battery Back-up System	LS	$8,000
Replace Signal Pole	EA	$10,000

Fort Dodge Traffic Signal Inventory
Cost Estimate Summary - Signal Improvements

Item	Unit	Cost/unit
Remove Traffic Signal	LS	$15,000
Install Emergency Vehicle Pre-Emption *	LS	$18,000
Replace Controller and Cabinet	LS	$20,000
Implement Flashing Yellow Arrows	LS	$30,000
Install Video Detection	LS	$35,000
New Traffic Signal	LS	$200,000

* - Depends on System and Intersection, assumes 4 approach intersection and infared detetctions. Additional cost per vehicle

CLICK TO RETURN TO INDEX PAGE

Fort Dodge Traffic Signal Inventory
Cost Estimate Summary - Signal Improvements

Intersection	Item	Period for Modification		
		Short-Term (0-2 Years)	Mid-Term (2-5 Years)	Long-Term (5-15 Years)
General	Maintain Existing Signs - Establish policy to replace signs (MUTCD requirement) *	$20,000	$30,000	$100,000
	Replace Damaged Pedestrian Pushbuttons and Signs #	$8,000	$12,000	$40,000
	Update Yellow Clearance, All Red, & Ped Clearance timings ^	$1,700		
Total		$29,700	$42,000	$140,000

Assumptions:
* - Replace 8 traffic signs at 4 intersections per year
# - 16 pushbuttons & signs per year
^ - 30 minutes per intersection at $100/hr
Annual Maintenance - 4 hrs of work at $100/hr at each intersection per year ($14,000/yr, included with each intersection

Fort Dodge Traffic Signal Inventory
Cost Estimate Summary - Signal Improvements

Intersection	Item	Period for Modification		
		Short-Term (0-2 Years)	Mid-Term (2-5 Years)	Long-Term (5-15 Years)
101 - US Hwy 169 & Kenyon Rd	Replace Missing Visor	$100		
	Install Street Name Signs	$2,600		
	Implement Flashing Yellow Arrows		$30,000	
	Replace/Upgrade Controller and Cabinet			$20,000
	Annual Maintenance	$800	$1,200	$4,000
Total		$3,500	$31,200	$24,000
102 - US Hwy 169 & Ave O NW	Replace Missing Visor	$100		
	Install signs to designate lane assignments	$1,000		
	Install/Replace Street Name Signs		$2,600	
	Replace/Upgrade Controller and Cabinet			$20,000
	Annual Maintenance	$800	$1,200	$4,000
Total		$1,900	$3,800	$24,000
103 - US Hwy 169 & Triton Circle	Install additional signal head for EB on NE pole	$800		
	Install/Replace Street Name Signs		$2,600	
	Install Battery Back-Up System		$8,000	
	Annual Maintenance	$800	$1,200	$4,000
Total		$1,600	$11,800	$4,000
104 - Kenyon Rd & Tower Dr	Replace Missing Visor	$100		
	Remove 2nd Signal Head on Pedestal Pole		$200	
	Install/Replace Street Name Signs		$1,950	
	Install Battery Back-Up System		$8,000	
	Replace/Upgrade Controller and Cabinet			$20,000
	Annual Maintenance	$800	$1,200	$4,000
Total		$900	$11,350	$24,000
105 - Kenyon Rd & Ave E	Replace Missing Visor	$100		
	Replace Pedestrian Pushbuttons and Signs	$2,400		
	Convert Pedestrian Signals to include Countdown Timers	$6,400		
	Install Lane Control Signs		$2,400	
	Replace Street Name Signs		$2,600	
	Implement Flashing Yellow Arrows		$30,000	
	Annual Maintenance	$800	$1,200	$4,000
Total		$9,700	$36,200	$4,000
106 - Kenyon Rd & Ave C	Replace Street Name Signs		$2,600	
	Implement Flashing Yellow Arrows		$30,000	
	Annual Maintenance	$800	$1,200	$4,000
Total		$800	$33,800	$4,000

Fort Dodge Traffic Signal Inventory
Cost Estimate Summary - Signal Improvements

Intersection	Item	Period for Modification		
		Short-Term (0-2 Years)	Mid-Term (2-5 Years)	Long-Term (5-15 Years)
107 - 2nd Ave S & A St *	Convert Pedestrian Signals to include Countdown Timers	$6,400		
	Replace Street Name Signs		$2,600	
	Remove Traffic Signal		$15,000	
	Replace/Upgrade Controller and Cabinet		$20,000	
	Replace Traffic Signal		$200,000	
	Annual Maintenance	$800	$1,200	$4,000
Total		$7,200	$238,800	$4,000

Zone 1 Total	$25,600	$366,950	$88,000

* - If the 2nd Ave S & A St signal is removed, then the other improvement costs are not needed.

Fort Dodge Traffic Signal Inventory
Cost Estimate Summary - Signal Improvements

Intersection	Item	Period for Modification		
		Short-Term (0-2 Years)	Mid-Term (2-5 Years)	Long-Term (5-15 Years)
208 - 2nd Ave S & S 3rd St *	Install Pedestrian Signals and Pushbuttons	$10,400		
	Replace Damaged Poles	$20,000		
	Install Backplates on Signal Heads (backplates do not exist for current signal heads)	-		
	Replace Street Name Signs		$2,600	
	Install Battery Back-up System		$8,000	
	Replace/Upgrade Controller and Cabinet		$20,000	
	Implement Flashing Yellow Arrows		$30,000	
	Annual Maintenance	$800	$1,200	$4,000
Total		$31,200	$61,800	$4,000
209 - 1st Ave S & S 7th St	New Signal in 2014			
	Annual Maintenance	$800	$1,200	$4,000
Total		$800	$1,200	$4,000
210 - 1st Ave S & S 8th St	New Signal in 2014			
	Annual Maintenance	$800	$1,200	$4,000
Total		$800	$1,200	$4,000
210 - 1st Ave S & S 9th St	New Signal in 2014			
	Annual Maintenance	$800	$1,200	$4,000
Total		$800	$1,200	$4,000
212 - Central Ave & 12th St	Reconstruct Traffic Signal		$200,000	
	Annual Maintenance	$800	$1,200	$4,000
Total		$800	$201,200	$4,000

Zone 2 Total	$34,400	$266,600	$20,000

* - Consider removing traffic signal after completion of the Cross-Town Connector Projects

Fort Dodge Traffic Signal Inventory
Cost Estimate Summary - Signal Improvements

Intersection	Item	Period for Modification		
		Short-Term (0-2 Years)	Mid-Term (2-5 Years)	Long-Term (5-15 Years)
General - 15th St	Convert to 3 lanes with TWLTL *		$1,000,000	
Total		$0	$1,000,000	$0
313 - 1st Ave S & S 15th St	Trim Trees for Pedestrian Head visibility	$500		
	Replace Pedestrian Pushbuttons and Signs	$2,400		
	Install EVP for Fire Station	$10,000		
	Replace Damaged Poles	$20,000		
	Install Backplates on Signal Heads (backplates do not exist for current signal heads)	-		
	Replace Street Name Signs		$2,600	
	Implement Countdown Pedestrian Signals		$6,400	
	Install Video Detection		$35,000	
	Replace/Upgrade Controller and Cabinet			$20,000
	Implement Flashing Yellow Arrows			$30,000
	Relocate/Install new Signal Poles			$60,000
	Annual Maintenance	$800	$1,200	$4,000
Total		$33,700	$45,200	$114,000
314 - Central Ave & 15th St	Replace Pedestrian Pushbuttons and Signs	$2,400		
	Install EVP for Fire Station	$4,000		
	Replace Damaged Poles	$20,000		
	Install Backplates on Signal Heads (backplates do not exist for current signal heads)	-		
	Replace Street Name Signs		$2,600	
	Implement Countdown Pedestrian Signals		$6,400	
	Install Video Detection		$35,000	
	Replace/Upgrade Controller Cabinet			$20,000
	Implement Flashing Yellow Arrows			$30,000
	Relocate/Install new Signal Poles			$60,000
	Annual Maintenance	$800	$1,200	$4,000
Total		$27,200	$45,200	$114,000
315 - 2nd Ave N & N 15th St	Replace Pedestrian Pushbuttons and Signs	$2,400		
	Replace Damaged Poles	$10,000		
	Install Backplates on Signal Heads (backplates do not exist for current signal heads)	-		
	Replace Street Name Signs		$2,600	
	Implement Countdown Pedestrian Signals		$6,400	
	Install Video Detection		$35,000	
	Replace/Upgrade Controller and Cabinet			$20,000
	Implement Flashing Yellow Arrows			$30,000
	Relocate/Install new Signal Poles			$60,000
	Annual Maintenance	$800	$1,200	$4,000
Total		$13,200	$45,200	$114,000

Fort Dodge Traffic Signal Inventory
Cost Estimate Summary - Signal Improvements

Intersection	Item	Period for Modification		
		Short-Term (0-2 Years)	Mid-Term (2-5 Years)	Long-Term (5-15 Years)
316 - 6th Ave N & N 15th St	Remove School Crossing Sign	$100		
	Trim Trees for Pedestrian Head visibility	$500		
	Replace Pedestrian Pushbuttons and Signs	$2,400		
	Install Backplates on Signal Heads (backplates do not exist for current signal heads)	-		
	Replace Street Name Signs		$1,950	
	Implement Countdown Pedestrian Signals		$6,400	
	Install Video Detection		$35,000	
	Replace/Upgrade Controller Cabinet			$20,000
	Annual Maintenance	$800	$1,200	$4,000
Total		$3,800	$44,550	$24,000
317 - 7th Ave N & N 15th St	Remove School Crossing Signs	$100		
	Replace Pedestrian Pushbuttons and Signs	$2,400		
	Replace Damaged/Faded Signs	$2,500		
	Install Backplates on Signal Heads (backplates do not exist for current signal heads)	-		
	Replace Street Name Signs		$1,950	
	Implement Countdown Pedestrian Signals		$6,400	
	Install Video Detection		$35,000	
	Replace/Upgrade Controller and Cabinet			$20,000
	Annual Maintenance	$800	$1,200	$4,000
Total		$5,800	$44,550	$24,000
318 - 20th Ave N & N 15th St	Replace Tipped Pedestal Pole		$1,000	
	Replace Street Name Signs		$2,600	
	Implement Flashing Yellow Arrows			$30,000
	Annual Maintenance	$800	$1,200	$4,000
Total		$800	$4,800	$34,000

Zone 3 Total	$84,500	$1,229,500	$424,000

* - Replaces entire traffic signal at intersections 313, 314, 315, 316, and 317 and includes modifications to 318

Fort Dodge Traffic Signal Inventory
Cost Estimate Summary - Signal Improvements

Intersection	Item	Period for Modification		
		Short-Term	Mid-Term	Long-Term
		(0-2 Years)	(2-5 Years)	(5-15 Years)
419 - 1st Ave S & S 25th St	To be replaced in 2016 - East Region Project			
	Annual Maintenance	$800	$1,200	$4,000
Total		$800	$1,200	$4,000
420 - 1st Ave S & S 29th St	To be replaced in 2017 - East Region Project			
	Annual Maintenance	$800	$1,200	$4,000
Total		$800	$1,200	$4,000
421 - 1st Ave S & S 32nd St	Remove Lane Configuration Signs and Brackets	$200		
	Implement Flashing Yellow Arrows			$30,000
	Annual Maintenance	$800	$1,200	$4,000
Total		$1,000	$1,200	$34,000

Zone 4 Total	$2,600	$3,600	$42,000

Fort Dodge Traffic Signal Inventory
Cost Estimate Summary - Signal Improvements

Intersection	Item	Period for Modification		
		Short-Term (0-2 Years)	Mid-Term (2-5 Years)	Long-Term (5-15 Years)
523 - Kenyon Rd & S 8th St	Install Pushbutton Signs	$200		
	Remove/Relocate Yield Sign in NW Corner	$500		
	Relocate Pedestrian Pushbuttons to next to Sidewalk	$1,250		
	Install Pedestrian Signals, Pushbuttons and Signs for third crossing	$2,500		
	Implement Countdown Pedestrian Signals		$3,200	
	Replace/Upgrade Controller and Cabinet			$20,000
	Implement Flashing Yellow Arrows			$25,000
	Replace Pole Footings to be Flush with Sidewalk			
	Annual Maintenance	$800	$1,200	$4,000
Total		$5,250	$4,400	$49,000
524 - 5th Ave S & S 12th St	Replace Pedestrian Pushbuttons and Signs	$2,400		
	Remove Sign Pole & Place Lane Control Signs on Mast Arm	$3,000		
	Implement Countdown Pedestrian Signals		$6,400	
	Install Video Detection		$35,000	
	Replace/Upgrade Controller and/or Cabinet			$20,000
	Implement Flashing Yellow Arrows			$30,000
	Annual Maintenance	$800	$1,200	$4,000
Total		$6,200	$42,600	$54,000
525 - 5th Ave S & S 15th St	Replace Pedestrian Pushbuttons and Signs	$2,400		
	Implement Countdown Pedestrian Signals		$6,400	
	Install Video Detection		$35,000	
	Replace/Upgrade Controller and/or Cabinet			$20,000
	Implement Flashing Yellow Arrows			$30,000
	Annual Maintenance	$800	$1,200	$4,000
Total		$3,200	$42,600	$54,000
526 - 5th Ave S & S 17th St	Install lane control signs N/S	$1,000		
	Replace Pedestrian Pushbuttons and Signs	$2,400		
	Implement Countdown Pedestrian Signals		$6,400	
	Install Video Detection		$35,000	
	Replace/Upgrade Controller and/or Cabinet			$20,000
	Implement Flashing Yellow Arrows			$30,000
	Annual Maintenance	$800	$1,200	$4,000
Total		$4,200	$42,600	$54,000

Fort Dodge Traffic Signal Inventory
Cost Estimate Summary - Signal Improvements

Intersection	Item	Period for Modification		
		Short-Term (0-2 Years)	Mid-Term (2-5 Years)	Long-Term (5-15 Years)
527 - 5th Ave S & S 21st St	Replace Pedestrian Pushbuttons and Signs	$2,400		
	Implement Countdown Pedestrian Signals		$6,400	
	Replace/Upgrade Controller and/or Cabinet			$20,000
	Implement Flashing Yellow Arrows			$30,000
	Annual Maintenance	$800	$1,200	$4,000
Total		$3,200	$7,600	$54,000
528 - 5th Ave S & S 25th St	Remove Unneeded Lane Configuration Signs and Brackets	$400		
	Replace Optically Limiting Signal Heads	$2,500		
	Install Pushbutton Poles so closer to Sidewalk Ramps	$6,000		
	Touch-up Paint on Poles		$1,000	
	Implement Flashing Yellow Arrows			$30,000
	Annual Maintenance	$800	$1,200	$4,000
Total		$9,700	$2,200	$34,000
529 - 5th Ave S & S 29th St	Remove Unneeded Lane Configuration Signs and Brackets	$100		
	Replace Optically Limiting Signal Heads	$2,500		
	Remove Right Turn Arrows		$600	
	Touch-up Paint on Poles		$1,000	
	Replace/Upgrade Controller and/or Cabinet			$20,000
	Implement Flashing Yellow Arrows			$30,000
	Annual Maintenance	$800	$1,200	$4,000
Total		$3,400	$2,800	$54,000
530 - 5th Ave S & S 30th St	Implement Flashing Yellow Arrows			$25,000
	Annual Maintenance	$800	$1,200	$4,000
Total		$800	$1,200	$29,000
531 - 5th Ave S & S 31st St	Straighten/Replace Left Turn Yield on Green sign (unless Implementing FYA)	$100		
	Replace damaged Pushbutton & sign	$300		
	Install Pushbutton Poles so closer to Sidewalk Ramps	$6,000		
	Repair/Replace Damaged Signal Pole	$10,000		
	Replace/Upgrade Controller and Cabinet			$20,000
	Implement Flashing Yellow Arrows			$30,000
	Annual Maintenance	$800	$1,200	$4,000
Total		$17,200	$1,200	$54,000

Fort Dodge Traffic Signal Inventory
Cost Estimate Summary - Signal Improvements

Intersection	Item	Period for Modification		
		Short-Term (0-2 Years)	Mid-Term (2-5 Years)	Long-Term (5-15 Years)
532 - 5th Ave S & S 32nd St	Install Pedestrian Signal Heads & Pushbuttons	$12,000		
	Install Battery Back-up System		$8,000	
	Relocate Signal Poles for Clear Zone		$20,000	
	Reconstruct Signal		$200,000	
	Replace/Upgrade Controller and Cabinet *			$20,000
	Implement Flashing Yellow Arrows *			$30,000
	Annual Maintenance	$800	$1,200	$4,000
Total		$12,800	$229,200	$54,000
533 - 5th Ave S & Menards Drwy	New in 2014			
	Annual Maintenance	$800	$1,200	$4,000
Total		$800	$1,200	$4,000
535 - 5th Ave S & S 42nd St/Cty Rd P59	Remove Yield Sign, Install additional Signal Head	$1,000		
	Replace Video Detection System	$35,000		
	Relocate Signal Poles for Clear Zone		$20,000	
	Replace signal poles to realign signal heads for new Lane Configuration		$40,000	
	Replace/Upgrade Controller and/or Cabinet			$20,000
	Implement Flashing Yellow Arrows			$30,000
	Annual Maintenance	$800	$1,200	$4,000
Total		$36,800	$61,200	$54,000

Zone 5 Total	$103,550	$438,800	$548,000

* - Not needed if signal is replaced

Fort Dodge Traffic Signal Inventory
Cost Estimate Summary - Signal Improvements

Intersection	Item	Period for Modification		
		Short-Term (0-2 Years)	Mid-Term (2-5 Years)	Long-Term (5-15 Years)
901 - Hawkeye Ave & 2nd St NW	Relocate Stop Signs to 4' above trail pavement	$100		
	Adjust Flashing period to be per Ped Clearance Requirements (MUTCD)	$100		
	Replace Stop Signs with 18" x 18" signs (MUTCD)	$400		
	Convert to Rapid Rectangular Flashing Beacon		$15,000	
	Annual Maintenance	$400	$600	$2,000
Total		$1,000	$15,600	$2,000
902 - N 32nd St Crossing - 11th Ave N	Replace Pushbutton Signs with standard size	$100		
	Adjust Flashing period to be per Ped Clearance Requirements (MUTCD)	$100		
	Replace Pushbutton with vandal resistant Pushbutton (traffic signal)	$500		
	Annual Maintenance	$400	$600	$2,000
Total		$1,100	$600	$2,000
903 - S 22nd St Mid-Block Signal	Remove Traffic Signal	$5,000		
Total		$5,000	$0	$0

Zone 9 Total	$7,100	$0	$0

CLICK TO RETURN TO INDEX PAGE

ENGINEERS & PLANNERS
SNYDER & ASSOCIATES, INC.
IOWA | MISSOURI | NEBRASKA | SOUTH DAKOTA | WISCONSIN

Memorandum

To: Chad Schaeffer, P.E., City of Fort Dodge
Tony Trotter, P.E., City of Fort Dodge

Date: January 9, 2015

From: Todd Knox, P.E., PTOE

CC: Mark Perington, P.E., PTOE
Wade Greiman, P.E.

RE: First Avenue South and South 15th Street Intersection
2014 Traffic Systems Improvement Study
S&A Project Number: 114.0451.01

The following are the initial findings and recommendations for the 1st Ave S and S 15th St.

Existing Conditions/Operations

First Ave S is a minor arterial connecting downtown Fort Dodge to the commercial region near S 25th St with a railroad overpass. It is a two lane street with parking on both sides except near the S 15th St intersection. The posted speed limit is 25 mph. S 15th St is a minor arterial connecting Fort Dodge to rural Webster County, including Harlan Rogers Sports Complex and the Fort Dodge Regional Airport. It is a four-lane street with no parking and a posted speed limit of 30 mph.

Per recommendations of an Iowa DOT TEAP study in the mid 1990's, the intersection traffic signal was converted to split phasing north/south and remained permissive only left turn phasing east west. The change was implemented due to crash patterns at the time. Parking was removed along 1st Ave S at the intersection to provide width within the existing road cross section to create left turn lanes; However due to differing sides of the street for parking to the east and west, these left turn lanes are negatively offset. S 15th St maintains two approaching lanes utilizing shared turn lanes with through lanes.

Traffic volumes through the intersection are consistent throughout the day. The AM period has typically lesser volumes than midday or PM periods. Midday and PM periods have similar traffic patterns with the north and east approaches carrying approximately the same approaching volume (440 vph) and the south and west approaches carrying similar volumes (300 vph). Most turning volumes at the intersection are less than 80 vph except for the southbound left turn movement which has over 120 vph throughout most of the day.

Each traffic signal pole is located at the back of curb. As such, the poles have been hit by vehicles over the years and show signs of dents and scratches. Pedestrian pushbuttons are located on these signal poles. These pushbuttons and signs show weathering and damage as well. The three-section signal heads on the mast-arms do not have backplates and the pedestrian signal head are 9" height with no countdown indication. The controller is a NEMA controller; it is a generation or two older, however, it is still functional as is the remaining cabinet equipment.

The following is a list of potential signal improvements:

1. Update signal timings to current standard of practice (attached)
2. Replace two damaged signal poles
3. Replace pedestrian pushbuttons and signs
4. Install countdown pedestrian signal heads
5. Install emergency vehicle pre-emption (Fire Department located north of intersection)
6. Trim trees in southeast corner to improve visibility of pedestrian heads

Safety Review

From 2004 through 2013, the intersection experienced 56 vehicular crashes. This results in a 0.94 crashes per million entering vehicles (MEV) crash rate, which is at the statewide average for intersection crash rate (0.8 to 1.0 crashes per MEV). Prior to 2009, the intersection experienced at least 6 crashes per year. Since 2009, there have been 5 crashes or less each year with the exception of 2011 when 7 crashes occurred; the crash rate for the most recent 5 years is 0.78 crashes per MEV. There were four minor injuries and 12 possible injuries involved with these crashes.

Almost half of the crashes (24) were rear-end crashes with half occurring westbound. Right angle crashes account for 25% of the remaining crashes and crashes with left turning traffic accounts for an additional 20%. The left turning crashes are crashes with east/west traffic. Approximately 30% of the crashes indicated that the road surface was either wet, ice covered, or snow covered.

Split phasing the north/south traffic reduced the number of crashes at the intersection. During the 10 year period, there was not a reported crash between northbound and southbound vehicles.

The way the east/west lanes are aligned through the intersection, through traffic must shift into the parking lane at the intersection to continue through the intersection and shift back within 200 ft of the intersection (100 ft for westbound traffic). Left turning traffic continues straight to the intersection. This shifting can cause driver confusion.

Pedestrian ramps have been constructed for each corner of the intersection. Only three of the corners have detectable warning panels with the southeast corner panels being located improperly. The northwest corner does not have detectable warning panels and has cracking in the sidewalk ramp near the curb.

The following is a list of intersection safety improvements:

7. Revise pavement markings to align east/west left turn lanes
8. Reconstruct pedestrian ramp in southeast corner for proper location of detectable warning panels
9. Reconstruct pedestrian ramp in northwest corner
10. Convert S 15th St to a three-lane corridor: two through lanes with center two-way left turn lane
11. Remove traffic signal split phasing for north/south, and introduce protected/permissive left turn phasing

Estimated Construction Costs

1.	Signal Timing adjustments	< 1 hr of time
2.	Replace Poles	$20,000 ($10,000 ea)
3.	Replace Pushbuttons and Signs	$2,400 ($300 ea)
4.	Install Countdown Timers	$6,000 ($750 ea, assumes reuse bracket)
5.	Emergency Vehicle Pre-Emption	$5,000-$10,000+ (for both Central & 1st Ave S)
6.	Trim Trees	$500
7.	1st Ave S Realignment	$10,000 (no signal modifications)
8.	SE Corner Ped Ramp	$2,500
9.	NW Corner Ped Ramp	$2,500

Implementation of Improvements

The recommended improvements are not intended to be constructed at the same time or potentially within 5 years; timeframe depends on available funding. Updating the signal timings should occur prior to 2015 construction season. Trimming the trees should occur as weather allows and be continued annually as needed. Installing countdown pedestrian signal heads should occur either when the existing signal heads burn-out/fail or funds become available. It would be advisable to consider replacing the pushbuttons and signs at the same time as the pedestrian signal heads. Reconstruction of the pedestrian ramps should occur as funds become available within the next few years. Installing emergency vehicle pre-emption could occur when funds become available.

Replacing the damaged signal poles should be coordinated with realigning the lanes along 1st Ave S and converting S 15th St to three lanes. It is possible to realign 1st Ave S and convert S 15th St to three lanes without replacing signal poles, but this would require signal heads not to be aligned over the center of approach lanes; signal heads would be located over lane lines.

Realigning 1st Ave S

As indicated, realigning the left turn lanes along 1st Ave S could be completed with no modifications to the current traffic signal. This will improve visibility for vehicles turning left. Consideration should be made to potentially maintain the three-lane cross-section west to the termination of the three lanes being constructed as a part of the Cross-Town Connector - Phase 1 project, west of S 13th St.

Converting 15th St to Three Lanes

Converting to three lanes should be implemented beyond this single intersection. Conversion should be considered from 4th Ave S to 20th Ave N. This corridor is over 1.5 miles in length. The safety review of this and the other traffic signals along 15th St determined a conversion of the entire length to three lanes is a potential safety improvement as each traffic signal intersection was at or exceeding the statewide average for intersection crash rate.

With the current traffic signals, it would not be possible to keep a signal head over each lane after conversion due to MUTCD requirements, thus longer mast arms would be necessary if left turn phasing is desired. Existing poles could accommodate similar permissive only phasing for left turns. Traffic signal controllers and cabinets would need to updated/replaced to implement flashing yellow arrow at these locations.

As such, converting 15th St to three lanes from 4th Ave S to 20th Ave N could cost from $200,000 for just markings, signing, and minor signal adjustments to over $1,000,000 to include pavement rehabilitation and five signal reconstructions. The Traffic Safety Improvement Program (TSIP) funding would be a potential source for funding for either signal equipment or converting to three lanes (up to $500,000 per project).

Upcoming Construction Activities

In 2015, 1st Ave S will experience closures for construction both east and west of the S 15th St intersection. S 15th St will be utilized as a detour route for these and potentially other construction projects in Fort Dodge. Based on estimated traffic rerouting and existing turning movements, it is recommended to maintain the split phase signal operation north/south this year. Due to the closures on each side of S 15th St, the primary travel pattern will be straight north/south or turning onto S 15th St from 1st Ave S. Having two through lanes will help with intersection operation. Removing the split

phase at this time will create a greater potential for vehicular crashes. Traffic signal timings adjustments will be created for the construction detours prior to the start of construction.

Snyder & Associates, Inc.

PROJECT: 1th Ave S & S 15th St *NO.:*
DATE: 01/09/15
SUBJECT: Initial Timings *GK* *CK:* _____

Basic Timing Data

	Ph1 -	Ph2 - EB	Ph3 -	Ph4 - NB	Ph5 -	Ph6 - WB	Ph7 -	Ph8 - SB
Min Grn		15		10		15		10
Passage		3.0		3.0		3.0		3.0
Max 1		40		30		40		30
Yellow		3.4		3.8		3.4		3.8
Red Clr		1.8		1.6		1.8		1.6
Walk		7		7		7		7
Ped Clear		15		16		15		16
Ph Min Veh		*21*		*16*		*21*		*16*
Ph Min Ped		*28*		*29*		*28*		*29*

Coordination Plan Data

Dial 1/Split 1		Cycle:			Offset:			
Phase	1	2	3	4	5	6	7	8
Time								
Mode		Coord				Coord		
Ring Sum Check				0				0

Dial 2/Split 1		Cycle:			Offset:			
Phase	1	2	3	4	5	6	7	8
Time								
Mode								
Ring Sum Check				0				0

Dial 3/Split 1		Cycle:			Offset:			
Phase	1	2	3	4	5	6	7	8
Time								
Mode								
Ring Sum Check				0				0

Add'l Settings

Review Video Detection to verify working properly and zones are in appropriate locations. Make any necessary adjustments

CLICK TO RETURN TO INDEX PAGE

ENGINEERS & PLANNERS
SNYDER & ASSOCIATES, INC.
IOWA | MISSOURI | NEBRASKA | SOUTH DAKOTA | WISCONSIN

Memorandum

To: Chad Schaeffer, P.E., City of Fort Dodge
Tony Trotter, P.E., City of Fort Dodge

Date: January 12, 2015

From: Todd Knox, P.E., PTOE

CC: Mark Perington, P.E., PTOE
Wade Greiman, P.E.

RE: Fifth Ave South Corridor
2014 Traffic Systems Improvement Study
S&A Project Number: 114.0451.01

The following are the initial findings and recommendations for the 5th Ave S corridor from S 8th St to S 42nd St (Cty Rd P59).

Existing Conditions/Operations

Fifth Ave S is a principal arterial and is the only east/west street that extends completely from the west side of the city to the east side. It connects to US Hwy 169 on the west (as Kenyon Rd) and to Cty Rd P59 on the east, both of which connect to US Hwy 20. Fifth Ave S is a four lane street with a mix of left turn lanes with medians between S 8th St east to S 20th St, then a mix of left turn lanes with medians or center two way left turn lane east to S 32nd St. East of S 32nd St, 5th Ave S transitions to a three-lane roadway east to Cty Rd P59. The posted speed limit is 35 mph from S 8th St east to Midway Blvd. East of Midway Blvd, the posted speed limit changes to 45 mph.

There are currently 12 intersections from S 8th St to S 42nd St that are signalized along 5th Ave S. Phasing across these intersections vary from no left turn phasing (at S 17th St) to left turn phasing included on each approach (S 21st St, S 25th St, and S 32nd St) to left turn phasing on 5th Ave S and split phasing on the side street (S 29th St) with variations of these in-between. Most of the traffic signal controllers are manufactured by Siemens (Eagle), however, two intersections operate using other controllers (Econolite controller at S 25th St and a Traffic Control Technologies controller at S 29th St). Specific traffic signal system communication is difficult across intersections that have controllers by different manufacturers. However, to achieve coordination amongst these controllers, timings can be implemented based on time-of-day and day-of-week. The internal local controller clocks would maintain coordination. Due to the age of some of the controllers, the internal clocks would need to be checked and reset to maintain coordination.

Controllers west of and including S 17th St indicated having coordination timings every day, all day. These operated on a 68 sec cycle. Phasing for these intersections are less complicated (having at most six phases: E/W lefts, E/W thrus, and N/S movements). Phasing like these could support a shorter coordination cycle length, such as the 68 sec cycle.

The east/west left turn signal heads at both S 25th St and S 29th St have optically limiting lenses, and per the current "aiming" of these heads/faces, the viewing distance is very limited. All other left turn signal heads do not have the optically limiting lenses and the indications are clearly visible.

The following are a list of improvements that could be implemented within the year that could help overall operations:

1. Update basic controller timings to current standard of practice (attached)
2. Implement attached coordination timings and verify each local intersection controller clock reliability
3. Replace pedestrian pushbuttons and signs as needed
4. Install video detection at remaining intersections (S 12th St, S 15th St, and S 17th St)
5. Adjust optically limiting lenses to better align with left turn lanes or replace those signal heads

Once coordination timings are implemented, they will need to be reviewed and adjusted to fine tune the plans. Most times adjusting the offsets will help to better adapt the plans to meet traffic flow conditions in the field.

There are additional improvements across all intersections, however, these other improvements are not needed soon and can be more costly to implement (including implementing flashing yellow arrows, replacing controllers/cabinets, and adjusting signal pole footings). The final report will document these improvements.

Safety Review

Most of the signalized intersections along 5th Ave S experienced crash rates at or above the statewide average during the 10-year analysis period (2004-2013). Only the intersections of S 12th St, S 30th St, and S 42nd St were below the 0.8 to 1.0 crashes per million entering vehicles (MEV) statewide average for intersection crash rate and S 12th St and S 42nd St intersections had crash rates of 0.7 crashes per MEV. It should be noted that many of the higher crash rate intersection have had improvements implemented at the intersections within the last 4-5 years and have experienced lower crash rate trends versus the statewide average in recent years.

There have been injury crashes at every signalized intersection. For the most part, the severity has been minor or possible injuries. The exceptions to this are two fatal crashes along the corridor in the last 10 years. One occurred east of the S 15th St intersection in 2008 (actually heading eastbound so not related

to the intersection) and one at S 30th St in 2011 where an elderly driver (81) struck a construction/maintenance vehicle. There have been two major injury crashes (two injuries) at the S 25th St intersection (2007 and 2009) and one at S 31st St (2006).

Most intersections experienced a high number of rear-end crashes during the analysis which is typical for signalized intersections. Two intersections had a high number of fixed objects struck (S 8th St [median, pole, and sign post] and S 32nd St [median]). Three intersections had a high number of right angle and oncoming left turn crashes (S 15th St, S 17th St [right angle only], and S 29th St).

Implementing coordination timings across all traffic signals should reduce the potential of rear-end crashes as start/stop and variation in speed of vehicles is reduced. Recent improvements to the S 8th St intersection have reduced the number of fixed objects struck. Improvements to the median locations at S 32nd St should help turning paths of vehicles to avoid colliding with the median at that location. Timing improvements, including coordination timings, may reduce the potential for right angle and left turn crashes as these intersections had a high number of drivers running the traffic signal.

Midway Signal Warrant Review

A traffic signal warrant analysis was conducted on the 5th Ave S and Midway Blvd intersections following the guidelines identified in the MUTCD. A detailed review of the warrant analysis will be included in the final report. The intersection does meet two signal warrants, however, at this time it is not recommended to install a traffic signal. The warrants that were met are Warrant #3 Peak Hour and Warrant #7 Crash Experience.

Warrant #3 barely met the minimum requirement for traffic on the side street. Two hours exceeded the minimum volume by less than 5%. Warrant #7 met the crash experience of having five or more correctable crashes within a 12 month period in 2009. Since then, the number of crashes has been lower. Also, the warrant requires adequate trial of alternatives be tested (including enforcement) prior to installing a traffic signal.

The intersection should continue to be monitored for any changes in operations and for the effects of the recent three lane conversion on S 5th Ave. Traffic increases due to additional development within the industrial park which would increase traffic or additional truck traffic through the intersection may cause a need to consider installation of a traffic signal. Other intersection improvements should be considered as well, including modifications to the Frontage Rd location (spacing from S 5th Ave) and approach lanes along Midway Blvd. Traffic patterns may change after the completion of the 1st Ave S extension to S 42nd St and thereby reducing the need for a traffic signal.

Upcoming Construction Impacts

In 2015, 5th Ave S will be utilized as detour routes for construction projects, including East Region Phase 2. East Region Phase 2 will limit traffic along 1st Ave S to westbound traffic and S 25th St to northbound traffic for the majority of construction. This will place a higher traffic demand for eastbound traffic along 5th Ave S from S 15th St to S 29th St. Another stage of construction for East Region Phase 2 will close 1st Ave S between S 25th St and S 27th St to all traffic, again placing a higher traffic demand on 5th Ave S at S 25th St and S 29th St intersections. Construction detour coordination timing plans will be provided to account for these changes in traffic patterns. These can be programmed in to local intersection controllers in advance of detour, then implemented and adjusted as traffic patterns change.

Long Term Conceptual Improvements

There are other improvements that are recommended for the 5th Ave S corridor that are more long term modifications. The final report will document potential timing and necessary modifications with cost in more detail. Some of the modifications include:

- Intersection phasing changes (i.e. elimination of split phasing)
- Flashing yellow arrows
- Network communication for traffic signal system
- Geometric Improvements (minor pavement widening for improved lane alignment on side streets)

The S 29th St intersection has split phasing north/south. Split signal phasing creates sluggish signal operation, however provides increased safety for those movements. Split phasing could be removed if the north/south left turn lanes were better aligned and modifications were made to the traffic signal.

Flashing yellow arrows were implemented at the 5th Ave S and Menards traffic signal in 2014. This should be implemented throughout the 5th Ave S corridor and as budgets can be established. Converting to flashing yellow arrow requires newer traffic signal controllers or at least newer software versions within controllers (within the last 5 years). Besides controllers, signal cabinets may need additional load switches and updated malfunction management units (MMUs) to accommodate. Some signal suppliers suggest completely replacing the signal cabinet (up to $20,000 each). Additionally, more signal cable may need to be installed within the conduits to provide flashing yellow arrow capabilities and signal heads would need to be replaced or modified.

There is limited fiber optic cable installed along 5th Ave S. Current communication utilizes serial communication over multi-mode fiber optic cable. Newer controllers and systems are implementing IP addressable networks over single mode fiber optic cable. Fifth Ave S and City communication should progress towards the IP addressable network as this provides more flexibility in direct communication

with each signal cabinet and provides the opportunity to bring video feeds (detection or CCTV cameras) back for use by Engineering, Public Works Maintenance or emergency operations staff. This includes newer signal controllers and Ethernet switches within signal cabinets.

Most of 5th Ave S has been widened to include left turn lanes along the corridor. Only the S 12th St and S 17th St signalized intersections do not have left turn lanes along 5th Ave S (westbound only at S 12th St). Adding these left turn lanes will reduce the potential for crashes involving left turning vehicles at these intersections. These projects can be excellent candidates for Iowa DOT safety funding, but can be difficult to implement with constrained right of way, or project requirements for raised medians /access management. Other intersections along the corridor could benefit from aligning left turn lanes north/south to improve visibility for drivers during the permissive left turn phasing. Other intersections could benefit from increased corner radii to reduce off-tracking by semi traffic as well.

Signal Timing Information Sheet
Time-of-Day Plans
Coordination Timings
City of Fort Dodge, Iowa
January 12, 2015

5th Ave S Coordination Schedule

Plan #	Period	Days	Start	End
0/0/4		M-F	0:00	6:30
1/1/1	Day	M-F	6:30	20:30
0/0/4		M-F	20:30	0:00
0/0/4		Sat/Sun	0:00	10:00
1/1/1	Midday	Sat/Sun	10:00	18:00
0/0/4		Sat/Sun	18:00	0:00

Coordination Settings

		Setting	Code	
Operation Mode	OPER	1	AUT	Automatic
Coordination Mode	MODE	2/3	PYL/FAC	
Maximum Mode	MAX	0	INH	Inhibit
Correction Mode	CORR	3	SW+	Short Way Plus
Offset Mode	OFST	0	BEG OF GREEN	
Force Mode	FRCE	0	PLN	Plan Timing
Max Dewell		0	sec	
Yield Period		0	sec	

Snyder & Associates, Inc.

PROJECT: 5th Ave S/Kenyon Rd & S 8th St *NO.:*
DATE: 04/29/15
SUBJECT: Initial Timings *GK* *CK:* _____

Basic Timing Data

	Ph1 -	Ph2 - EB	Ph3 -	Ph4 - SB	Ph5 - EB L	Ph6 - WB	Overlap A	Overlap B
Min Grn		15		10	7	15	15	15
Passage		3.0		3.0	3.0	3.0		
Max 1		40		30	15	40		
Yellow		4.1		3.0	3.2	4.1	4.0	4.0
Red Clr		2.0		4.0	2.3	2.0	2.0	2.0
Walk				7		7		
Ped Clear				20		16		
Ph Min Veh		*22*		*18*	*14*	*22*		
Ph Min Ped		*7*		*35*		*30*		

Coordination Plan Data

Dial 1/Split 1 Cycle: 80 Offset: 49

Phase	1	2	3	4	5	6	7	8
Time		58		22	18	40		22
Mode		Coord				Coord		
Ring Sum Check				80				80

Free Mode

Dial 2/Split 1 Cycle: Offset:

Phase	1	2	3	4	5	6	7	8
Time								
Mode								
Ring Sum Check				0				0

Dial 3/Split 1 Cycle: Offset:

Phase	1	2	3	4	5	6	7	8
Time								
Mode								
Ring Sum Check				0				0

Add'l Settings

Left in Free Mode possibly due to Advance Warning Flashers

Snyder & Associates, Inc.

PROJECT: 5th Ave S & S 12th St *NO.:*
DATE: 07/15/15
SUBJECT: Initial Timings *GK* *CK:* _____

Basic Timing Data

	Ph1 -	Ph2 - EB	Ph3 -	Ph4 - NB&SB	Ph5 - EB L	Ph6 - WB	Ph7 -	Ph8 -
Min Grn		15		10	7	15		
Passage		3.0		3.0	3.0	3.0		
Max 1		40		30	15	40		
Yellow		4.1		3.8	3.2	4.1		
Red Clr		1.4		1.8	1.7	1.4		
Walk		7		7		7		
Ped Clear		20		25		20		
Ph Min Veh		*22*		*17*	*13*	*22*		
Ph Min Ped		*34*		*39*		*34*		

Coordination Plan Data

Dial 1/Split 1 Cycle: 80 Offset: 14

Phase	1	2	3	4	5	6	7	8
Time		51		29	13	38		29
Mode		Coord				Coord		
Ring Sum Check				80				80

Dial 2/Split 1 Cycle: Offset:

Phase	1	2	3	4	5	6	7	8
Time								
Mode								
Ring Sum Check				0				0

Dial 3/Split 1 Cycle: Offset:

Phase	1	2	3	4	5	6	7	8
Time								
Mode								
Ring Sum Check				0				0

Add'l Settings

Changed Detector settings to Non-Locking
Phase 6 is in Max Recall
Phase 4 is both NB & SB directions

Snyder & Associates, Inc.

PROJECT: 5th Ave S & S 15th St *NO.:*
DATE: 04/29/15
SUBJECT: Initial Timings *GK* *CK:* _____

Basic Timing Data

	Ph1 - WB L	Ph2 - EB	Ph3 -	Ph4 - SB	Ph5 - EB L	Ph6 - WB	Ph7 -	Ph8 - NB
Min Grn	7	15		10	7	15		10
Passage	3.0	3.0		3.0	3.0	3.0		3.0
Max 1	15	40		30	15	40		30
Yellow	3.2	4.1		3.8	3.2	4.1		3.8
Red Clr	2.3	1.7		1.9	2.3	1.7		1.9
Walk		7		7		7		7
Ped Clear		25		25		25		25
Ph Min Veh	*14*	*22*		*17*	*14*	*22*		*17*
Ph Min Ped		*39*		*39*		*39*		*39*

Coordination Plan Data

Dial 1/Split 1 Cycle: 80 Offset: 0

Phase	1	2	3	4	5	6	7	8
Time	14	39		27	14	39		27
Mode		Coord				Coord		
Ring Sum Check				80				80

Dial 2/Split 1 Cycle: Offset:

Phase	1	2	3	4	5	6	7	8
Time								
Mode								
Ring Sum Check				0				0

Dial 3/Split 1 Cycle: Offset:

Phase	1	2	3	4	5	6	7	8
Time								
Mode								
Ring Sum Check				0				0

Add'l Settings

Snyder & Associates, Inc.

PROJECT: 5th Ave S & S 17th St *NO.:*
DATE: 04/29/15
SUBJECT: Initial Timings *GK* *CK:* _____

Basic Timing Data

	Ph1 -	Ph2 - EB	Ph3 -	Ph4 - SB	Ph5 -	Ph6 - WB	Ph7 -	Ph8 - NB
Min Grn		15		10		15		10
Passage		3.0		3.0		3.0		3.0
Max 1		40		30		40		30
Yellow		4.1		3.8		4.1		3.8
Red Clr		1.4		1.6		1.4		1.6
Walk		7		7		7		7
Ped Clear		16		18		16		18
Ph Min Veh		*22*		*16*		*22*		*16*
Ph Min Ped		*30*		*31*		*30*		*31*

Coordination Plan Data

Dial 1/Split 1 Cycle: 80 Offset: 26

Phase	1	2	3	4	5	6	7	8
Time		48		32		48		32
Mode		Coord				Coord		
Ring Sum Check				80				80

Dial 2/Split 1 Cycle: Offset:

Phase	1	2	3	4	5	6	7	8
Time								
Mode								
Ring Sum Check				0				0

Dial 3/Split 1 Cycle: Offset:

Phase	1	2	3	4	5	6	7	8
Time								
Mode								
Ring Sum Check				0				0

Add'l Settings

Increased time allotment for S 17th St due to stuck ped pushbutton

Snyder & Associates, Inc.

PROJECT: 5th Ave S & S 21st St *NO.:*
DATE: 04/22/15
SUBJECT: Initial Timings *GK* *CK:* _____

Basic Timing Data

	Ph1 - EB L	Ph2 - WB	Ph3 - SB L	Ph4 - NB	Ph5 - WB L	Ph6 - EB	Ph7 - NB L	Ph8 - SB
Min Grn	7	15	7	10	7	15	7	10
Passage	3.0	3.0	3.0	3.0	3.0	3.0	3.0	3.0
Max 1	15	40	15	30	15	40	15	30
Yellow	3.2	4.1	3.0	3.8	3.2	4.1	3.0	3.8
Red Clr	2.0	1.7	3.6	2.5	2.0	1.7	3.6	2.5
Walk		7		7		7		7
Ped Clear		16		28		16		28
Ph Min Veh	*13*	*22*	*15*	*17*	*13*	*22*	*15*	*17*
Ph Min Ped		*30*		*42*		*30*		*42*

Coordination Plan Data

Dial 1/Split 1 Cycle: 80 Offset: 16

Phase	1	2	3	4	5	6	7	8
Time	13	31	15	21	13	31	15	21
Mode		Coord				Coord		
Ring Sum Check				80				80

Dial 2/Split 1 Cycle: Offset:

Phase	1	2	3	4	5	6	7	8
Time								
Mode								
Ring Sum Check				0				0

Dial 3/Split 1 Cycle: Offset:

Phase	1	2	3	4	5	6	7	8
Time								
Mode								
Ring Sum Check				0				0

Add'l Settings

Changed Preempt #2 for Yellow Clearance and All Red to match above
Changed recalls to min recall for Ph 2 & 6 only

Snyder & Associates, Inc.

PROJECT: 5th Ave S & S 25th St *NO.:*
DATE: 04/22/15
SUBJECT: Initial Timings *GK* *CK:* _____

Basic Timing Data

	Ph1 - WB L	Ph2 - EB	Ph3 - NB L	Ph4 - SB	Ph5 - EB L	Ph6 - WB	Ph7 - SB L	Ph8 - NB
Min Grn	7	15	7	10	7	15	7	10
Passage	3.0	3.0	3.0	3.0	3.0	3.0	3.0	3.0
Max 1	15	40	15	30	15	40	15	30
Yellow	3.2	4.1	3.0	3.8	3.2	4.1	3.0	3.8
Red Clr	2.2	1.7	3.1	2.2	2.2	1.7	3.1	2.2
Walk		7		7		7		7
Ped Clear		16		23		16		23
Ph Min Veh	*13*	*22*	*14*	*17*	*13*	*22*	*14*	*17*
Ph Min Ped		*30*		*37*		*30*		*37*

Coordination Plan Data

Dial 1/Split 1 Cycle: 80 Offset: 66

Phase	1	2	3	4	5	6	7	8
Time	13	31	14	22	18	26	14	22
Mode		Coord				Coord		
Ring Sum Check				80				80

Dial 2/Split 1 Cycle: Offset:

Phase	1	2	3	4	5	6	7	8
Time								
Mode								
Ring Sum Check				0				0

Dial 3/Split 1 Cycle: Offset:

Phase	1	2	3	4	5	6	7	8
Time								
Mode								
Ring Sum Check				0				0

Add'l Settings

Snyder & Associates, Inc.

PROJECT: 5th Ave S & S 29th St *NO.:*
DATE: 04/22/15
SUBJECT: Initial Timings *GK* *CK:* _____

Basic Timing Data

	Ph1 - WB L	Ph2 - EB	Ph3 - NB	Ph4 - SB	Ph5 - EB L	Ph6 - WB	Ph7 -	Ph8 -
Min Grn	7	15	10	10	7	15		
Passage	3.0	3.0	3.0	3.0	3.0	3.0		
Max 1	15	40	30	30	15	40		
Yellow	3.2	4.1	3.8	3.8	3.2	4.1		
Red Clr	2.3	1.7	2.2	2.4	2.3	1.7		
Walk		7	7	7		7		
Ped Clear		15	22	23		15		
Ph Min Veh	*14*	*22*	*17*	*17*	*14*	*22*		
Ph Min Ped		*29*	*36*	*37*		*29*		

Coordination Plan Data

Dial 1/Split 1 Cycle: 80 Offset: 18

Phase	1	2	3	4	5	6	7	8
Time	14	28	17	21	19	23		
%ages	18%	35%	22%	25%	24%	29%		
Mode		Coord				Coord		
Ring Sum Check				80				80

Dial 2/Split 1 Cycle: Offset:

Phase	1	2	3	4	5	6	7	8
Time								
Mode								
Ring Sum Check				0				0

Dial 3/Split 1 Cycle: Offset:

Phase	1	2	3	4	5	6	7	8
Time								
Mode								
Ring Sum Check				0				0

Add'l Settings

Snyder & Associates, Inc.

PROJECT: 5th Ave S & S 30th St *NO.:*
DATE: 04/22/15
SUBJECT: Initial Timings *GK* *CK:* _____

Basic Timing Data

	Ph1 - WB L	Ph2 - EB	Ph3 -	Ph4 - NB	Ph5 -	Ph6 - WB	Ph7 -	Ph8 -
Min Grn	7	15		10		15		
Passage	3.0	3.0		3.0		3.0		
Max 1	15	40		30		40		
Yellow	3.2	4.1		3.0		4.1		
Red Clr	2.3	1.7		3.3		1.7		
Walk		7		7		7		7
Ped Clear		12		19		12		19
Ph Min Veh	*14*	*22*				*22*		
Ph Min Ped		*26*		*33*		*26*		*27*

Coordination Plan Data

Dial 1/Split 1 Cycle: 80 Offset: 44

Phase	1	2	3	4	5	6	7	8
Time	18	39		23		57		
Mode		Coord				Coord		
Ring Sum Check				80				80

Dial 2/Split 1 Cycle: Offset:

Phase	1	2	3	4	5	6	7	8
Time								
Mode								
Ring Sum Check				0				0

Dial 3/Split 1 Cycle: Offset:

Phase	1	2	3	4	5	6	7	8
Time								
Mode								
Ring Sum Check				0				0

Add'l Settings

Snyder & Associates, Inc.

PROJECT: 5th Ave S & S 31st St *NO.:*
DATE: 04/22/15
SUBJECT: Initial Timings *GK* *CK:* _____

Basic Timing Data

	Ph1 - WB L	Ph2 - EB	Ph3 - SB L	Ph4 - NB	Ph5 - EB L	Ph6 - WB	Ph7 -	Ph8 - SB
Min Grn	7	15	7	10	7	15		10
Passage	3.0	3.0	3.0	3.0	3.0	3.0		3.0
Max 1	15	40	15	30	15	40		30
Yellow	3.2	4.1	3.0	3.8	3.2	4.1		3.8
Red Clr	2.3	1.8	3.1	2.2	2.3	1.8		2.2
Walk		7		7		7		7
Ped Clear		13		22		13		22
Ph Min Veh	*14*	*22*	*14*	*17*	*14*	*22*		*17*
Ph Min Ped		*27*		*36*		*27*		*36*

Coordination Plan Data

Dial 1/Split 1 Cycle: 80 Offset: 62

Phase	1	2	3	4	5	6	7	8
Time	14	35	14	17	14	35		31
Mode		Coord				Coord		
Ring Sum Check				80				80

Dial 2/Split 1 Cycle: Offset:

Phase	1	2	3	4	5	6	7	8
Time								
Mode								
Ring Sum Check				0				0

Dial 3/Split 1 Cycle: Offset:

Phase	1	2	3	4	5	6	7	8
Time								
Mode								
Ring Sum Check				0				0

Add'l Settings

Snyder & Associates, Inc.

PROJECT: 5th Ave S & S 32nd St *NO.:*
DATE: 07/15/15
SUBJECT: Initial Timings *GK* *CK:* _____

Basic Timing Data

	Ph1 - EB L	Ph2 - WB	Ph3 - SB L	Ph4 - NB	Ph5 - WB L	Ph6 - EB	Ph7 - NB L	Ph8 - SB
Min Grn	7	15	7	10	7	15	7	10
Passage	3.0	3.0	3.0	3.0	3.0	3.0	3.0	3.0
Max 1	15	40	25	30	15	40	15	30
Yellow	3.2	4.1	3.2	4.1	3.2	4.1	3.2	4.1
Red Clr	2.9	2.1	2.9	2.1	2.9	2.1	2.9	2.1
Walk								
Ped Clear								
Ph Min Veh	*14*	*22*	*14*	*17*	*14*	*22*	*14*	*17*
Ph Min Ped		*7*		*7*		*7*		*7*

Coordination Plan Data

Dial 1/Split 1 Cycle: 80 Offset: 56

Phase	1	2	3	4	5	6	7	8
Time	14	28	21	17	14	28	14	24
Mode		Coord				Coord		
Ring Sum Check				80				80

Dial 2/Split 1 Cycle: Offset:

Phase	1	2	3	4	5	6	7	8
Time								
Mode								
Ring Sum Check				0				0

Dial 3/Split 1 Cycle: Offset:

Phase	1	2	3	4	5	6	7	8
Time								
Mode								
Ring Sum Check				0				0

Add'l Settings

Added 3 sec of delay to Ph 7 detector

Snyder & Associates, Inc.

PROJECT: 5th Ave S & Menards *NO.:*
DATE: 04/22/15
SUBJECT: Initial Timings *GK* *CK:* _____

Basic Timing Data

	Ph1 - WB L	Ph2 - EB	Ph3 -	Ph4 -	Ph5 -	Ph6 - WB	Ph7 -	Ph8 - NB
Min Grn	5	15				15		10
Passage	3.0	3.0				3.0		3.0
Max 1	10	40				40		30
Yellow	3.2	4.1				4.1		3.0
Red Clr	2.1	2.0				2.0		2.5
Walk								
Ped Clear								
Ph Min Veh	*11*	*22*				*22*		*17*
Ph Min Ped		*7*				*7*		

Coordination Plan Data

Dial 1/Split 1 Cycle: 80 Offset: 19

Phase	1	2	3	4	5	6	7	8
Time	13	49				62		18
Mode		Coord				Coord		
Ring Sum Check				80				80

Dial 2/Split 1 Cycle: Offset:

Phase	1	2	3	4	5	6	7	8
Time								
Mode								
Ring Sum Check				0				0

Dial 3/Split 1 Cycle: Offset:

Phase	1	2	3	4	5	6	7	8
Time								
Mode								
Ring Sum Check				0				0

Add'l Settings

Added 5 sec delay to Ph 8 detectors in controller
Changed Ph 8 detection to Non-Locking

Snyder & Associates, Inc.

PROJECT: 5th Ave S & S 42nd St/Cty Rd P59 *NO.:*
DATE: 04/22/15
SUBJECT: Initial Timings *GK* *CK:* _____

Basic Timing Data

	Ph1 -	Ph2 - WB	Ph3 -	Ph4 - NB	Ph5 - WB L	Ph6 - EB	Ph7 -	Ph8 - SB
Min Grn		15		10	7	15		10
Passage		3.0		3.0	3.0	3.0		3.0
Max 1		35		35	10	35		20
Yellow		4.9		4.9	4.0	4.9		4.9
Red Clr		1.5		1.5	1.9	1.5		1.5
Walk								
Ped Clear								
Ph Min Veh		*22*		*17*	*14*	*22*		
Ph Min Ped		*7*		*7*		*7*		

Coordination Plan Data

Dial 1/Split 1 Cycle: Offset:

Phase	1	2	3	4	5	6	7	8
Time								
Mode								
Ring Sum Check				0				0

Dial 2/Split 1 Cycle: Offset:

Phase	1	2	3	4	5	6	7	8
Time								
Mode								
Ring Sum Check				0				0

Dial 3/Split 1 Cycle: Offset:

Phase	1	2	3	4	5	6	7	8
Time								
Mode								
Ring Sum Check				0				0

Add'l Settings

Actuated

CLICK TO RETURN TO INDEX PAGE

ENGINEERS & PLANNERS
SNYDER & ASSOCIATES, INC.
IOWA | MISSOURI | NEBRASKA | SOUTH DAKOTA | WISCONSIN

Memorandum

To: Chad Schaeffer, P.E., City of Fort Dodge
Tony Trotter, P.E., City of Fort Dodge

Date: March 13, 2015

From: Todd Knox, P.E., PTOE

CC: Mark Perington, P.E., PTOE
Wade Greiman, P.E.

RE: Fifth Ave S & Midway Blvd Traffic Signal Warrant Study
2014 Traffic Systems Improvement Study
S&A Project Number: 114.0451.01

Location: 5th Ave S & Midway Blvd, Fort Dodge, Iowa

Request/Concern: Given the recent and proposed developments near the intersection and existing traffic conditions during various time periods of typical day, the intersection was reviewed for additional traffic control through signalization. The following analysis reviews the current conditions, and the issues pertaining to potential traffic signalization.

Existing Conditions:

Geometry: The intersection has three approach legs. The east and west approaches have one through lane with a designated left turn lane on the east approach (5th Ave S was converted to a three-lane roadway with a center two-way left turn lane in 2014). There is no north approach. The south approach has one entering and exiting lane and 30 feet of back of curb to back of curb width. No sidewalk/trail is provided for at the intersection.

There is a frontage road located 50 feet south of the intersection connecting to businesses to the east. An additional commercial driveway is located on the west side of Midway Blvd 130 feet south of the intersection. There are commercial driveways located 60 feet east and 150 feet west of the intersection along 5th Ave S.

Speed Limit: 35 mph - 5th Ave S - changes to/from 45 mph 125 feet east of intersection
25 mph - Midway Blvd (not posted)

Traffic Control: STOP control for northbound approach on Midway Blvd, no indication of stop line painted on approach.

Traffic Volumes: The Engineer collected 11 hours of turning movement counts at the intersection on September 4, 2014 (7 AM to 6 PM). Both the peak hour turning movement and estimated approach daily volumes are shown on Figure 1. The peak hours of the count were 7:15 to 8:15 AM (AM Peak), 11:45 AM to 12:45 PM (Midday Peak), and 3:45 to 4:45 PM (PM Peak). Over 80% of all traffic on Midway Blvd came from/went to the

2727 SW Snyder Boulevard | P.O. Box 1159 | Ankeny, IA 50023
p: 515.964.2020 | f: 515.964.7938 | www.snyder-associates.com

west approach on 5th Ave S. Daily volumes were estimated from the 11 hours of counting utilizing the DOT factors reported in their automated traffic recorder reports for municipal streets and September seasonal factors from 2014.

The DOT collected daily traffic counts along 5th Ave S near S 32nd St and S 42nd St in April 2011. These DOT volumes are less than the estimated 2014 daily by over 2,000 vpd each.

Truck traffic through the intersection accounted for less than 10% of total volume for all 11 hours of counting even though most businesses near the intersection are truck oriented. Only the low volume movements (northbound right and westbound left) exceeded 10% trucks (approximately 30% trucks each, however only 150 total vehicles between those movements).

Peak Hour & AADT Volumes:

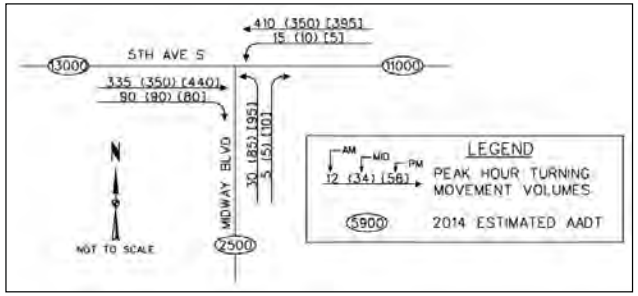

Figure 1: 5th Ave S & Midway Blvd Peak and Daily Traffic Volumes

Collision History: Iowa DOT 2004 - 2013 crash data was reviewed for the study intersection. A summary of the crash data is included in the appendix. The intersection crash rate for the location is 0.61 crashes per million entering vehicles (MEV). The statewide average for similar intersections is between 0.8 and 1.0 crashes/MEV. Table 1 below summarizes the crashes and injuries reported by severity. Only two reportable crashes occurred in 2013 with the majority of crashes being right angle, which are considered correctable by traffic signalization.

Table 1: Crashes (Injuries) by Severity

Year	Fatal	Major Injury	Minor Injury	Possible/ Unknown	PDO	Total
2004	-	-	2 (2)	0 (1)	4	6 (3)
2005	-	-	1 (1)	-	1	2 (1)
2006	-	-	-	-	1	1 (0)
2007	-	-	-	-	3	3 (0)
2008	-	-	-	-	-	0 (0)
2009	-	-	-	1 (1)	5	6 (1)
2010	-	-	-	1 (1)	3	4 (1)
2011	-	-	-	1 (2)	3	4 (2)
2012	-	-	-	-	-	0 (0)
2013	-	-	-	1 (4)	1	2 (4)
Total	0 (0)	0 (0)	3 (3)	4 (9)	21	28 (12)

Traffic Impacts:

There have been recent developments constructed near Midway Blvd south of 5th Ave S. These developments are more truck traffic generation type facilities and likely will increase truck traffic through the 5th Ave S & Midway Blvd intersection.

First Ave S is planned to be extended from east of S 32nd St east and connect to S 42nd St. Once this occurs, traffic volumes along 5th Ave S may initially reduce, creating more gaps along 5th Ave S. However future land use/development along the new 1st Ave S corridor occurs, and there will be an increase in overall traffic generation in the area, thus 5th Ave S volumes may return to today values or possibly increase.

Traffic Signal Warrant Analysis Performed:

Traffic signal warrant analysis was performed for the study intersection with existing traffic volumes. The warrant analysis was conducted according to the *Manual on Uniform Traffic Control Devices* (MUTCD), 2009 Edition, standards. Warrant 4 (Pedestrian Volumes), Warrant 5 (School Crossing), Warrant 6 (Coordinated Signal System), Warrant 8 (Roadway Network), and Warrant 9 (Near Grade Crossing) were not considered applicable to the study. The MUTCD indicates that engineering judgment should be used to determine the influence of right turning traffic from the minor street which could reduce the minor street volume (turning right on red). At this intersection, there are very few vehicles turning right from Midway Blvd, so the right turning volume from Midway Blvd will not be reduced. Table 2 summarizes warrant analysis for the existing traffic conditions and also lists the number of hours that satisfy the warrant conditions. Warrant analysis worksheets are included in the appendix.

Table 2: Existing Traffic Conditions Warrant Analysis (# Hours)

Warrant	Existing Conditions
Warrant 1 - 8 Hour Volumes	
1A - Minimum Volume	No (0)
1B - Interruption of Continuous Traffic	No (4)
Warrant 2 - 4 Hour Volume	No (0)
Warrant 3 - Peak Hour	
3A - Peak Hour Delay	Delay not collected Volume - 2 hrs meet
3B - Peak Hour Volume	No (0)
Warrant 4 - Pedestrian Volumes	Not Evaluated
Warrant 5 - School Crossing	Not Evaluated
Warrant 6 - Coordinated System	Not Evaluated
Warrant 7 - Crash Experience	In 2009, Yes. Since, No
Warrant 8 - Roadway Network	Not Evaluated
Warrant 9 - At-Grade Crossing	Not Evaluated

Recommendation:

The study intersection does meet two warrants partially. Since vehicular delay was not collected, the delay portion of that warrant cannot be analyzed. However, vehicles approaching from Midway Blvd would have had to been delayed for at least 4 vehicle-hours or vehicles in the peak hour would have to be delayed for an average of 2.25 minutes in order to meet the delay requirement. Based on field review this is not apparent.

The other warrant met was Warrant 7 - Crash Experience. The basic requirement for this warrant is that there are five or more reportable crashes correctable by a traffic signal within a 12 month period. Correctable crashes by a traffic signal include right angle crashes. This requirement was achieved in 2009; however, it has not been since. Plus the Warrant requires adequate trial of alternatives with satisfactory observance and enforcement has failed to reduce crash history. The 2014 conversion of 5th Ave S to three lanes and other recent reduction of crashes at the intersection indicate that this intersection should be monitored for crashes. If correctable crashes increase (i.e. right angle), then a traffic signal installation could be warranted.

At this time, a traffic signal is not recommended for installation at 5th Ave S & Midway Blvd. The crash history should be re-evaluated after 12 months (at least) of the three lane configuration. Yes the volumes for the peak hour delay met the requirements; however they are exceeded by only 5% for 1.25 hrs.

If a traffic signal is constructed, geometric improvements are recommended in combination to improve operations of the traffic signal. The south approach should be widened for separate left and right turn lanes. The Frontage Rd should be relocated south away from the intersection to improve vehicular storage at the intersection. This may occur when the site in the southeast corner redevelops.

Consideration should be made to combine driveways on the north side of 5th Ave S to provide a single access as a north approach to the intersection. Combining driveways will impact parking and site storage for these businesses. Other long term land use

redevelopment considerations would include the potential for a new public street as a north approach with potential connection north to the new 1st Ave S corridor. This would be similar to planning considerations for the signalized intersection at the Menards Driveway to the west.

Appendix

- 2014 Turning Movement Counts
- 2004 - 2013 Crash Summary
- Traffic Signal Warrant Worksheets

Snyder & Associates
Engineers and Planners

5th Ave S & Midway Blvd
Fort Dodge Traffic Signal Improvements
Traffic Counts
Fort Dodge, Iowa

File Name : 114.0451_-_Fort_Dodge_Signals_-_5th_&_Midway_183486_09-04-2014
Site Code : 5th Ave S & Midway Blvd
Start Date : 9/4/2014
Page No : 1

Groups Printed- Car - Truck

	5th Ave S Westbound			Midway Blvd Northbound			5th Ave S Eastbound			
Start Time	Left	Thru	App. Total	Left	Right	App. Total	Thru	Right	App. Total	Int. Total
07:00 AM	3	72	75	7	0	7	73	22	95	177
07:15 AM	3	81	84	10	1	11	77	29	106	201
07:30 AM	3	133	136	6	0	6	84	19	103	245
07:45 AM	5	118	123	6	1	7	87	25	112	242
Total	14	404	418	29	2	31	321	95	416	865
08:00 AM	3	76	79	8	2	10	86	16	102	191
08:15 AM	1	83	84	11	2	13	69	15	84	181
08:30 AM	2	111	113	16	1	17	77	12	89	219
08:45 AM	1	75	76	15	0	15	49	20	69	160
Total	7	345	352	50	5	55	281	63	344	751
09:00 AM	2	76	78	19	1	20	59	10	69	167
09:15 AM	3	77	80	22	1	23	57	14	71	174
09:30 AM	1	77	78	23	3	26	80	11	91	195
09:45 AM	2	81	83	9	2	11	52	12	64	158
Total	8	311	319	73	7	80	248	47	295	694
10:00 AM	3	62	65	19	1	20	62	19	81	166
10:15 AM	3	76	79	22	3	25	70	14	84	188
10:30 AM	2	66	68	16	2	18	75	13	88	174
10:45 AM	3	86	89	16	2	18	59	23	82	189
Total	11	290	301	73	8	81	266	69	335	717
11:00 AM	5	70	75	18	0	18	64	19	83	176
11:15 AM	0	73	73	16	4	20	80	10	90	183
11:30 AM	0	101	101	15	1	16	67	16	83	200
11:45 AM	3	88	91	22	1	23	83	24	107	221
Total	8	332	340	71	6	77	294	69	363	780
12:00 PM	0	112	112	27	3	30	72	21	93	235
12:15 PM	2	78	80	20	1	21	91	17	108	209
12:30 PM	2	71	73	14	1	15	104	26	130	218
12:45 PM	0	84	84	11	2	13	93	21	114	211
Total	4	345	349	72	7	79	360	85	445	873
01:00 PM	3	67	70	18	1	19	120	19	139	228
01:15 PM	2	103	105	13	1	14	79	23	102	221
01:30 PM	0	73	73	22	3	25	99	18	117	215
01:45 PM	4	71	75	14	1	15	90	9	99	189
Total	9	314	323	67	6	73	388	69	457	853
02:00 PM	1	65	66	12	2	14	99	15	114	194
02:15 PM	5	74	79	17	1	18	104	14	118	215
02:30 PM	1	78	79	13	1	14	111	17	128	221
02:45 PM	2	92	94	24	2	26	77	17	94	214
Total	9	309	318	66	6	72	391	63	454	844
03:00 PM	3	75	78	18	3	21	98	24	122	221
03:15 PM	0	72	72	18	1	19	81	21	102	193
03:30 PM	1	85	86	28	1	29	104	20	124	239
03:45 PM	0	111	111	17	2	19	117	24	141	271
Total	4	343	347	81	7	88	400	89	489	924
04:00 PM	0	94	94	27	0	27	114	19	133	254
04:15 PM	3	89	92	21	3	24	114	22	136	252
04:30 PM	2	102	104	30	2	32	93	17	110	246
04:45 PM	1	84	85	19	2	21	92	14	106	212
Total	6	369	375	97	7	104	413	72	485	964
05:00 PM	2	149	151	21	1	22	117	23	140	313
05:15 PM	1	102	103	21	1	22	89	19	108	233

5th Ave S & Midway Blvd
Fort Dodge Traffic Signal Improvements
Traffic Counts
Fort Dodge, Iowa

File Name : 114.0451_-_Fort_Dodge_Signals_-_5th_&_Midway_183486_09-04-2014
Site Code : 5th Ave S & Midway Blvd
Start Date : 9/4/2014
Page No : 2

Groups Printed- Car - Truck

	5th Ave S Westbound			Midway Blvd Northbound			5th Ave S Eastbound			
Start Time	Left	Thru	App. Total	Left	Right	App. Total	Thru	Right	App. Total	Int. Total
05:30 PM	3	102	105	22	1	23	99	21	120	248
05:45 PM	2	80	82	26	1	27	77	28	105	214
Total	8	433	441	90	4	94	382	91	473	1008
Grand Total	88	3795	3883	769	65	834	3744	812	4556	9273
Apprch %	2.3	97.7		92.2	7.8		82.2	17.8		
Total %	0.9	40.9	41.9	8.3	0.7	9	40.4	8.8	49.1	
Car	61	3422	3483	721	47	768	3393	753	4146	8397
% Car	69.3	90.2	89.7	93.8	72.3	92.1	90.6	92.7	91	90.6
Truck	27	373	400	48	18	66	351	59	410	876
% Truck	30.7	9.8	10.3	6.2	27.7	7.9	9.4	7.3	9	9.4

5th Ave S & Midway Blvd
Fort Dodge Traffic Signal Improvements
Traffic Counts
Fort Dodge, Iowa

File Name : 114.0451_-_Fort_Dodge_Signals_-_5th_&_Midway_183486_09-04-2014
Site Code : 5th Ave S & Midway Blvd
Start Date : 9/4/2014
Page No : 3

	5th Ave S Westbound			Midway Blvd Northbound			5th Ave S Eastbound			
Start Time	Left	Thru	App. Total	Left	Right	App. Total	Thru	Right	App. Total	Int. Total
Peak Hour Analysis From 07:00 AM to 09:45 AM - Peak 1 of 1										
Peak Hour for Entire Intersection Begins at 07:15 AM										
07:15 AM	3	81	84	**10**	1	**11**	77	**29**	106	201
07:30 AM	3	**133**	**136**	6	0	6	84	19	103	**245**
07:45 AM	**5**	118	123	6	1	7	**87**	25	**112**	242
08:00 AM	3	76	79	8	**2**	10	86	16	102	191
Total Volume	14	408	422	30	4	34	334	89	423	879
% App. Total	3.3	96.7		88.2	11.8		79	21		
PHF	.700	.767	.776	.750	.500	.773	.960	.767	.944	.897

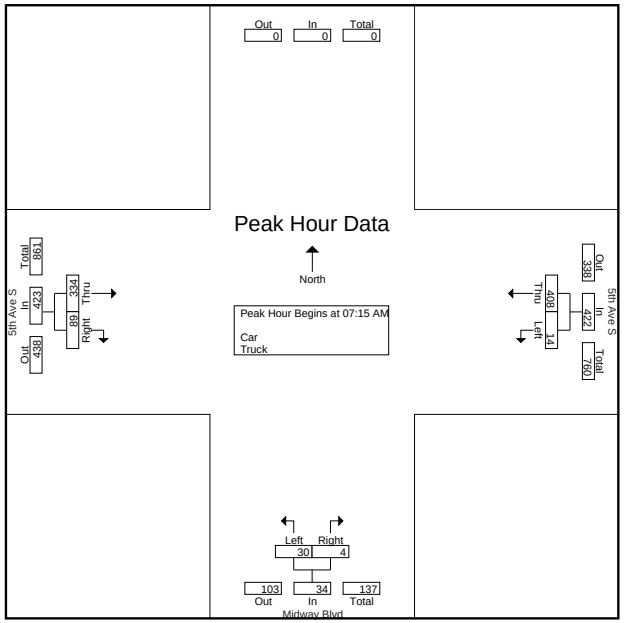

5th Ave S & Midway Blvd
Fort Dodge Traffic Signal Improvements
Traffic Counts
Fort Dodge, Iowa

File Name : 114.0451_-_Fort_Dodge_Signals_-_5th_&_Midway_183486_09-04-2014
Site Code : 5th Ave S & Midway Blvd
Start Date : 9/4/2014
Page No : 4

	5th Ave S Westbound			Midway Blvd Northbound			5th Ave S Eastbound			
Start Time	Left	Thru	App. Total	Left	Right	App. Total	Thru	Right	App. Total	Int. Total
Peak Hour Analysis From 10:00 AM to 01:45 PM - Peak 1 of 1										
Peak Hour for Entire Intersection Begins at 11:45 AM										
11:45 AM	**3**	88	91	22	1	23	83	24	107	221
12:00 PM	0	**112**	**112**	**27**	**3**	**30**	72	21	93	**235**
12:15 PM	2	78	80	20	1	21	91	17	108	209
12:30 PM	2	71	73	14	1	15	**104**	**26**	**130**	218
Total Volume	7	349	356	83	6	89	350	88	438	883
% App. Total	2	98		93.3	6.7		79.9	20.1		
PHF	.583	.779	.795	.769	.500	.742	.841	.846	.842	.939

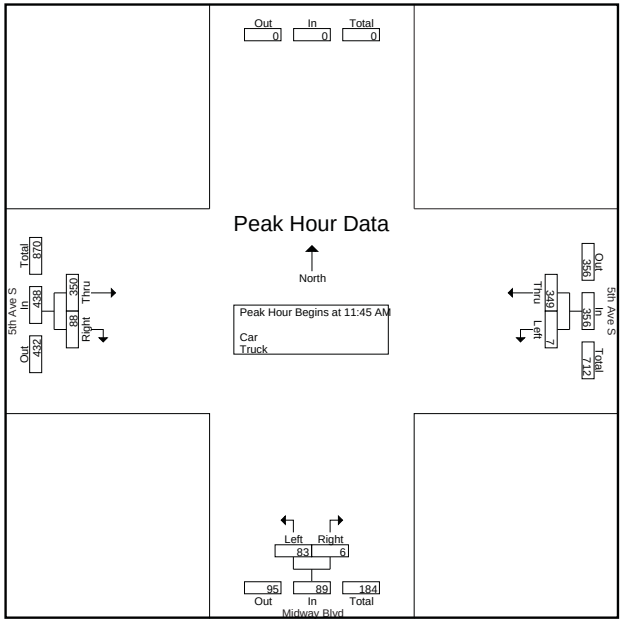

5th Ave S & Midway Blvd
Fort Dodge Traffic Signal Improvements
Traffic Counts
Fort Dodge, Iowa

File Name : 114.0451_-_Fort_Dodge_Signals_-_5th_&_Midway_183486_09-04-2014
Site Code : 5th Ave S & Midway Blvd
Start Date : 9/4/2014
Page No : 5

	5th Ave S Westbound			Midway Blvd Northbound			5th Ave S Eastbound			
Start Time	Left	Thru	App. Total	Left	Right	App. Total	Thru	Right	App. Total	Int. Total
Peak Hour Analysis From 02:00 PM to 05:45 PM - Peak 1 of 1										
Peak Hour for Entire Intersection Begins at 03:45 PM										
03:45 PM	0	**111**	**111**	17	2	19	**117**	**24**	**141**	**271**
04:00 PM	0	94	94	27	0	27	114	19	133	254
04:15 PM	**3**	89	92	21	**3**	24	114	22	136	252
04:30 PM	2	102	104	**30**	2	**32**	93	17	110	246
Total Volume	5	396	401	95	7	102	438	82	520	1023
% App. Total	1.2	98.8		93.1	6.9		84.2	15.8		
PHF	.417	.892	.903	.792	.583	.797	.936	.854	.922	.944

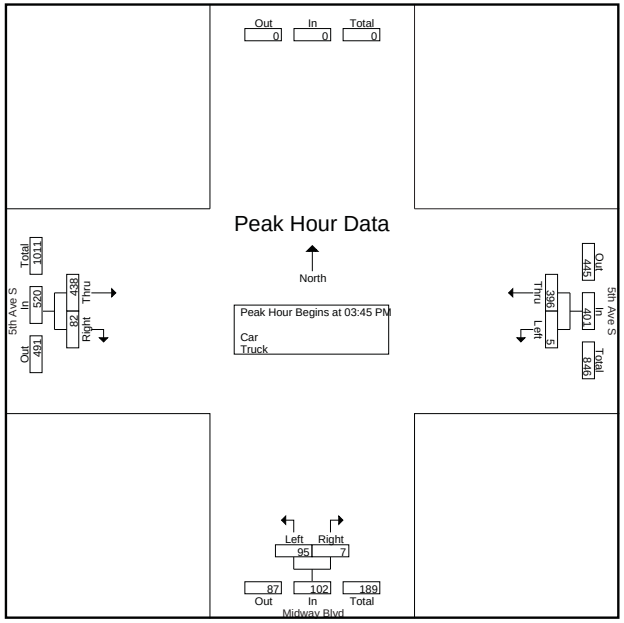

Intersection Crash Summary

Location:	Midway Blvd and 5th Ave S		
City/County:	Fort Dodge, Webster County		
Time Period:	2004-May 2014	Crash Period =	10.5 years
Prepared by:	OMV		

NUMBER OF CRASHES

0	Fatal Crashes	0 fatalities	0	injuries
0	Major Injury Crashes		0	injuries
3	Minor Injury Crashes		3	injuries
4	Possible/Unknown Injury Crashes		9	injuries
21	Property Damage Only Crashes			
Totals: 28	Crashes	0 fatalities	12	injuries

CRASH RATES

Total Crash Rate =	28	/	45.99 MEV	=	0.61 Total Crashes/MEV
Fatal Crash Rate =	0	/	45.99 MEV	=	0.00 Fatal Crashes/MEV
Fatal/Injury Crash Rate =	7	/	45.99 MEV	=	0.15 F & I Crashes/MEV

CRASH FREQUENCY

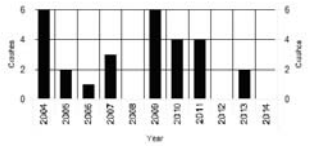

CRASH TYPE

			Non Vehicle Collision Type
0 Head-on	1 Sideswipe, Same Direction		0 Pedestrian
5 Rear-end Crash	0 Sideswipe, Opposite Direction		0 Bicycle
19 Broadside/Right angle Crash	0 Parked		0 Fixed Object
3 Angle, Oncoming Left Turn	0 Other		
0 Backing	0 Unknown		

TRAFFIC - AADT

North Approach =	0
South Approach =	5000
East Approach =	9000
West Approach =	10000
Million Entering Vehicles (MEV) =	45.99

Notes:
Estimated

J:\2014_Projects\114.0451\Engineering\Traffic\Crash\MidwayBlvdand5thAveS-Crash Summary Form.xlsx 9/10/2014

5th Ave S & Midway Blvd

2004 - 2013 Reportable Crashes

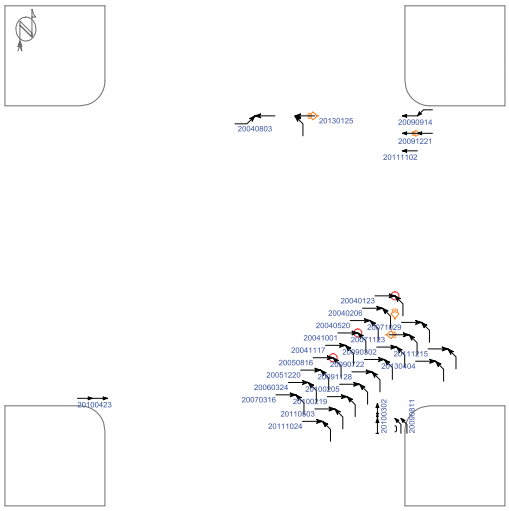

(0) crashes could not be placed in this schematic

Straight	Parked	Pedestrian	Fixed objects:
Stopped	Erratic	Bicycle	General / Pole
Unknown	Out of control	Injury	Signal / Curb
Backing	Right turn	Fatality	Tree / Animal
Overtaking	Left turn	Nighttime	3rd vehicle
Sideswipe	U-turn	DUI	Extra data

Pd' Programming, Inc. 02/24/2015

Iowa Department of Transportation

Major Cause Summary

Midway Blvd and 5th Ave S

Report Version: v.1 Jan 2005

Analysis Years: 2004 [0], 2005 [2], 2006 [1], 2007 [3], 2009 [0], 2010 [4], 2011 [4], 2013 [2]

Crash Summary:

Fatal	-
Major Injury	-
Minor Injury	3
Possible/Unknown	4
PDO	21
Total Crashes	28

Injury Summary:

Fatal	-
Major Injury	-
Minor Injury	3
Possible	8
Unknown	1
Total Injuries	12

Surface Condition Summary:

Dry	20
Wet	5
Ice	-
Snow	3
Slush	-
Sand/Dirt/Oil/Gravel	-
Water	-
Other	-
Unknown	-
Not Reported	-
Total Crashes	28

TOT Property Damage: $160,950
AVG Property Damage: $5,748

Major Cause Summary:

	Animal		Improper Backing
	Ran Traffic Signal		Illegally Parked/Unattended
	Ran Stop Sign		Swerving/Evasive Action
	Crossed Centerline		Over-Correcting/Over-Steering
	FTYROW: At Uncontrolled Intersection		Downhill Runaway
	FTYROW: Making Right Turn on Red Signal		Equipment Failure
16	FTYROW: From Stop Sign		Separation of Units
	FTYROW: From Yield Sign		Ran Off Road - Right
5	FTYROW: Making Left Turn		Ran Off Road - Straight
	FTYROW: From Driveway		Ran Off Road - Left
	FTYROW: From Parked Position		Lost Control
	FTYROW: To Pedestrian		Inattentive/Distracted By: Passenger
1	FTYROW: Other (explain in narrative)		Inattentive/Distracted By: Use of Phone or Other
	Traveling Wrong Way or on Wrong Side of Rd		Inattentive/Distracted By: Fallen Object
1	Driving Too Fast for Conditions		Inattentive/Distracted By: Fatigued/Asleep
	Exceeded Authorized Speed	1	Other: Vision Obstructed
	Made Improper Turn		Oversized Load/ Oversized Vehicle
	Improper Lane Change		Cargo/Equipment Loss or Shift
1	Followed Too Close	1	Other: Other Improper Action
	Disregarded Railroad Signal	2	Unknown
	Disregarded Warning Sign		Other: No Improper Action
	Operating Vehicle in Reckless/Aggressive Manner		None Indicated

Selection Filter:
None

Analyst: OMV **Notes:** Radius=150'

7/21/2014 **Crash Mapping Analysis Tool** **Page:** 1 of 1

Iowa Department of Transportation

Driver and Time Summary

Midway Blvd and 5th Ave S

Report Version: v.1 Aug 2005

Crash Time of Day Summary:

From / To	00:00 01:59	02:00 03:59	04:00 05:59	06:00 07:59	08:00 09:59	10:00 11:59	12:00 13:59	14:00 15:59	16:00 17:59	18:00 19:59	20:00 21:59	22:00 23:59	NR	Total	%
SUN	-	-	-	-	-	-	-	-	-	-	-	-	-		
MON	-	-	-	-	-	1	-	1	3	-	-	-	-	5	18
TUE	-	-	-	1	1	-	2	2	-	-	-	-	-	6	21
WED	-	-	-	-	-	1	1	1	-	-	-	-	-	3	11
THU	-	-	-	-	1	-	-	1	1	-	-	-	-	3	11
FRI	-	-	1	2	-	3	1	1	1	1	-	-	-	10	36
SAT	-	-	-	-	-	-	1	-	-	-	-	-	-	1	4
Tot.			1	3	2	5	5	6	5	1				28	
%			4	11	7	18	18	21	18	4					100

Driver Age/Gender Summary:

Age	Male	Female	NR	Drivers	%
<14	-	-	-		
14	-	-	-		
15	-	-	-		
16	-	1	-	1	2
17	-	1	-	1	2
18	1	-	-	1	2
19	1	1	-	2	4
20	1	1	-	2	4
21 to 24	1	-	-	1	2
25 to 29	5	4	-	9	16
30 to 34	1	-	-	1	2
35 to 39	2	-	-	2	4
40 to 44	7	1	-	8	14
45 to 49	2	3	-	5	9
50 to 54	2	1	-	3	5
55 to 59	2	4	-	6	11
60 to 64	2	3	-	5	9
65 to 69	2	1	-	3	5
70 to 74	1	1	-	2	4
75 to 79	-	-	-		
80 to 84	3	-	-	3	5
85 to 89	1	-	-	1	2
90 to 94	-	-	-		
95 plus	-	-	-		
NR	-	-	-		
Drivers	34	22	0	56	
%	61	39	0		100

Drug/Alcohol Summary:

Drug	Total	%
Alcohol, Less than Statutory		
Alcohol, Statutory		
Drug/Alcohol, Less than Statutory		
Drug/Alcohol, Statutory		
Refused		
Under Influence of Alc/Drugs/Meds		
None Indicated	28	100
Total Crashes	28	100

Fixed Object Struck Summary:

	Vehs.	%
Bridge/Bridge rail/Overpass		
Underpass/Structure Support		
Culvert		
Ditch/Embankment		
Curb/Island/Raised Median		
Guardrail		
Concrete Barrier		
Tree		
Pole - Utility/Light/Etc		
Sign Post		
Mailbox		
Impact Attenuator		
Other Fixed Object		
None	56	100
Total Vehicles	56	100

Selection Filter:
None

Analyst: OMV **Notes:** Radius=150'

7/21/2014 **Crash Mapping Analysis Tool** **Page:** 1 of 1

Signal Warrants - Summary

Major Street Approaches

Eastbound: **5th Ave S**
Number of Lanes: **1**
85% Speed < 40 MPH.
Total Approach Volume: **4,556**

Westbound: **5th Ave S**
Number of Lanes: **1**
85% Speed < 40 MPH.
Total Approach Volume: **3,883**

Minor Street Approaches

Northbound: **Midway Blvd**
Number of Lanes: **1**
Total Approach Volume: **834**

Southbound: **Midway Blvd**
Number of Lanes: **1**
Total Approach Volume: **0**

Warrant Summary (Urban values apply.)

Warrant 1 - Eight Hour Vehicular Volumes ..... **Not Satisfied**

Warrant 1A - Minimum Vehicular Volume ..... **Not Satisfied**
Required volumes reached for 0 hours, 8 are needed

Warrant 1B - Interruption of Continuous Traffic ..... **Not Satisfied**
Required volumes reached for 4 hours, 8 are needed

Warrant 1 A&B - Combination of Warrants ..... **Not Satisfied**
Required volumes reached for 0 hours, 8 are needed

Warrant 2 - Four Hour Volumes ..... **Not Satisfied**
Number of hours (0) volumes exceed minimum < minimum required (4).

Warrant 3 - Peak Hour ..... **Satisfied**

Warrant 3A - Peak Hour Delay ..... **Satisfied**
Number of hours (2) volumes exceed minimum >= required (1). Delay data not evaluated.

Warrant 3B - Peak Hour Volumes ..... **Not Satisfied**
Volumes do not exceed minimums for any hour.

Warrant 4 - Pedestrian Volumes ..... **Not Evaluated**

Warrant 5 - School Crossing ..... **Not Evaluated**

Warrant 6 - Coordinated Signal System ..... **Not Evaluated**

Warrant 7 - Crash Experience ..... **Satisfied**
Number of accidents (6) is more than minimum (5) and volume requirements are met.

Warrant 8 - Roadway Network ..... **Not Satisfied**
Major Route conditions not met. One or more volume requirement met.

Warrant 9 - Intersection Near a Grade Crossing ..... **Not Evaluated**

Signal Warrants - Summary

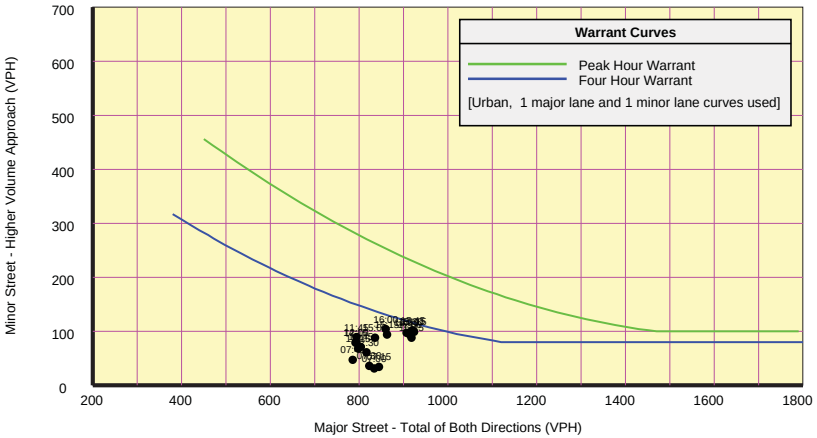

Analysis of 8-Hour Volume Warrants:

War 1A-Minimum Volume

Hour Begin	Major Total	Minor Vol	Minor Dir	Maj 500	Min 150
16:15	924	99	NB	Yes	No
15:45	921	102	NB	Yes	No
16:45	918	88	NB	Yes	No
15:30	917	99	NB	Yes	No
17:00	914	94	NB	Yes	No
16:30	907	97	NB	Yes	No
15:15	863	94	NB	Yes	No
16:00	860	104	NB	Yes	No
07:15	845	34	NB	Yes	No
15:00	836	88	NB	Yes	No
07:00	834	31	NB	Yes	No
07:30	823	36	NB	Yes	No
12:30	817	61	NB	Yes	No
12:45	804	71	NB	Yes	No
12:15	798	68	NB	Yes	No
12:00	794	79	NB	Yes	No
11:45	794	89	NB	Yes	No
14:15	792	79	NB	Yes	No
07:45	786	47	NB	Yes	No
13:00	780	73	NB	Yes	No
11:30	775	90	NB	Yes	No
14:45	772	95	NB	Yes	No
14:00	772	72	NB	Yes	No
14:30	769	80	NB	Yes	No

War 1B-Interruption of Traffic

Hour Begin	Major Total	Minor Vol	Minor Dir	Maj 750	Min 75
16:15	924	99	NB	Yes	Yes
15:15	863	94	NB	Yes	Yes
14:15	792	79	NB	Yes	Yes
11:15	750	89	NB	Yes	Yes
07:15	845	34	NB	Yes	No
07:00	834	31	NB	Yes	No
07:30	823	36	NB	Yes	No
13:00	780	73	NB	Yes	No
14:00	772	72	NB	Yes	No
13:45	758	61	NB	Yes	No
13:15	751	68	NB	Yes	No
13:30	741	72	NB	No	No
11:00	703	77	NB	No	Yes
08:00	696	55	NB	No	No
10:45	676	72	NB	No	No
08:15	662	65	NB	No	No
10:30	648	74	NB	No	No
10:15	648	79	NB	No	Yes
08:30	645	75	NB	No	Yes
10:00	636	81	NB	No	Yes

War 1C-Combination of Warrants

Hour Begin	Major Total	Minor Vol	Minor Dir	Maj 600	Min 120
16:15	924	99	NB	Yes	No
15:45	921	102	NB	Yes	No
16:45	918	88	NB	Yes	No
15:30	917	99	NB	Yes	No
17:00	914	94	NB	Yes	No
16:30	907	97	NB	Yes	No
15:15	863	94	NB	Yes	No
16:00	860	104	NB	Yes	No
07:15	845	34	NB	Yes	No
15:00	836	88	NB	Yes	No
07:00	834	31	NB	Yes	No
07:30	823	36	NB	Yes	No
12:30	817	61	NB	Yes	No
12:45	804	71	NB	Yes	No
12:15	798	68	NB	Yes	No
12:00	794	79	NB	Yes	No
11:45	794	89	NB	Yes	No
14:15	792	79	NB	Yes	No
07:45	786	47	NB	Yes	No
13:00	780	73	NB	Yes	No
11:30	775	90	NB	Yes	No
14:45	772	95	NB	Yes	No
14:00	772	72	NB	Yes	No
14:30	769	80	NB	Yes	No

CLICK TO RETURN TO INDEX PAGE

ENGINEERS & PLANNERS
SNYDER & ASSOCIATES, INC.
IOWA | MISSOURI | NEBRASKA | SOUTH DAKOTA | WISCONSIN

Memorandum

To: Chad Schaeffer, P.E., City of Fort Dodge
Tony Trotter, P.E., City of Fort Dodge

Date: July 29, 2015

From: Todd Knox, P.E., PTOE

CC: Mark Perington, P.E., PTOE
Wade Greiman, P.E.

RE: Communications Network & System Needs
2014 Traffic Systems Improvement Study
S&A Project Number: 114.0451.01

The following documents the existing traffic signal network and recommends modifications to the network for future connectivity to create an overall traffic signal system with remote monitoring capabilities.

Ultimate City Signal Network

The City of Fort Dodge has 33 existing traffic signals. The ultimate goal for the City should be to connect each traffic signal to a city-wide network so engineering or public works staff can control and monitor the traffic signals from a single location. This could be a central control center or integrated into the city IT network, available for authorized personnel. This network would provide for the potential to monitor traffic signal controller operation, malfunction management units (MMUs, conflict monitor), battery back-up systems, and video feeds from video detection cameras and potentially closed-circuit television (CCTV) observation cameras located at intersections. Connection to the city network could give the ability to log/record as much information as the City wants from the traffic signal controllers, and other devices.

Existing Network

The existing signal communications network was reviewed with Steve Mattke on January 28, 2015. The following is a list of intersections connected and the method of connectivity:

- US Hwy 169 & Kenyon Rd (101), US Hwy 169 & Ave O W (102), and Kenyon Rd & Tower Dr (104) via conduit and fiber optic cable
- Kenyon Rd & Ave E (105) and Kenyon Rd & Ave C (106) via conduit and fiber optic cable

- 1st Ave S & S 7th St (209), 1st Ave S & S 8th St (210), and 1st Ave S & S 9th St (211) via conduit and single-mode fiber optic cable
- 1st Ave S & S 15th St (313), Central Ave & 15th St (314), 2nd Ave N & N 15th St (315), 6th Ave N & N 15th St (316), and 7th Ave N & N 15th St (317) via conduit and copper cable
  - The connection between 313 and 314 may be damaged
- 1st Ave S & S 29th St (420), 1st Ave S & S 32nd St (421), and 5th Ave S & S 32nd St (532) via conduit and fiber optic cable
- All signals along 5th Ave S from S 8th St (523) to S 32nd St (532) via conduit and fiber optic cable
  - Conduit and multi-mode fiber optic cable exists east of S 32nd St along 5th Ave S to the Menard Driveway signal (533), however it is not connected to the signal cabinet at S 32nd St
- There are telephone connections to the signal cabinets at 102, 105, 106, 315, and 523.
- The 209, 210, and 211 traffic signals are connected to City Hall via conduit and single-mode fiber optic cable
- Intersections 103, 107, 208, 212, 318, 419, 535, 901, 902, and 903 are not connected. Intersection 419 (1st Ave S & S 25th St) will be connected to 420 and 528 at the completion of all East Region construction phases.

The attached map shows the existing and proposed traffic signal communications network for the City.

Future Signal Communication Network

Traffic signal technology continues to evolve. One evolution has been to integrate into more of an IT network type of communication. This involves assigning IP addresses to traffic signal equipment. Traffic signal controllers, MMUs, video detection, battery back-up systems, and closed circuit video cameras can all be IP addressable at a traffic signal (potentially all signal equipment at the intersection in the future). Most of the existing traffic signal controllers within the City are not capable of being IP addressed and should be replaced. Only 12 of the existing 33 traffic signal controllers have this capability (there will be an additional controller capable following completion of East Region Phase 2 construction). As the existing video detection systems are replaced, new systems should have this capability, whether it is each camera or central cabinet equipment.

Of the 12 existing and one additional traffic signal controllers that are IP compatible, there are three different manufacturers: Econolite, PEEK, and Siemens (Eagle). Of these, there are six Siemens, four Econolite, and three PEEK controllers. These may need software/firmware updates to become IP compatible. Controllers typically only fully communicate with others from the same manufacturer. These controllers are standard NEMA controllers, so the controllers can be relocated from one cabinet to another and reprogrammed as needed for the same controllers to be installed along a corridor. With potentially replacing so many controllers, it may be advisable to select a single manufacturer and

proceed forward with only one particular brand. The other controllers can be used until they need to be replaced.

Single-mode fiber optic cable provides for the most efficient manner of sending high bandwidth communication transmissions from control cabinets for City uses. Communication through the existing multi-mode and copper cable can handle data transmission from all the devices lists previously; however, the video quality will be reduced. It is recommended that any new or replacement of communications cable be done with single-mode fiber. On long segments between signals, wireless communication will provide adequate transmission of data and saves on aerial cable or underground construction costs.

Proposed Signal Connectivity

The City currently has phone connectivity to the majority of their signal networks, only the three signals near City Hall have a fiber connection to the building. Each phone connection likely costs the City money each month and is used infrequently. A fully connected signal network via conduit and cable to a City building would provide a potential connection into the City IT network and allow for the phone connections to be removed, which also improves communication speed and reliability.

To make these connections between the existing segments, there are a few ways to complete them. One way is to continue with conduit and fiber optic cable, mostly multi-mode. Multi-mode fiber optic cable has been typically used for signal systems, however, is being phased out to single-mode fiber optic cable. Single-mode can transmit more data over a greater distance, and is better for transmitting video feeds. Single-mode is more commonly manufactured and readily available. In general single mode fiber-optic cable is connected to each cabinet, then an Ethernet switch is installed which then allows for connectivity to multiple IP addressable pieces of equipment in the cabinet.

For isolated intersections and separated corridors, wireless communication may be a better and lower cost option. Wireless communication would require an antenna at both the sending and receiving locations and the necessary communication equipment/cable (fiber optic communication would require necessary comm. equipment). The wireless signal would not have to be sent directly to an adjacent traffic signal. The wireless signal could be routed to a location with existing wireless equipment, such as water towers. Once the distance between intersections or intersection and termination is 500 ft to 1,000 ft, wireless communication becomes a lower cost option. Although it is usually typical to test communications to insure there are not line of sight issues or blockages in the path of the signal before final design/installation.

The isolated intersections of 107, 318, 535, 901, and 902 could be connected to the network via wireless communications. Intersection 103 could be connected wirelessly, but since 102 already has fiber optic connections, 103 should be connected through fiber optic cable. Intersections 104 and 105 can be

connected via fiber optic cable (wireless communication not recommended as a direct line would be through three-story buildings); however, another option would be to connect each intersection wirelessly to the City water tower located south of the 104 intersection.

As a part of the Cross-Town Connector project, conduit was extended towards the 208 intersection. The segment of conduit west of S 5th St would need to be installed as well as the single-mode fiber from S 7th St. The same project installed conduit east of S 9th St along 1st Ave S to S 13th St. Intersection 212 can be connected to that conduit at the 1st Ave S & S 12th St intersection. The intersections along 15th St can be connected to the same conduit at the 1st Ave S & S 13th St intersection. Single-mode fiber would have to be installed to the 1st Ave S & S 9th St (211) intersection.

If the 1st Ave S & S 15th St intersection is connected to the network west along 1st Ave S, then S 15th St would be a good location to route fiber optic cable south to tie into the 5th Ave S network. Since fiber optic cable will be routed in three directions at each intersection along S 15th St (1st Ave S & 5th Ave S), it is recommended to install a fiber optic hub cabinet at each intersection to aid in terminating/splicing fibers as needed. Since 5th Ave S likely has multi-mode fiber optic cable, additional IT equipment may be necessary in the hub cabinet at 5th Ave S & S 15th St (525) to convert the transmission from single-mode to multi-mode.

These recommended improvements would connect all traffic signals and pedestrian crossings to the City IT network with a single point of connectivity. It is advisable to install a second connection to the City network along 5th Ave S, preferably at the east end, near 5th Ave S & S 32nd St (532). This would allow for redundant connectivity if the fiber cable was damaged/disconnected between City Hall and the intersection. This can be accomplished by installing wireless communication and routed to the network at a water tower. The 5th Ave S & S 32nd St intersection would be a good location for another fiber optic hub cabinet due to the signal being routed three directions and potential wireless connection to the City network.

At the completion of the East Region Project, the intersection of 5th Ave S & S 25th St (528) will have fiber approaching from three directions. This would be another location for a fiber hub cabinet. As with the 5th Ave S & S 15th St (525), this intersection may need additional IT equipment to convert signal transmission from multi-mode to single-mode.

As mentioned before, CCTV cameras could be installed and connected to the network. These would be helpful in monitoring traffic conditions around the city by Engineering staff as well as Police and Fire Departments. Some local agencies have installed CCTV cameras at every traffic signal. Many times traffic signals are close enough together that installing these cameras at select locations is sufficient for City use. These select locations are typically at higher volume intersections. Potential locations are (by intersection number) 101, 313, 318, 419, 421, 523, 525, 529, 532, and 542. The 20th Ave N & N 15th St

(318) intersection isn't a high volume intersection, but a CCTV camera at this location may aid in monitoring traffic conditions during the State Softball Tournament.

Once the signals and equipment are connected to a management location, typically software on computer(s) from the equipment manufacturer is utilized to communicate with the devices. CCTV cameras can come with viewing and controlling software, but signal controllers tend to be managed by more robust software. Each signal controller manufacturer charges cities to purchase and maintain such managing software. Purchasing cost for single software could be $50,000. Since the City has three different controller manufacturers, costs for the signal management software could get expensive. Plus each software functions differently, so unless staff is familiar with and utilizes each on a regular basis, maintaining the signals on each software may be difficult. This would be an additional reason to select a single controller manufacturer.

Adaptive Signal Control Technology

Adaptive signal control technology (ASCT) is a technology that can adjust traffic signal timings based on current traffic flow. ASCT needs a connected network for adjacent signals to communicate fully to adjust and keep coordinated.

ASCT also needs robust signal operations at each intersection. This includes full and consistent detection. The more information available to the ASCT system, the better the system will be able to adapt to the current situation. Depending on the system, this could mean staff would have to monitor the system and intersections on a weekly basis looking for potential defects in operations, whether it is detection, communication, or any issues with general operation.

Based on the current system, staffing, and predictable traffic conditions, ASCT would not be recommended for installation at this time. As the communication network is installed, ASCT could be revised. If traffic becomes more variable, ASCT could be more responsive to traffic changes.

Funding

There is potential for funding for signal communications network systems. One source is Iowa's Clean Air Attainment Program (ICAAP). This is a federally funded program. ICAAP could provide funding for communications and signal coordination costs. ICAAP funding requires the applicant to show a reduction in air pollution. This could be achieved by reducing the number of stops along a corridor.

ICAAP would be a source for funding for basic traffic signal or ASCT systems. The federal funding on ASCT systems requires completion of a Systems Engineering (SE) study. This SE will help identify the needs and requirements to select the appropriate system. Installation of an ASCT system at a single intersection could be $50,000, not including any communication, detection, or other signal improvements.

Estimated Construction Costs

Below are estimated costs per intersection to achieve the communication network described.

Intersection				Period for Modification		
				Short-Term (0-2 Years)	Mid-Term (2-5 Years)	Long-Term (5-15 Years)
101	US Hwy 169	&	Kenyon Rd	$0	$15,500	$0
102	US Hwy 169	&	Ave O W	$0	$19,500	$0
103	US Hwy 169	&	Triton Circle	$0	$14,300	$0
104	Kenyon Rd	&	Tower Dr	$0	$0	$24,500
105	Kenyon Rd	&	Ave E	$0	$0	$14,000
106	Kenyon Rd	&	Ave C	$0	$0	$20,500
107	2nd Ave S	&	A St	$0	$0	$4,000
208	2nd Ave S	&	S 3rd St	$0	$26,000	$0
209	1st Ave S	&	S 7th St	$0	$0	$0
210	1st Ave S	&	S 8th St	$0	$0	$0
211	1st Ave S	&	S 9th St	$0	$0	$0
212	Central Ave	&	12th St	$0	$13,000	$0
313	1st Ave S	&	S 15th St	$0	$32,000	$0
314	Central Ave	&	15th St	$0	$2,500	$0
315	2nd Ave N	&	N 15th St	$0	$4,000	$0
316	6th Ave N	&	N 15th St	$0	$6,500	$0
317	7th Ave N	&	N 15th St	$0	$6,500	$0
318	20th Ave N	&	N 15th St	$0	$4,000	$0
419	1st Ave S	&	S 25th St	$0	$0	$0
420	1st Ave S	&	S 29th St	$0	$0	$0
421	1st Ave S	&	S 32nd St	$0	$0	$12,000
523	Kenyon Rd	&	S 8th St	$0	$0	$8,000
524	5th Ave S	&	S 12th St	$0	$0	$8,000
525	5th Ave S	&	S 15th St	$0	$0	$8,000
526	5th Ave S	&	S 17th St	$0	$0	$8,000
527	5th Ave S	&	S 21st St	$0	$0	$8,000
528	5th Ave S	&	S 25th St	$0	$0	$8,000
529	5th Ave S	&	S 29th St	$0	$0	$1,500
530	5th Ave S	&	S 30th St	$0	$0	$9,200
531	5th Ave S	&	S 31st St	$0	$0	$1,500
532	5th Ave S	&	S 32nd St	$0	$0	$10,500
533	5th Ave S	&	Menards	$0	$0	$0
535	5th Ave S	&	S 42nd St/P59	$0	$0	$4,000
901	Hawkeye Ave	&	2nd St NW	$0	$0	$4,000
902	N 32nd St	-	11th/12th Ave N	$0	$0	$4,000
903	S 22nd St	@	11th/12th Ave S	$0	$0	$0
Network Improvement Total				$0	$143,800	$157,700

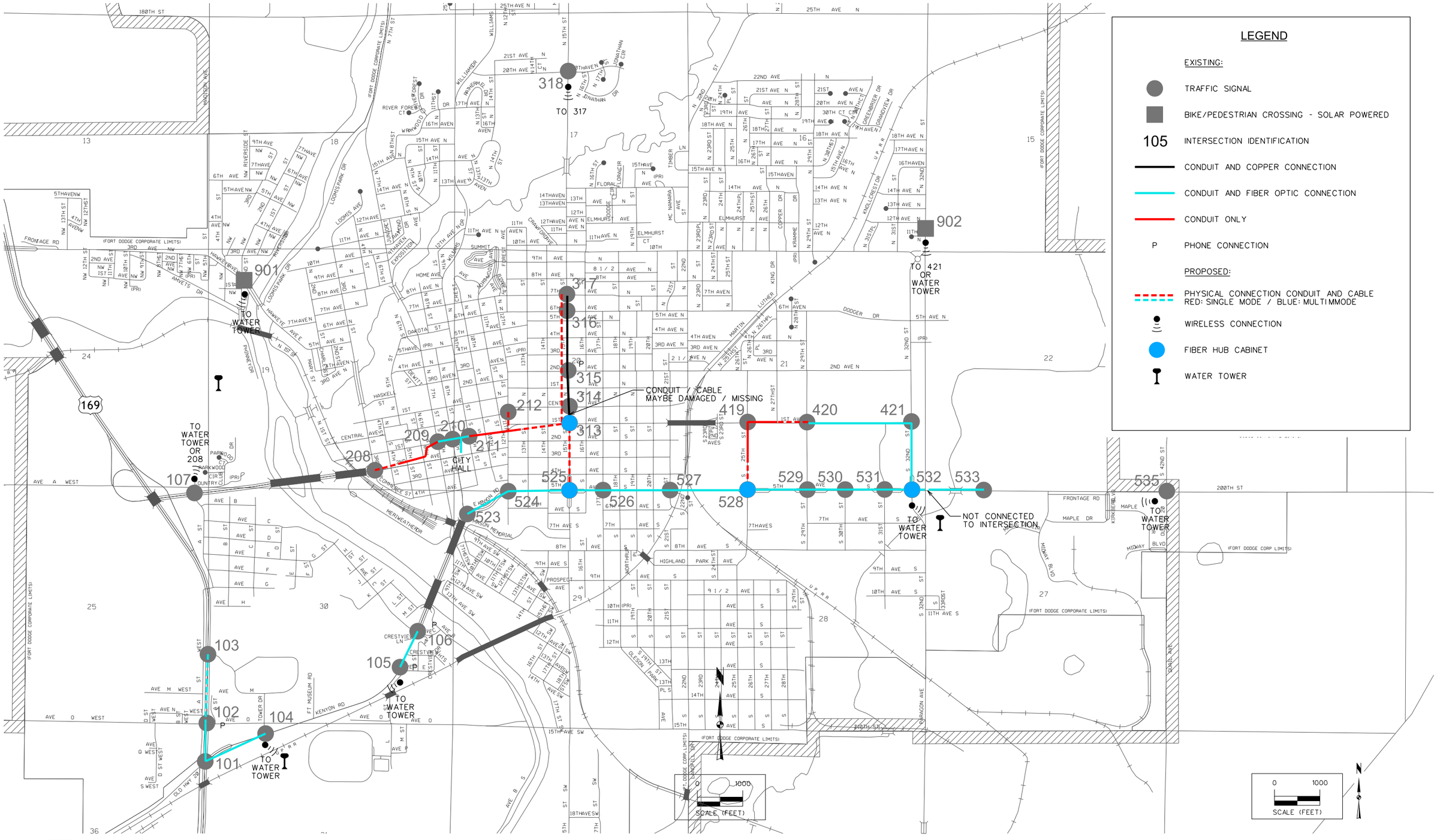

TRAFFIC SIGNAL COMMUNICATIONS NETWORK
FORT DODGE, IOWA

MARCH 09, 2015

SNYDER & ASSOCIATES
Engineers and Planners

Fort Dodge Traffic Signal Inventory
Cost Estimate Summary - Network Improvements

Intersection	Item	Period for Modification		
		Short-Term	Mid-Term	Long-Term
		(0-2 Years)	(2-5 Years)	(5-15 Years)
101 - US Hwy 169 & Kenyon Rd	Replace Controller		$7,500	
	Convert to Single-Mode Communication		$8,000	
Total		$0	$15,500	$0
102 - US Hwy 169 & Ave O W	Replace Controller		$7,500	
	Convert to Single-Mode Communication		$8,000	
	Replace Fiber to Kenyon Rd with Single-Mode		$4,000	
Total		$0	$19,500	$0
103 - US Hwy 169 & Triton Circle	Install Communication Equipment		$8,000	
	Relocate Controller		$300	
	Install Single-Mode Fiber Cable to Ave O W		$6,000	
Total		$0	$14,300	$0
104 - Kenyon Rd & Tower Dr	Replace Controller			$7,500
	Convert to Single-Mode Communication			$8,000
	Replace Fiber to US Hwy 169 with Single-Mode			$5,000
	Install Wireless Comm to Water Tower			$4,000
Total		$0	$0	$24,500
105 - Kenyon Rd & Ave E	Update Firmware in Controller for IP compatibility			$2,000
	Convert to Single-Mode Communication			$8,000
	Install Wireless Comm to Water Tower			$4,000
Total		$0	$0	$14,000
106 - Kenyon Rd & Ave C	Replace Controller			$7,500
	Convert to Single-Mode Communication			$8,000
	Replace Fiber to Ave E with Single-Mode			$5,000
Total		$0	$0	$20,500
107 - 2nd Ave S & A St	Install Wireless Comm to Water Tower or 2nd Ave S & S 3rd St (if not removed)			$4,000
Total		$0	$0	$4,000
Zone 1 Total		$0	$49,300	$63,000

Fort Dodge Traffic Signal Inventory
Cost Estimate Summary - Network Improvements

Intersection	Item	Period for Modification		
		Short-Term	Mid-Term	Long-Term
		(0-2 Years)	(2-5 Years)	(5-15 Years)
208 - 2nd Ave S & S 3rd St	Install Conduit to S 5th St		$15,000	
	Install Single-Mode Fiber to 1st Ave S & S 7th St		$7,000	
	- Assumes signal controller/cabinet are replaced			
	Optional - Install Wireless Comm to communicate with 2nd Ave S & A St		$4,000	
Total		$0	$26,000	$0
209 - 1st Ave S & S 7th St	New Signal in 2014			
Total		$0	$0	$0
210 - 1st Ave S & S 8th St	New Signal in 2014			
Total		$0	$0	$0
210 - 1st Ave S & S 9th St	New Signal in 2014			
Total		$0	$0	$0
212 - Central Ave & 12th St	Install Conduit and Single-Mode Fiber to 1st Ave S & S 9th St		$13,000	
	- Assumes signal controller/cabinet are replaced			
Total		$0	$13,000	$0
Zone 2 Total		$0	$39,000	$0

Fort Dodge Traffic Signal Inventory
Cost Estimate Summary - Network Improvements

Intersection	Item	Period for Modification		
		Short-Term	Mid-Term	Long-Term
		(0-2 Years)	(2-5 Years)	(5-15 Years)
313 - 1st Ave S & S 15th St	Install Conduit to 1st Ave S & S 13th St		$17,000	
	Install Single-Mode Fiber to Central Ave & 12th St		$7,000	
	Install Fiber Optic Hub Cabinet		$8,000	
	- Assumes signal controller/cabinet are replaced			
Total		$0	$32,000	$0
314 - Central Ave & 15th St	Install Conduit and Single-Mode Fiber to 1st Ave S & S 15th St		$2,500	
	- Assumes signal controller/cabinet are replaced			
Total		$0	$2,500	$0
315 - 2nd Ave N & N 15th St	Replace existing twisted-pair copper cable with Single-Mode Fiber in existing conduit to Central Ave & 15th St		$4,000	
	- Assumes signal controller/cabinet are replaced			
Total		$0	$4,000	$0
316 - 6th Ave N & N 15th St	Replace existing twisted-pair copper cable with Single-Mode Fiber in existing conduit to 2nd Ave N & N 15th St		$6,500	
	- Assumes signal controller/cabinet are replaced			
Total		$0	$6,500	$0
317 - 7th Ave N & N 15th St	Replace existing twisted-pair copper cable with Single-Mode Fiber in existing conduit to 6th Ave N & N 15th St		$2,500	
	- Assumes signal controller/cabinet are replaced			
	Install Wireless Comm to communicate with 20th Ave N & N 15th St		$4,000	
Total		$0	$6,500	$0
318 - 20th Ave N & N 15th St	Install Wireless Comm to 7th Ave N & N 15th St including necessary cabinet equipment		$4,000	
Total		$0	$4,000	$0

Zone 3 Total	$0	$55,500	$0

Fort Dodge Traffic Signal Inventory
Cost Estimate Summary - Network Improvements

Intersection	Item	Period for Modification		
		Short-Term	Mid-Term	Long-Term
		(0-2 Years)	(2-5 Years)	(5-15 Years)
419 - 1st Ave S & S 25th St	To be replaced in 2015 - East Region Project			
Total		$0	$0	$0
420 - 1st Ave S & S 29th St	To be replaced in 2016 - East Region Project			
	Connection to 419 & 421 to be included in project			
Total		$0	$0	$0
421 - 1st Ave S & S 32nd St	Upgrade Cabinet Comm Equipment to be IP addressable			$8,000
	Optional - Install Wireless Comm to communicate with N 32nd St Crossing - 11th Ave N			$4,000
Total		$0	$0	$12,000

Zone 4 Total	$0	$0	$12,000

Fort Dodge Traffic Signal Inventory
Cost Estimate Summary - Network Improvements

Intersection	Item	Period for Modification		
		Short-Term (0-2 Years)	Mid-Term (2-5 Years)	Long-Term (5-15 Years)
523 - Kenyon Rd & S 8th St	Upgrade Cabinet Comm Equipment to be IP addressable			$8,000
Total		$0	$0	$8,000
524 - 5th Ave S & S 12th St	Upgrade Cabinet Comm Equipment to be IP addressable			$8,000
Total		$0	$0	$8,000
525 - 5th Ave S & S 15th St	Upgrade Cabinet Comm Equipment to be IP addressable			$8,000
Total		$0	$0	$8,000
526 - 5th Ave S & S 17th St	Upgrade Cabinet Comm Equipment to be IP addressable			$8,000
Total		$0	$0	$8,000
527 - 5th Ave S & S 21st St	Upgrade Cabinet Comm Equipment to be IP addressable			$8,000
Total		$0	$0	$8,000
528 - 5th Ave S & S 25th St	Upgrade Cabinet Comm Equipment to be IP addressable			$8,000
Total		$0	$0	$8,000
529 - 5th Ave S & S 29th St	Terminate existing Multi-Mode Fiber within Cabinet			$1,500
	- Assumes signal controller/cabinet are replaced			
Total		$0	$0	$1,500
530 - 5th Ave S & S 30th St	Connect Equipment to Fiber Cable			$1,500
	Terminate existing Multi-Mode Fiber within Cabinet			$1,200
Total		$0	$0	$2,700
531 - 5th Ave S & S 31st St	Connect Equipment to Fiber Cable			$1,500
	- Assumes signal controller/cabinet are replaced			
Total		$0	$0	$1,500

Fort Dodge Traffic Signal Inventory
Cost Estimate Summary - Network Improvements

Intersection	Item	Period for Modification		
		Short-Term (0-2 Years)	Mid-Term (2-5 Years)	Long-Term (5-15 Years)
532 - 5th Ave S & S 32nd St	Terminate existing Mult-Mode Fiber within Cabinet			$1,500
	- Assumes signal controller/cabinet are replaced			
	Install Fiber Optic Hub Cabinet			$8,000
	Connect Fiber from Menards Drwy to Network			$1,000
Total		$0	$0	$10,500
533 - 5th Ave S & Menards Drwy	None - New in 2014			
Total		$0	$0	$0
535 - 5th Ave S & S 42nd St/Cty Rd P59	Install Wireless Comm to Water Tower including necessary cabinet equipment			$4,000
Total		$0	$0	$4,000

Zone 5 Total	$0	$0	$68,200

Fort Dodge Traffic Signal Inventory
Cost Estimate Summary - Network Improvements

Intersection	Item	Period for Modification		
		Short-Term	Mid-Term	Long-Term
		(0-2 Years)	(2-5 Years)	(5-15 Years)
901 - Hawkeye Ave & 2nd St NW	Install Wireless Comm to Water Tower including necessary cabinet equipment			$4,000
Total		$0	$0	$4,000
902 - N 32nd St Crossing - 11th Ave N	Install Wireless Comm to 421 or Water Tower including necessary cabinet equipment			$4,000
Total		$0	$0	$4,000
903 - S 22nd St Mid-Block Signal	Removed			
Total		$0	$0	$0

Zone 9 Total	$0	$0	$8,000

CLICK TO RETURN TO INDEX PAGE

ENGINEERS & PLANNERS
SNYDER & ASSOCIATES, INC.
IOWA | MISSOURI | NEBRASKA | SOUTH DAKOTA | WISCONSIN

Memorandum

To: Chad Schaeffer, P.E., City of Fort Dodge
Tony Trotter, P.E., City of Fort Dodge

Date: April 17, 2015

From: Todd Knox, P.E., PTOE

CC: Mark Perington, P.E., PTOE
Wade Greiman, P.E.

RE: Traffic Signal Maintenance Program
2014 Traffic Systems Improvement Study
S&A Project Number: 114.0451.01

A yearly maintenance program can be divided into maintenance and inspection program. The following documents a recommended maintenance and/or inspection program for the traffic signals. This information was reviewed with a traffic signal construction/maintenance contractor (Iowa Signal).

Inspection Program

An inspection program takes a close look at various features of the traffic signal to try and identify issues that could impact signal operation prior to anything happening. Inspection would allow the City to prepare for potential impacts or repairs. The following is a list of items to inspect.

1. Signal Cabinets
    a. Duct seal in place
    b. Cooling fan operational
    c. Cabinet lighting operational
2. Controller and Cabinet Equipment
    a. Controller
        i. Clock time matches standard time
        ii. Base and Coordinated Timings
    b. Other Equipment
        i. Detector Amps
            1. Detections being sent properly to controller
            2. Connections are tight and secure
        ii. Load Switches and Flashers
    c. All connections are tight and secure

3. Interconnect Equipment
    a. Cabinet equipment is sending communication signals appropriately
    b. Equipment is receiving necessary signals
4. Traffic Signal Heads
    a. Visibility of lenses (by driving on each approach)
    b. Alignment (has the head remained vertical and plum)
    c. Hardware for rust and/or cracks
    d. Condition of visors and backplates
5. Mast Arms and Poles
    a. Poles/bases/arms for signs of vehicular damage
    b. Rust
    c. Joints and welds for cracks/rust at arm connections and base plates
    d. Anchor bolts for tightness and/or rust
    e. Signal pole vertical sections are remaining vertical
6. Pedestrian Pushbuttons and Signs
    a. Make sure each pushbutton is working properly
        i. Sends indication to cabinet
        ii. Does not stick in call
    b. General condition of the pushbutton and sign
7. Detectors
    a. Inductive loops
        i. Exposed wires within the sawcuts
        ii. Pavement condition (is there cracking that could impact loop detection)
    b. Video Detection
        i. Camera alignment
        ii. Detection Zone placement
        iii. Calls being sent to controller
8. Handholes
    a. Condition of lid and structure

Inspection of these items can be handled with basic tools, truck with a bucket lift, and a signal cabinet key. All conditions should be documented for record and can help determine if any changes occurred between inspections.

Maintenance

While performing the inspection each year at every signal, there are a few maintenance items that should be performed within the signal cabinet. These items are:

1. Lubricate cabinet locks and hinges

2. Clean or replace cabinet filter
3. Remove excess debris from cabinet
4. Bench test conflict monitor (malfunction management unit). Requires spare to install while testing and specialty equipment to test. These are typically not tested.

Iowa Signal indicated that very little routine maintenance is required for most signals. They typically are only called to perform maintenance at traffic signals when there is a failure or a malfunction occurs requiring service. The following are typical items they are called out for to service:

1. Detection, both constant and lack of calls from vehicular or pedestrian detectors
2. Load switch in cabinet fails
3. LED or bulb failure
4. Loose components due to age or weather (in cabinet or on signal poles)
5. Physical damage due to vehicular crash or oversized load
6. Damage due to power surges or lighting. Could result in various cabinet component or controller failure.

Iowa Signal indicated that the frequency they are called for service by cities depends on the age of the signal equipment and physical events such as weather or vehicle impact. Outside of the physical events, they generally are called to an intersection less than once per year.

By Iowa Signal's estimation, the yearly inspection and maintenance could take 4 hours per intersection to complete.